START HERE!

READ ME FIRST

Don't be a hero and muscle through this installation without reading these fitting instructions first! Improper installation of this gear may void certain aspects of your warranty.

Before you begin, take a moment and open all your Front Runner rack kit boxes and gather the assembly instructions for the various components.

A complete kit will contain:

1. A Front Runner Slimsport kit

This document will guide you through the assembly of the mounting system and assist you in fitting the roof rack tray or load bars to your specific vehicle.

Please refer to the next page for a list of all the components, quantities and tools required.

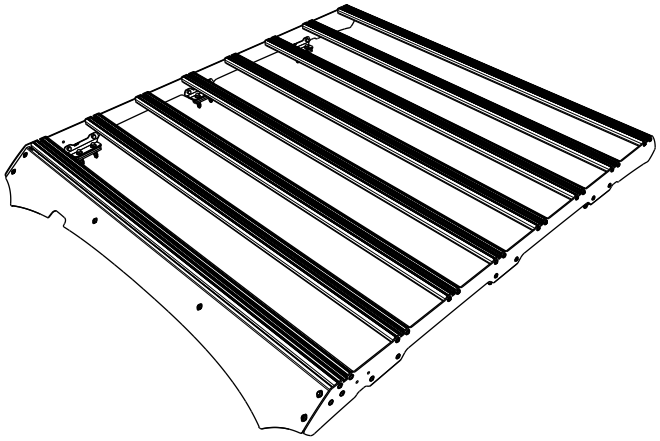

IMPORTANT WARNING! ⚠

IT IS CRITICAL THAT ALL FRONT RUNNER PRODUCTS BE PROPERLY AND SECURELY ASSEMBLED AND ATTACHED TO YOUR VEHICLE. IMPROPER ATTACHMENT COULD RESULT IN AN AUTOMOBILE ACCIDENT, AND COULD CAUSE SERIOUS BODILY INJURY OR DEATH. YOU ARE RESPONSIBLE FOR ASSEMBLING AND SECURING ALL FRONT RUNNER PRODUCTS TO YOUR VEHICLE, CHECKING THE ATTACHMENTS PRIOR TO USE, AND PERIODICALLY INSPECTING THE PRODUCTS FOR ADJUSTMENT, WEAR AND DAMAGE. THEREFORE, YOU MUST READ AND UNDERSTAND ALL OF THE INSTRUCTIONS AND PRECAUTIONS SUPPLIED WITH YOUR FRONT RUNNER PRODUCT PRIOR TO INSTALLATION OR USE. IF YOU DO NOT UNDERSTAND ALL OF THE INSTRUCTIONS AND CAUTIONS, OR IF YOU HAVE NO MECHANICAL EXPERIENCE AND ARE NOT THOROUGHLY FAMILIAR WITH THE INSTALLATION PROCEDURES, YOU SHOULD HAVE THE PRODUCT INSTALLED BY A PROFESSIONAL INSTALLER OR OTHER QUALIFIED PERSONNEL.

NOTE: Front Runner will not be responsible for any damage caused by the failure to install the product according to these instructions.
Please call us if you have any questions about the installation of this product.

 © 2022 FRONT RUNNER VEHICLE OUTFITTERS

1 GET ORGANIZED

IN THE BOX

1	2 X	Foot Rail 1LH + 1RH
2	6 X	Stiffener plates
3	8 X	Standard Slimsport Slat
4	12 X	6mm Spacer
5	12 X	M6x16 Button Head Flange
6	12 X	M6x19x1 Flat Washer
7	12 X	M6 Spring Washer
8	12 X	M6x50 Hex Bolt
9	24 X	M6 Nut Cap
10	12 X	Jack Nut
11	12 X	M6 Nyloc Nut
12	32 X	M6x25 Thread Forming Screw
13	1 X	Installer Wrench
14	2 X	M6x30 Button Head

TOOLS NEEDED

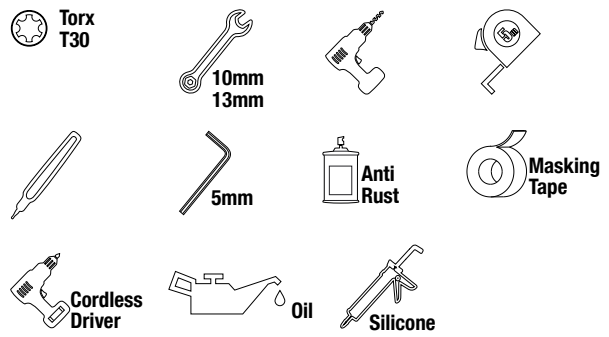

FIGURE 1.1

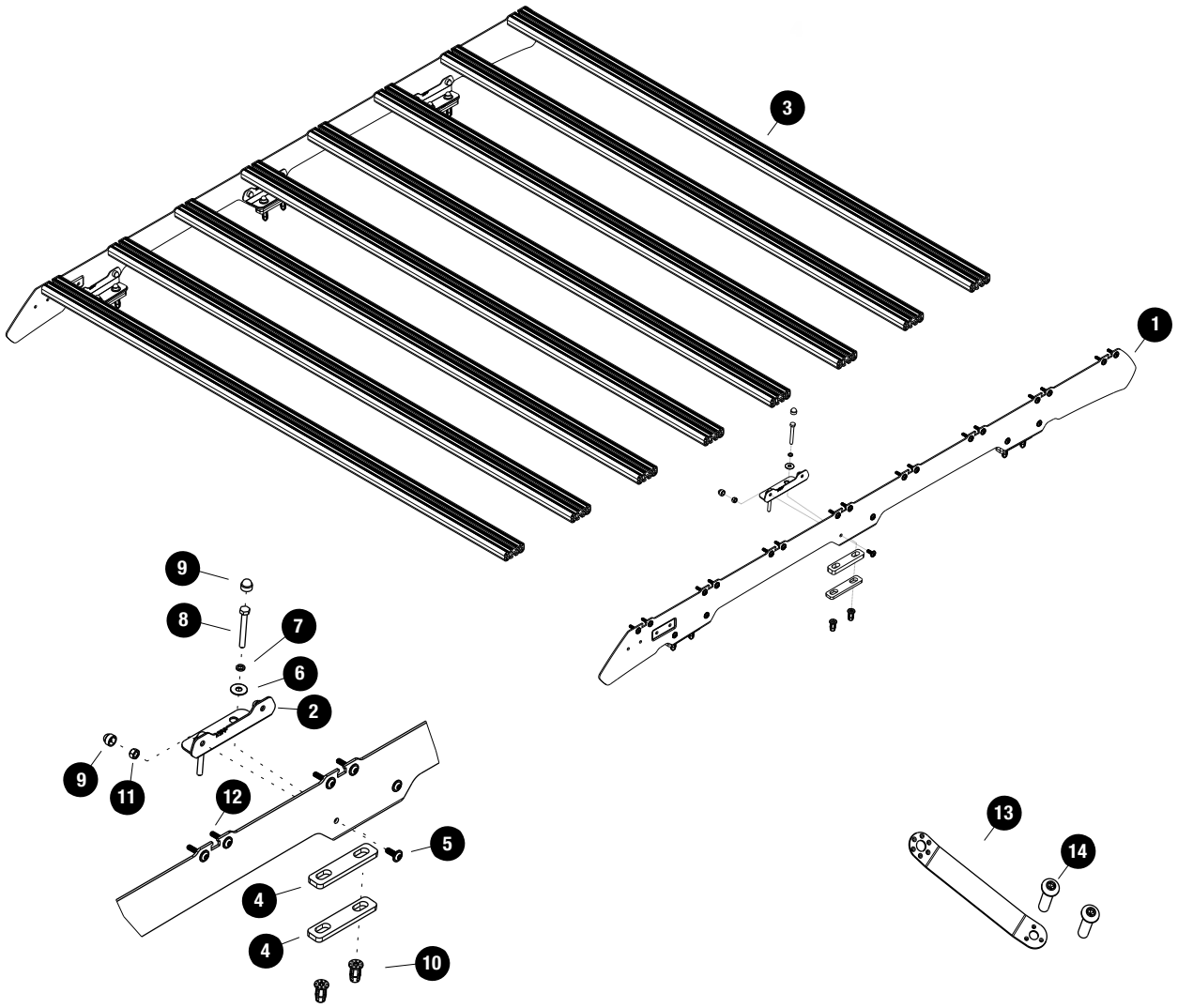

 © 2022 FRONT RUNNER VEHICLE OUTFITTERS

2 FIT AND SECURE

2.1

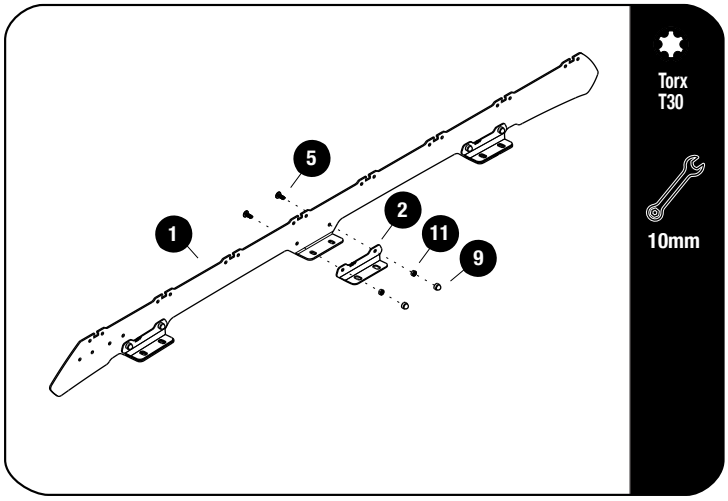

Assemble the Stiffener Pates (Item 2) to the foot rails (Item 1) using M6x16 flange button heads, M6 nyloc nut & M6 nut cap (Items 5, 9 & 11).

Do this to both LH & RH foot rails.

Fully tighten.

2.2

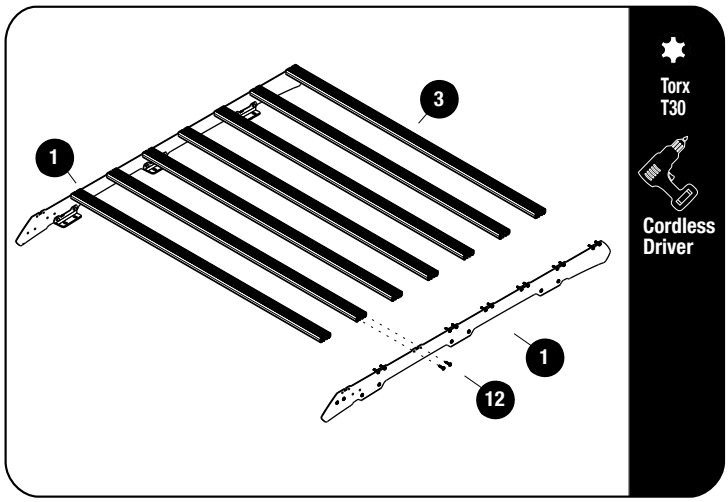

Fit seven Slimsport Slats (Item 3) to foot rails assemblies using M6x25 thread forming screws (Item 12).

.

Note do not fit the Front Slat.

Use a little oil on screw threads before inserting. Note these are Thread Forming Screws.

Tightening Torque 8-10Nm / 5.9 ft lb - 7.38 ft lb. Take care when using a cordless driver.

© 2022 FRONT RUNNER VEHICLE OUTFITTERS

3 FIT AND SECURE

3.1 STANDARD WIND FAIRING ASSEMBLY

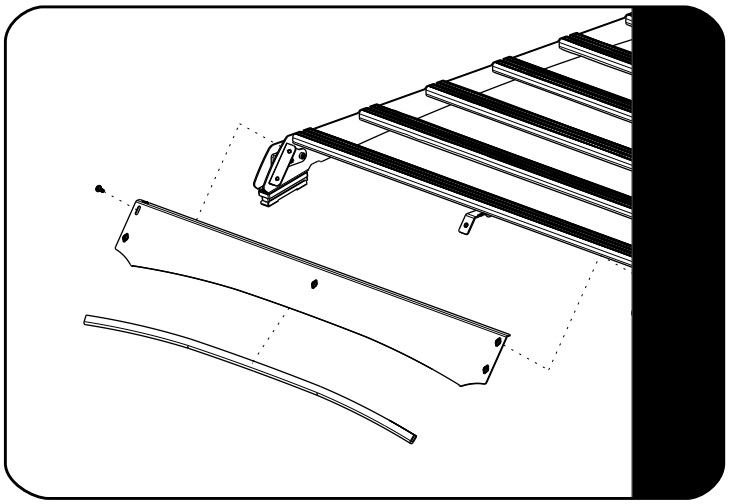

Refer to fitment guide RRAC233

3.2 LIGHT BAR WIND FAIRING ASSEMBLY

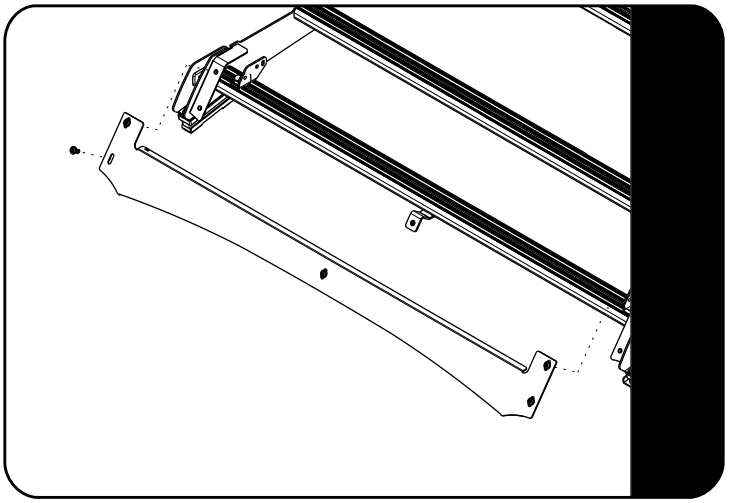

Refer to fitment guide RRAC194

© 2022 FRONT RUNNER VEHICLE OUTFITTERS

4 FIT AND SECURE

4.1

Apply masking tape along the length of the ditch. Locate the rivet on the ditch molding at the rear of the cab.

Measure 200mm toward the front of the vehicle from the center of the rivet. And make a mark in the center of the ditch. This will be the rear hole for the Foot Rail.

4.2

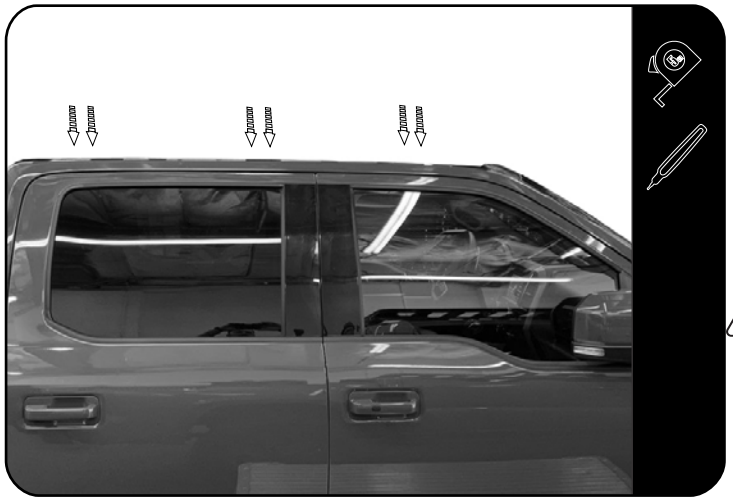

Position the assembled Rack onto the vehicle. Align the rear mount hole in the Foot Rail with the rear mark you made earlier in 4.1 and mark the remaining five hole centers.

Check Antenna clearance before drilling. Please contact help center if you are unsure.

Remove the Rack from the vehicle.

Drill a 5mm Pilot hole in the center of the markings. Open the holes using a 12mm drill bit.

Clean any excess debris around the holes. Do not apply exesive force let the drill do the work. There is an airbag curtain below. Use a blade to remove +/-2mm of the mastic around the hole to ensure jack nut will seat firmly on metal. Apply anti rust.

4.3

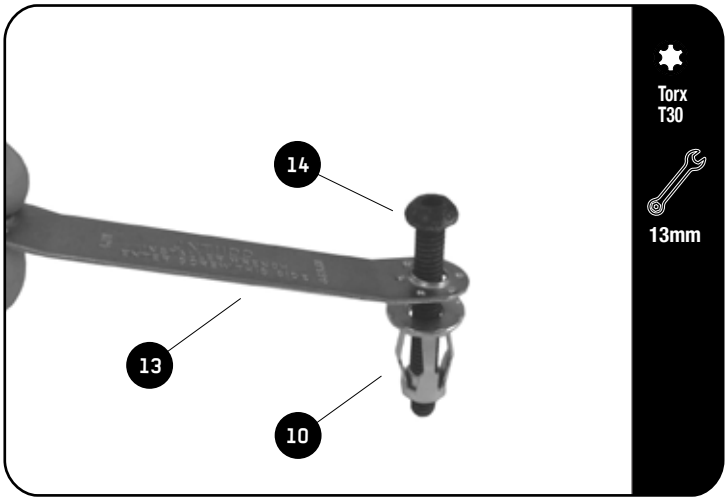

Insert an M6 button head bolt (Item 14) into the side of the installer wrench (Item 13). Loosely fit a jack nut (Item 10) to the button head bolt as shown.

Using the installer wrench and a M6x30 button head bolt, insert the M6 jack nuts into all 12 holes.

Using a cordless driver and a 4mm allen cordless bit, set the jack nut into the hole while holding onto the handle of the installer wrench.

© 2022 FRONT RUNNER VEHICLE OUTFITTERS

4 FIT AND SECURE

4.4

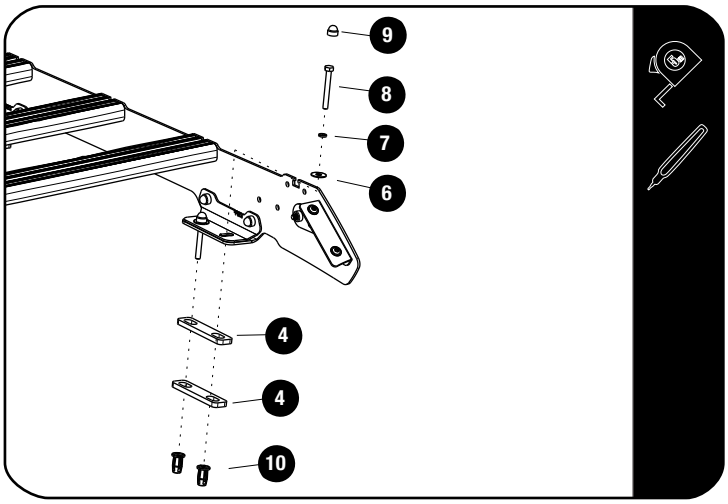

Place silicone over each of the jack nut openings.

Stack 2 Spacers (Item 4) over the jack nuts inserted in 2.8.

Position the rack over the cab placing it on spacers inserted earlier.

Place a bead of silicone along the threads of the M6x50 Hex Bolts and secure the rack using M6x50 Hex Bolts, M6 Spring Washers & M6x19x1 Flat Washers (Items 6, 7 & 8). Fully tighten.

Place M6 Nut Caps (Item 9) over all Hex Bolts.

5 COMPLETION

5.1

Congratulations! You did it. Take a step back and admire your work!

6 INSTALL OTHER VEHICLE AND RACK ACCESSORIES

Now's the time to visit your favorite Front Runner Dealer in person or online.

IMPORTANT!

FRONT RUNNER RACK KITS OFTEN HAVE A HIGHER LOAD RATING THAN THE VEHICLES THEY ARE MOUNTED TO. PLEASE REFER TO YOUR SPECIFIC VEHICLE MANUFACTURER FOR A RECOMMENDED ROOF RATING. FRONT RUNNER CANNOT BE RESPONSIBLE FOR IMPROPER LOADING BEYOND THE VEHICLE MANUFACTURER'S STATED LOAD CAPACITY.

Be sure to tag us. We love to see our gear in action! #FrontRunnerOutfitters #BornToRoam

Share your adventures on:

© 2022 FRONT RUNNER VEHICLE OUTFITTERS