START HERE!

READ ME FIRST

Don't be a hero and muscle through this installation without reading these fitting instructions first! Improper installation of this gear may void certain aspects of your warranty.

Before you begin, take a moment and open all your Front Runner rack kit boxes and gather the assembly instructions for the various components.

A complete kit will contain:

1. A Front Runner Mounting System specific to your vehicle
2. A Front Runner Rack Tray or Load Bar Slats

This document will guide you through the assembly of the mounting system and assist you in fitting the roof rack tray or load bars to your specific vehicle.

Please refer to the next page for a list of all the components, quantities and tools required.

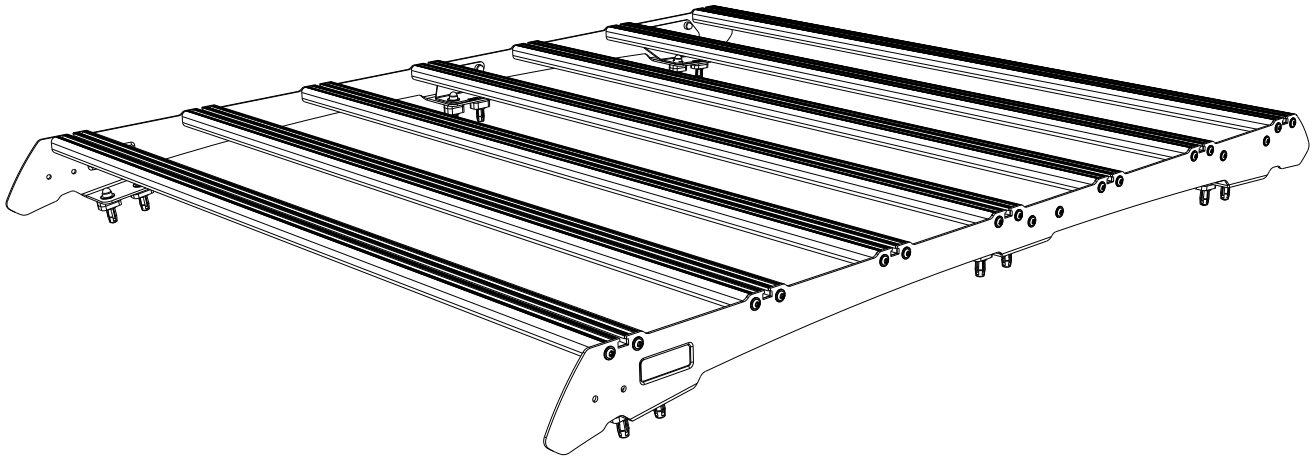

IMPORTANT WARNING! ⚠

IT IS CRITICAL THAT ALL FRONT RUNNER PRODUCTS BE PROPERLY AND SECURELY ASSEMBLED AND ATTACHED TO YOUR VEHICLE. IMPROPER ATTACHMENT COULD RESULT IN AN AUTOMOBILE ACCIDENT, AND COULD CAUSE SERIOUS BODILY INJURY OR DEATH. YOU ARE RESPONSIBLE FOR ASSEMBLING AND SECURING ALL FRONT RUNNER PRODUCTS TO YOUR VEHICLE, CHECKING THE ATTACHMENTS PRIOR TO USE, AND PERIODICALLY INSPECTING THE PRODUCTS FOR ADJUSTMENT, WEAR AND DAMAGE. THEREFORE, YOU MUST READ AND UNDERSTAND ALL OF THE INSTRUCTIONS AND PRECAUTIONS SUPPLIED WITH YOUR FRONT RUNNER PRODUCT PRIOR TO INSTALLATION OR USE. IF YOU DO NOT UNDERSTAND ALL OF THE INSTRUCTIONS AND CAUTIONS, OR IF YOU HAVE NO MECHANICAL EXPERIENCE AND ARE NOT THOROUGHLY FAMILIAR WITH THE INSTALLATION PROCEDURES, YOU SHOULD HAVE THE PRODUCT INSTALLED BY A PROFESSIONAL INSTALLER OR OTHER QUALIFIED PERSONNEL.

NOTE: Front Runner will not be responsible for any damage caused by the failure to install the product according to these instructions.

Please call us if you have any questions about the installation of this product.

 © 2023 FRONT RUNNER VEHICLE OUTFITTERS

1 GET ORGANIZED

IN THE BOX

1	2 X	Foot Rail 1LH + 1RH
2	2 X	Stiffener Bracket 1LH + 1RH
3	2 X	Stiffener Bracket 1LH + 1RH
4	7 X	Standard Slat (1175mm)
5	8 X	M6 x 16 Flange Button Head Bolt
6	8 X	M6 Nyloc Nut
7	20 X	M6 Nut Cap
8	28 X	M6 x 25 Thread Forming Screw
9	12 X	M6 x 19 x 1 Flat Washer
10	12 X	M6 x 40 Hex Head Bolt
11	20 X	Spacer 01 6mm
12	4 X	Spacer 02 10mm
13	12 X	M6 Jack Nut
14	1 X	Installation Wrench
15	1 X	M6 x 30 Button Head Bolt

TOOLS NEEDED

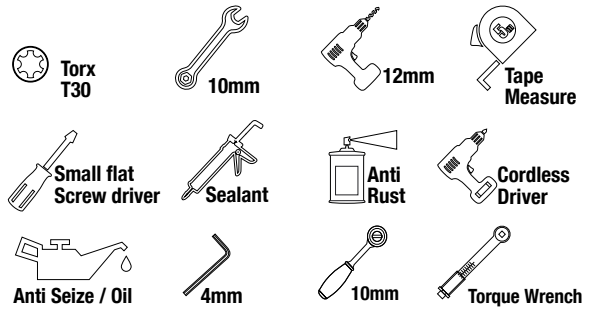

FIGURE 1.1

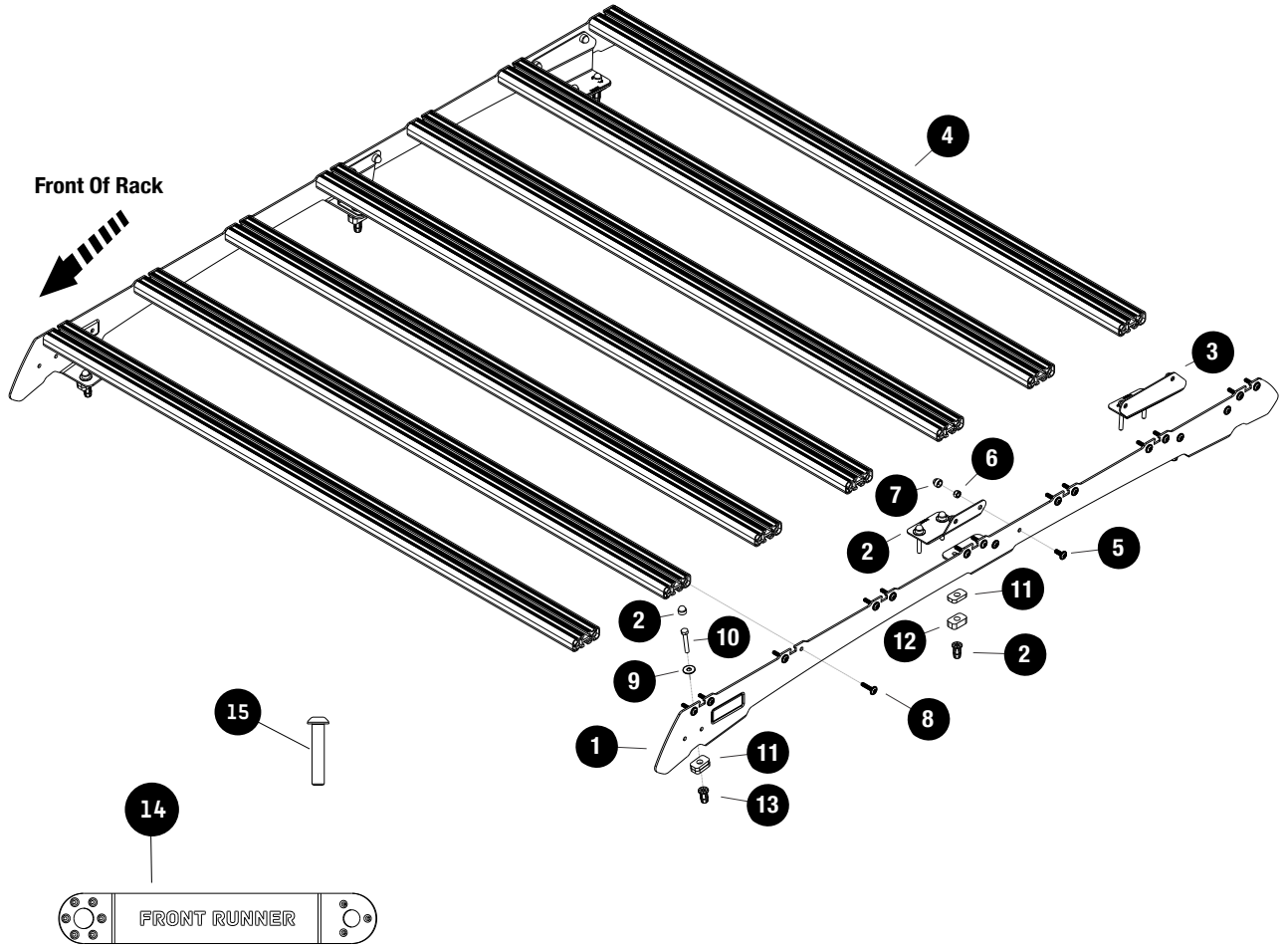

 © 2023 FRONT RUNNER VEHICLE OUTFITTERS

2 FIT AND SECURE

2.1

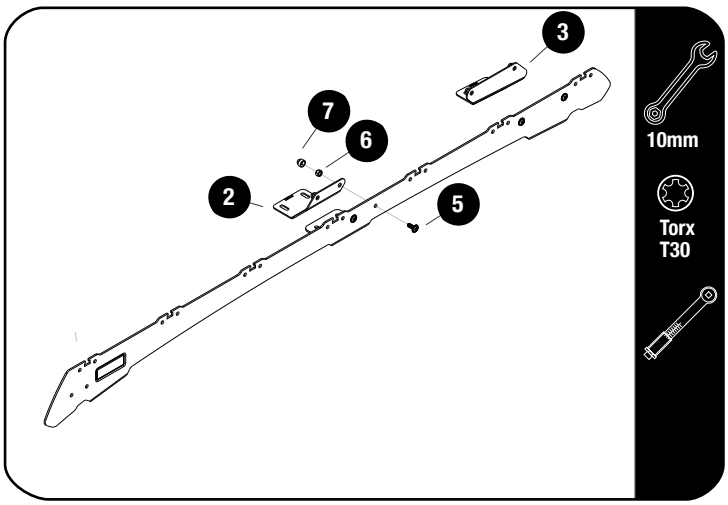

Secure the Stiffener Plates (Items 2 & 3) to the Foot Rails (Item 1), using M6x16 Flange Button Heads & M6 Nyloc Nuts (Items 5 & 6). Fully tighten.

Do this to both the LH & RH Foot Rails.

Place M6 Nut Caps (Item 7) over all Nyloc Nuts.

2.2

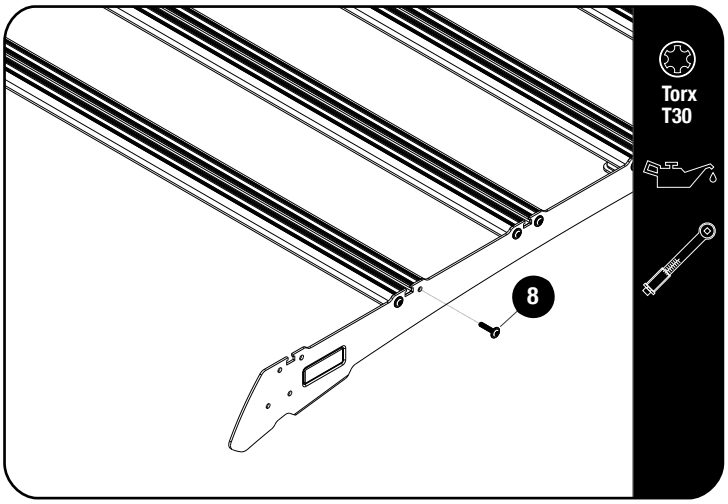

NOTE: Do not fit the front slat yet.

Use a little Oil / Anti-Seize on screw threads before inserting. Note these are Thread forming screws.

Assemble six Slats (Item 4) to the Foot Rails in 2.2 using M6x25 Thread Forming Screws (Item 8).

Tightening Torque 8-10Nm / 5.9 ft lb - 7.38 ft lb. Take care when using a cordless driver.

2.3

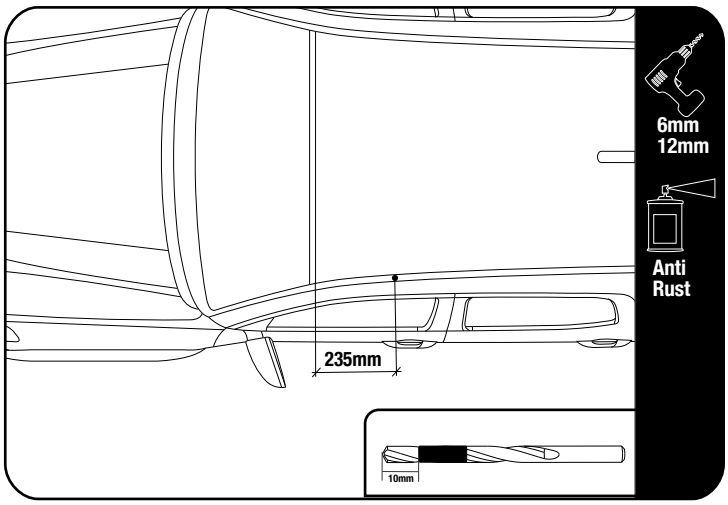

Starting at the top edge of the windscreen measure 235mm along the ditch towards the rear of the vehicle. Mark the hole centre in the ditch as shown.

Place the rack on the vehicles roof, lining up the front slot centre with the mark you made and mark the centre of the remaining 5 slots. Do this on both the LH & RH side.

TIP:
Use a drill stop or tape around the drill to mark a depth of 10mm. Some models may have an airbag curtain below.

Drill a 6mm Pilot hole in the center of the markings. Open the holes using a 12mm drill bit.

Apply anti rust to all holes.

© 2023 FRONT RUNNER VEHICLE OUTFITTERS

2 FIT AND SECURE

2.4

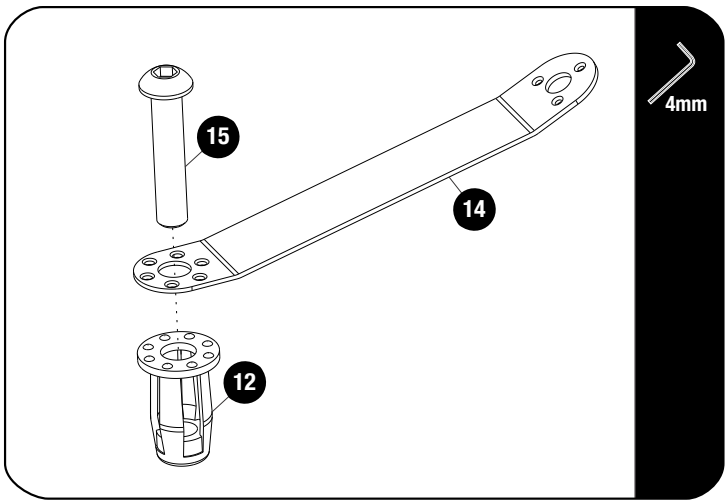

Insert a M6 x 30 Button Head Bolt (Item 15) into the Jack Nut Tool (Item 14) and loosely fit a Jack Nut (Item 12) to the button head bolt as shown.

Using a cordless driver and a 4mm allen cordless bit, set the jack nut into the hole while holding the Jack Nut Tool, to prevent the Jack Nut from turning.

Make sure the Jack Nut has pulled up all the way to the inside skin of the roof panel.

2.5

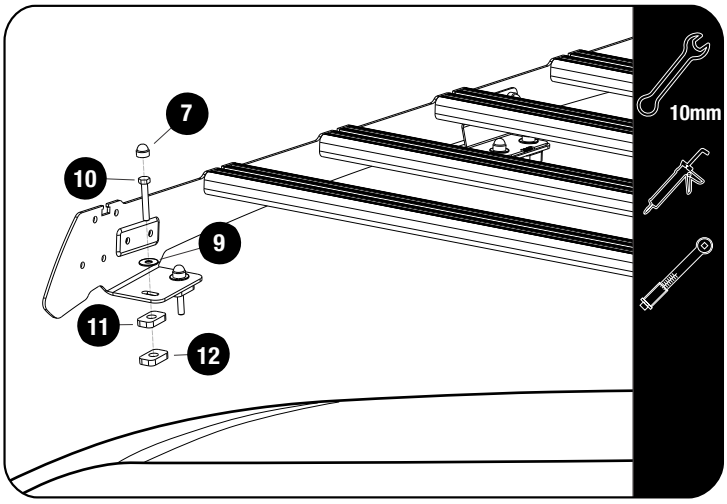

Place silicone over the 12 holes drilled in 2.3.

Center the spacers (Item 11 & 12) over the holes drilled in 2.2, followed by the rack assembly.

Front Foot	- 2 x 6mm Spacer per hole
Middle Foot	- 1 x 6mm Spacer per hole - 1 x 10mm Spacer per hole
Rear Foot	- 2 x 6mm Spacer per hole

Place a bead of silicone on the threads of the M6 x 40 Hex Bolts and secure the Slimsport roof rack using M6 x 40 Hex Bolts & M6 x 19 x 1 Flat Washers (Items 9 & 10). Fully tighten.

Place M6 Nut Caps (Item 7) over all Hex Bolts.

Refer to RRAC261 or RRAC262 for fitment of the first slat and wind fairing.

Tightening Torque:

M6 : 8-10Nm / 5.9 ft lb - 7.38 ft lb

5 INSTALL OTHER VEHICLE AND RACK ACCESSORIES

Now's the time to visit your favorite Front Runner dealer in person or online.

IMPORTANT!

FRONT RUNNER RACK KITS OFTEN HAVE A HIGHER LOAD RATING THAN THE VEHICLES THEY ARE MOUNTED TO. PLEASE REFER TO YOUR SPECIFIC VEHICLE MANUFACTURER FOR A RECOMMENDED ROOF RATING. FRONT RUNNER CANNOT BE RESPONSIBLE FOR IMPROPER LOADING BEYOND THE VEHICLE MANUFACTURER'S STATED LOAD CAPACITY.

Be sure to tag us. We love to see our gear in action! #FrontRunnerOutfitters #BornToRoam

Share your adventures on:

© 2023 FRONT RUNNER VEHICLE OUTFITTERS