START HERE!

READ ME FIRST

Don't be a hero and muscle through this installation without reading these fitting instructions first! Improper installation of this gear may void certain aspects of your warranty.

Before you begin, take a moment and open all your Front Runner rack kit boxes and gather the assembly instructions for the various components.

A complete kit will contain:

1. A Front Runner Mounting System specific to your vehicle
2. A Front Runner Rack Tray or Load Bar Slats

This document will guide you through the assembly of the mounting system and assist you in fitting the roof rack tray or load bars to your specific vehicle.

Please refer to the next page for a list of all the components, quantities and tools required.

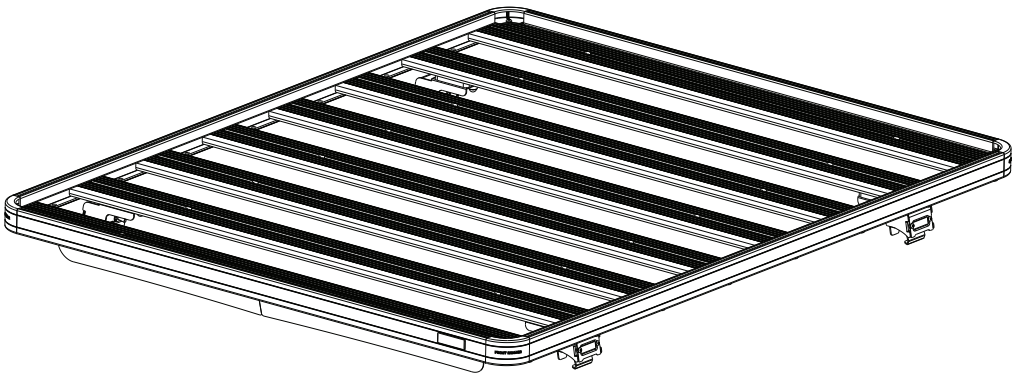

IMPORTANT WARNING! ⚠

IT IS CRITICAL THAT ALL FRONT RUNNER PRODUCTS BE PROPERLY AND SECURELY ASSEMBLED AND ATTACHED TO YOUR VEHICLE. IMPROPER ATTACHMENT COULD RESULT IN AN AUTOMOBILE ACCIDENT, AND COULD CAUSE SERIOUS BODILY INJURY OR DEATH. YOU ARE RESPONSIBLE FOR ASSEMBLING AND SECURING ALL FRONT RUNNER PRODUCTS TO YOUR VEHICLE, CHECKING THE ATTACHMENTS PRIOR TO USE, AND PERIODICALLY INSPECTING THE PRODUCTS FOR ADJUSTMENT, WEAR AND DAMAGE. THEREFORE, YOU MUST READ AND UNDERSTAND ALL OF THE INSTRUCTIONS AND PRECAUTIONS SUPPLIED WITH YOUR FRONT RUNNER PRODUCT PRIOR TO INSTALLATION OR USE. IF YOU DO NOT UNDERSTAND ALL OF THE INSTRUCTIONS AND CAUTIONS, OR IF YOU HAVE NO MECHANICAL EXPERIENCE AND ARE NOT THOROUGHLY FAMILIAR WITH THE INSTALLATION PROCEDURES, YOU SHOULD HAVE THE PRODUCT INSTALLED BY A PROFESSIONAL INSTALLER OR OTHER QUALIFIED PERSONNEL.

NOTE: Front Runner will not be responsible for any damage caused by the failure to install the product according to these instructions.

Please call us if you have any questions about the installation of this product.

 © 2021 FRONT RUNNER VEHICLE OUTFITTERS

1 GET ORGANIZED

IN THE BOX

1	1 X	Slimline II Tray - 1255mm(W) X 1560mm(L)
2	1 X	Spacer Set
3	2 X	Grab On Foot Set
4	2 X	Inner Grip Set
5	2 X	Outer Grip Set

TOOLS NEEDED

FIGURE 1.1

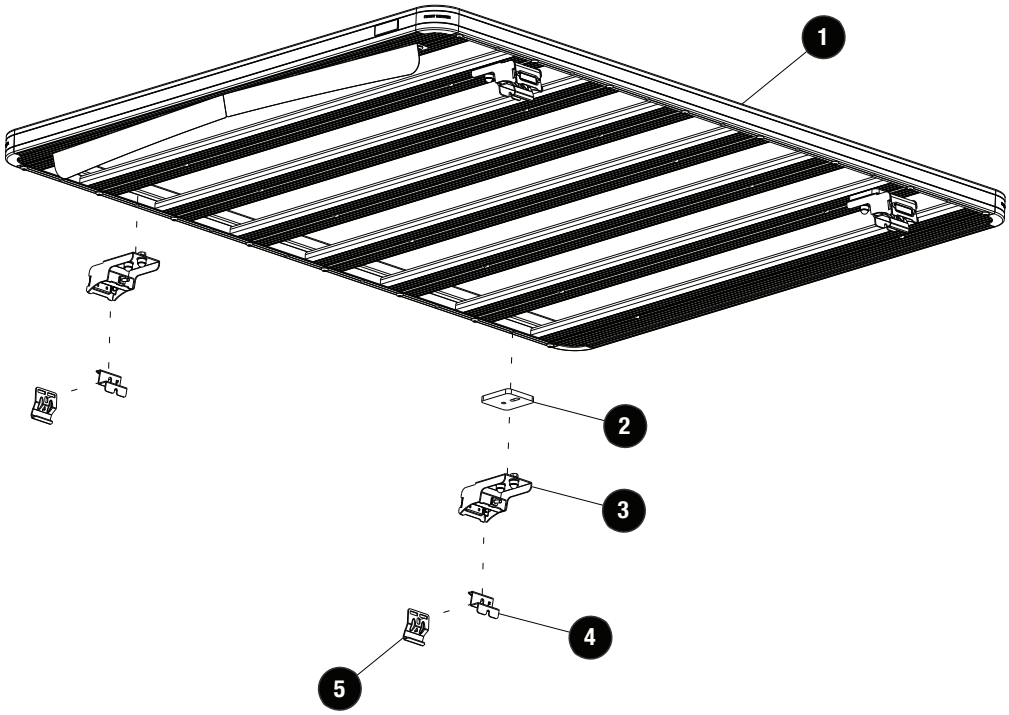

 © 2021 FRONT RUNNER VEHICLE OUTFITTERS

2 FIT AND SECURE

2.1

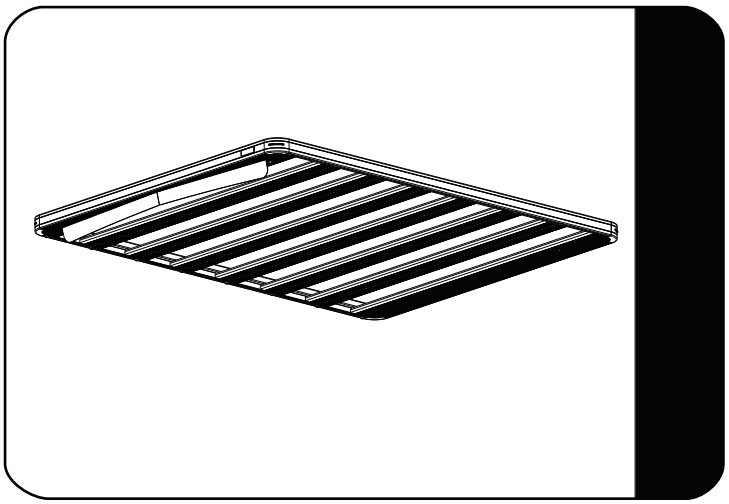

Assemble your Slimline II Tray, referring to the RRSTUNI fitment guide.

2.2

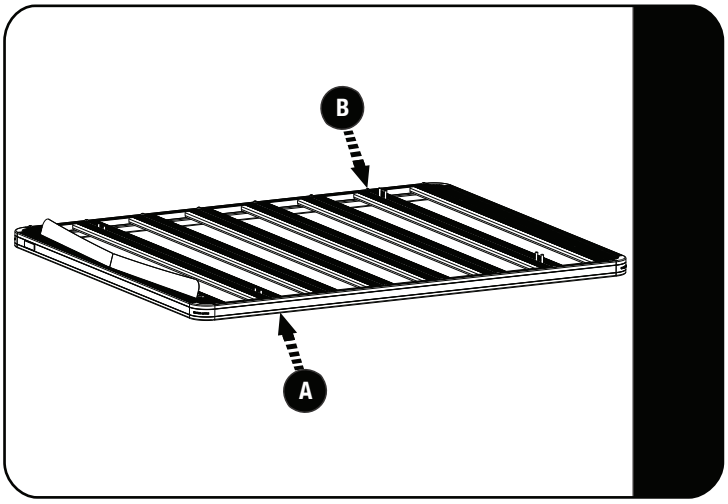

Flip the Tray so that the bottom of the Tray faces up.

A Insert four M8x16 Hex Bolts into the Slat machined slots as shown.

B Insert four M8x30 Hex Bolts into the Slat machined slots as shown.

2.3

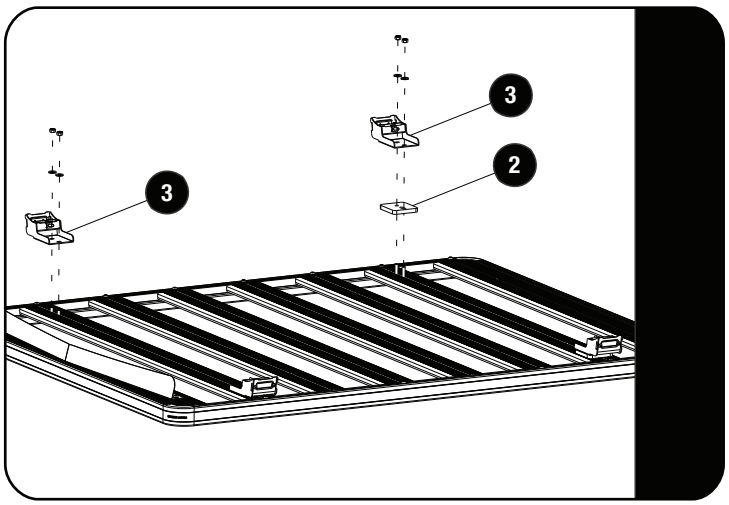

Loosely assemble the two Grab On Foot Sets (Item 3) onto the slats indicated in 2.2 as shown using M8 Flat Washers and M8 Nyloc Nuts.

Note the Spacers must be used on the rear feet.

© 2021 FRONT RUNNER VEHICLE OUTFITTERS

2 FIT AND SECURE

2.4

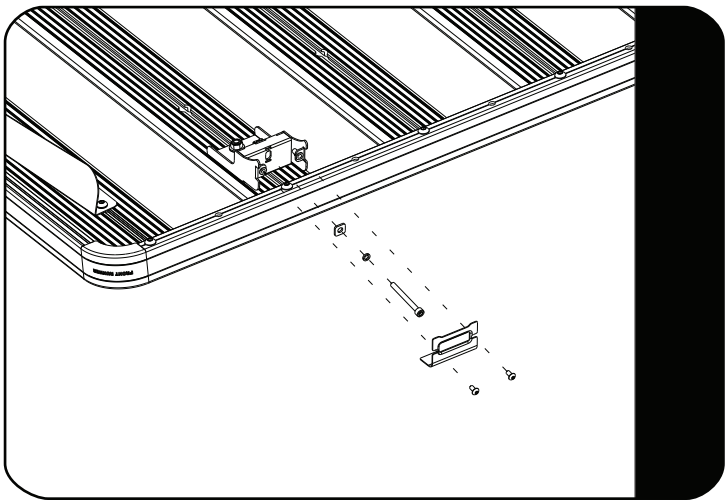

Refer to GOFR001 fitment guide.

Remove the Front Covers from all the Base Feet by loosening the two M5x10 Button Head Screws.

Loosen and remove the M5 Cap Screw, M5 Spring Washer and Cap Screw Washer.

2.5

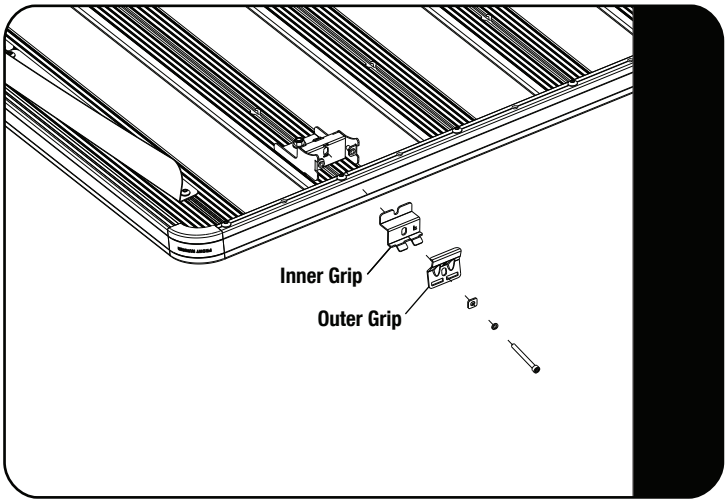

Loosley fit one Inner Grip and one Outer Grip to each Grab On Foot using a M5 Cap Screw, M5 Spring Washer and M5 Cap Screw Washer removed.

3 FIT AND SECURE

3.1

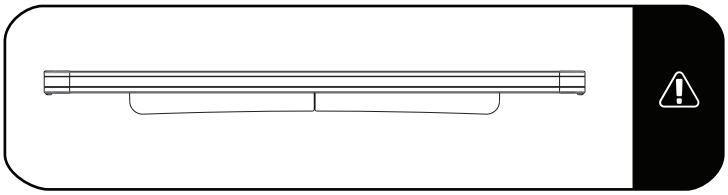

Make sure that the wind deflector is installed before you proceed to the next step.

 © 2021 FRONT RUNNER VEHICLE OUTFITTERS

3 FIT AND SECURE

3.2

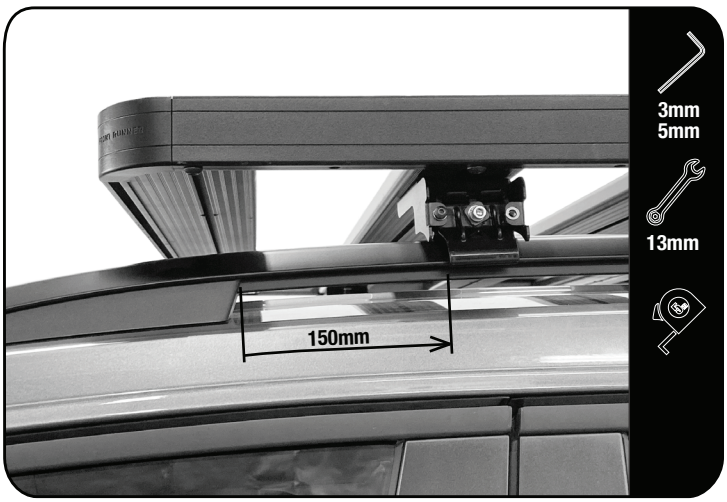

Place your Tray on the vehicle positioning all the feet so that they rest on top of the roof rails.

Measure 150mm on the front of the roof rail as shown and position the LH and RH front Grab On Feet.

Fully tighten all the M6x50 Cap Screws to secure the Tray onto the rails.

Tightening Torque 6Nm

Make sure there are no movement on the rack after fully tightening all the fasteners.

Refit the Front Cover Plates.

3.3

Center the rack and tighten fully. Finish off by placing M8 Nut Caps over the M8 Nyloc Nuts.

4 COMPLETION

4.1

Congratulations! You did it. Take a step back and admire your work!

5 INSTALL OTHER VEHICLE AND RACK ACCESSORIES

Now's the time to visit your favorite Front Runner Dealer in person or online.

IMPORTANT!

FRONT RUNNER RACK KITS OFTEN HAVE A HIGHER LOAD RATING THAN THE VEHICLES THEY ARE MOUNTED TO. PLEASE REFER TO YOUR SPECIFIC VEHICLE MANUFACTURER FOR A RECOMMENDED ROOF RATING. FRONT RUNNER CANNOT BE RESPONSIBLE FOR IMPROPER LOADING BEYOND THE VEHICLE MANUFACTURER'S STATED LOAD CAPACITY.

Be sure to tag us. We love to see our gear in action! #FrontRunnerOutfitters #BornToRoam

Share your adventures on:

© 2021 FRONT RUNNER VEHICLE OUTFITTERS