START HERE!

READ ME FIRST

Don't be a hero and muscle through this installation without reading these fitting instructions first! Improper installation of this gear may void certain aspects of your warranty.

Before you begin, take a moment and open all your Front Runner rack kit boxes and gather the assembly instructions for the various components.

A complete kit will contain:

1. A Front Runner Mounting System specific to your vehicle
2. A Front Runner Rack Tray or Load Bar Slats

This document will guide you through the assembly of the mounting system and assist you in fitting the roof rack tray or load bars to your specific vehicle.

Please refer to the next page for a list of all the components, quantities and tools required.

IMPORTANT WARNING! ⚠

IT IS CRITICAL THAT ALL FRONT RUNNER PRODUCTS BE PROPERLY AND SECURELY ASSEMBLED AND ATTACHED TO YOUR VEHICLE. IMPROPER ATTACHMENT COULD RESULT IN AN AUTOMOBILE ACCIDENT, AND COULD CAUSE SERIOUS BODILY INJURY OR DEATH. YOU ARE RESPONSIBLE FOR ASSEMBLING AND SECURING ALL FRONT RUNNER PRODUCTS TO YOUR VEHICLE, CHECKING THE ATTACHMENTS PRIOR TO USE, AND PERIODICALLY INSPECTING THE PRODUCTS FOR ADJUSTMENT, WEAR AND DAMAGE. THEREFORE, YOU MUST READ AND UNDERSTAND ALL OF THE INSTRUCTIONS AND PRECAUTIONS SUPPLIED WITH YOUR FRONT RUNNER PRODUCT PRIOR TO INSTALLATION OR USE. IF YOU DO NOT UNDERSTAND ALL OF THE INSTRUCTIONS AND CAUTIONS, OR IF YOU HAVE NO MECHANICAL EXPERIENCE AND ARE NOT THOROUGHLY FAMILIAR WITH THE INSTALLATION PROCEDURES, YOU SHOULD HAVE THE PRODUCT INSTALLED BY A PROFESSIONAL INSTALLER OR OTHER QUALIFIED PERSONNEL.

NOTE: Front Runner will not be responsible for any damage caused by the failure to install the product according to these instructions.

Please call us if you have any questions about the installation of this product.

 © 2023 FRONT RUNNER VEHICLE OUTFITTERS

1 GET ORGANIZED

IN THE BOX

1	1 X	Slimline II Tray 1475mm (W) x 945mm (L)
2	1 X	Wind Deflector 20mm Lip
3	2 X	10mm Spacer LASS040
4	1 X	6mm Spacer LASS027
5	3 X	Leg Set

TOOLS NEEDED

FIGURE 1.1

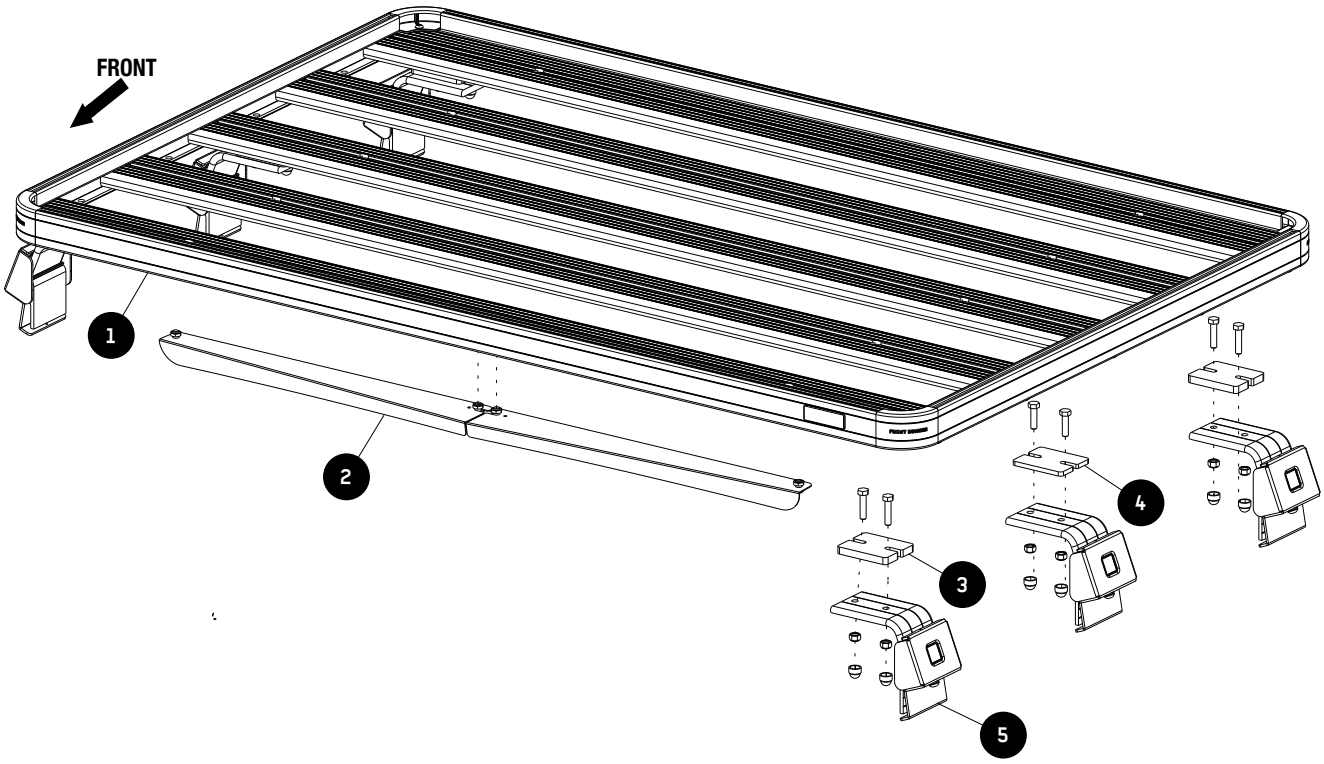

 © 2023 FRONT RUNNER VEHICLE OUTFITTERS

2 FIT AND SECURE

2.1

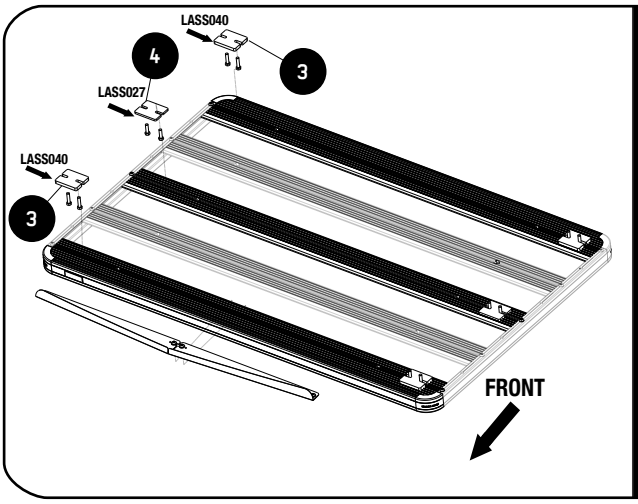

Refer o RRSTUNNI before continuing to 2.1.

Flip the Tray so that the bottom of the Tray faces up.

A **Insert 12 x M8x35 Hex Bolts into each of the the machined slots in the slats as shown.**

Place the spacers over the M8 x 35 Bolts as shown.

LASS040 - Front - (Item 3)
LASS027 - Mid - (Item 4)
LASS040 - Rear - (Item 3)

2.2

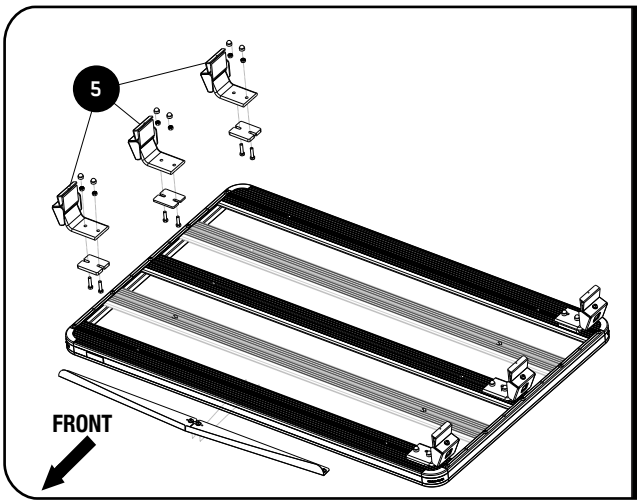

13mm

Loosely mount the 3 x legs (Item 5) to the slats indicated using M8 Flat Washers and M8 Nyloc Nuts included in the Leg sets.

2.3

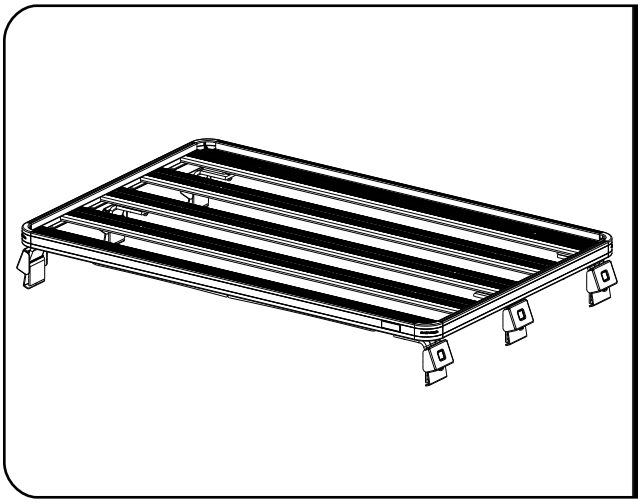

5mm

Refer to LASSUNI fitment guide.

© 2023 FRONT RUNNER VEHICLE OUTFITTERS

3 FIT AND SECURE

3.2

Place your Tray on the vehicle positioning all the Legs so that the leg clamps grip the gutters fully. Tighten all the bolts securing the legs to the rack before tightening the leg clamps.

Tightening Torque:

M8 : 15-20Nm / 11.06 ft lb - 14.75 ft lb

Make sure there are no movement on the rack after fully tightening all the fasteners.

3.3

Center the rack and tighten fully. Finish off by placing M8 Nut Caps over the M8 Nyloc Nuts.

4 INSTALL OTHER VEHICLE AND RACK ACCESSORIES

Now's the time to visit your favorite Front Runner Dealer in person or online.

IMPORTANT!

FRONT RUNNER RACK KITS OFTEN HAVE A HIGHER LOAD RATING THAN THE VEHICLES THEY ARE MOUNTED TO. PLEASE REFER TO YOUR SPECIFIC VEHICLE MANUFACTURER FOR A RECOMMENDED ROOF RATING. FRONT RUNNER CANNOT BE RESPONSIBLE FOR IMPROPER LOADING BEYOND THE VEHICLE MANUFACTURER'S STATED LOAD CAPACITY.

Be sure to tag us. We love to see our gear in action! #FrontRunnerOutfitters #BornToRoam

Share your adventures on:

© 2023 FRONT RUNNER VEHICLE OUTFITTERS