MERCEDES-BENZ GELÄNDEWAGEN 461/463

2.4m SLIMLINE RACK - HIGH

ENG

KRGWT05

INSTALL TIME: 45 mins

•HINT• ***You might want to watch an INSTALLATION VIDEO for a rack. The rack size may be different, but the concept is the same. You can go to YOUTUBE.COM, search for Front Runner Roof Rack, or you can download it from***

FRONTRUNNEROUTFITTERS.COM

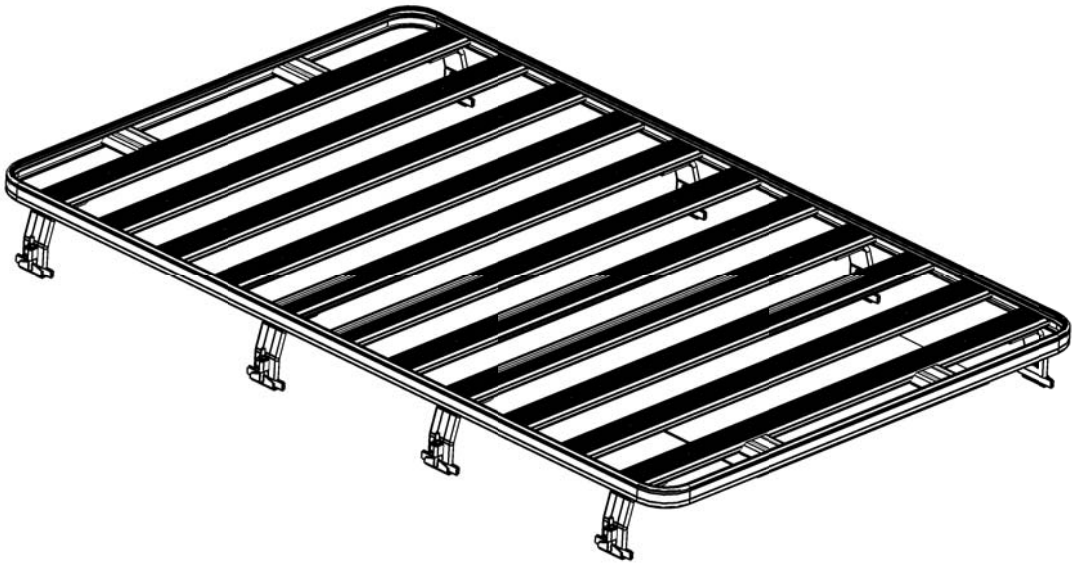

1 GET ORGANIZED

you will need:

- ☐ a Geländewagen 461/463
- ☐ 13 mm flat wrench and socket wrench
- ☐ 4 mm Allen wrench
- ☐ a tube of Loctite thread locker (optional)
- ☐ a friend for Step 4
- ☐ a clean dry area near your Geländewagen

...CONT'D

IMPORTANT WARNING!

IT IS CRITICAL THAT ALL FRONT RUNNER RACKS AND ACCESSORIES BE PROPERLY AND SECURELY ATTACHED TO YOUR VEHICLE. IMPROPER ATTACHMENT COULD RESULT IN AN AUTOMOBILE ACCIDENT, AND COULD CAUSE SERIOUS BODILY INJURY OR DEATH TO YOU OR TO OTHERS. YOU ARE RESPONSIBLE FOR SECURING THE RACKS AND ACCESSORIES TO YOUR CAR, CHECKING THE ATTACHMENTS PRIOR TO USE, AND PERIODICALLY INSPECTING THE PRODUCTS FOR ADJUSTMENT, WEAR, AND DAMAGE. THEREFORE, YOU MUST READ AND UNDERSTAND ALL OF THE INSTRUCTIONS AND CAUTIONS SUPPLIED WITH YOUR FRONT RUNNER PRODUCT PRIOR TO INSTALLATION OR USE. IF YOU DO NOT UNDERSTAND ALL OF THE INSTRUCTIONS AND CAUTIONS, OR IF YOU HAVE NO MECHANICAL EXPERIENCE AND ARE NOT THOROUGHLY FAMILIAR WITH THE INSTALLATION PROCEDURES, YOU SHOULD HAVE THE PRODUCT INSTALLED BY A PROFESSIONAL INSTALLER SUCH AS A QUALIFIED GARAGE OR AUTO BODY SHOP.

1 GET ORGANISED ...CONT'D

Here is what you are looking at:

Item #	Quantity	Description
1	1	M01 BASKET
2	1	WIND DEFLECTOR
3	8	LEG ASSEMBLY

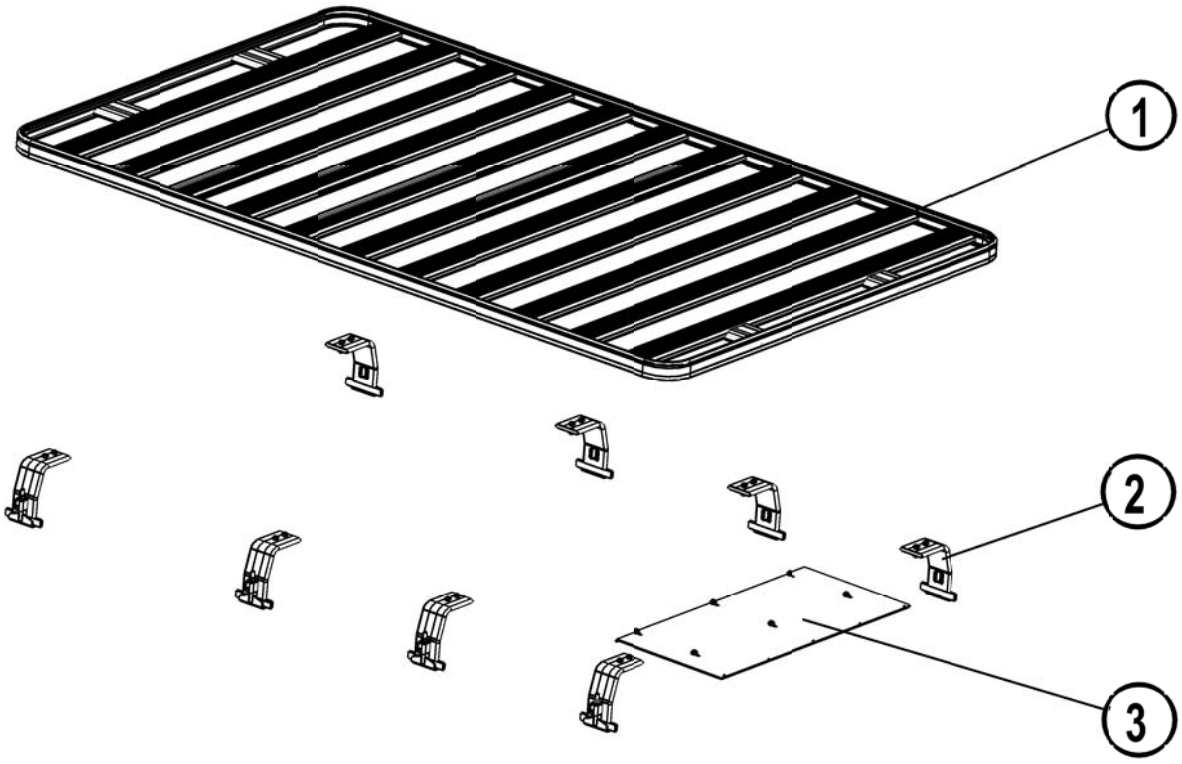

B)

Familiarize yourself with the parts and then step away from the work area and read through these instructions from beginning to end. Grab a cup of coffee and take a moment. A little prep now may save you a lot of time later

2 INSTALL WIND DEFLECTOR

Check the product sticker on the roof rack- if it is upside down, you are ready to install the legs, if it is not, turn the rack over so that it is upside down.

A)
Slide three bolts (Item 6) into the grooves in the first and second slats (Item 5).

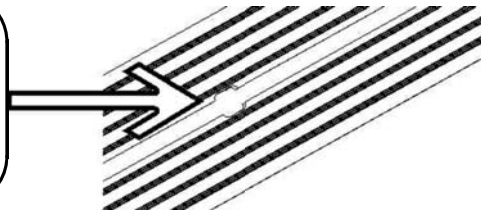

B)
Set the wind deflector (Item 4) over the bolts (Item 6) - the bend in the deflectors should be facing up- (when the roof rack is flipped over and mounted on the roof, the bend in the deflectors will face down towards the roof

Item #	Quantity	Description
1	6	NYLOC HEX NUT - M8
2	6	FLAT WASHER - M8
3	3	4mm POP RIVET
4	1	WIND DEFLECTOR
5	11	SLAT
6	6	HEX HEAD BOLT - M8x16

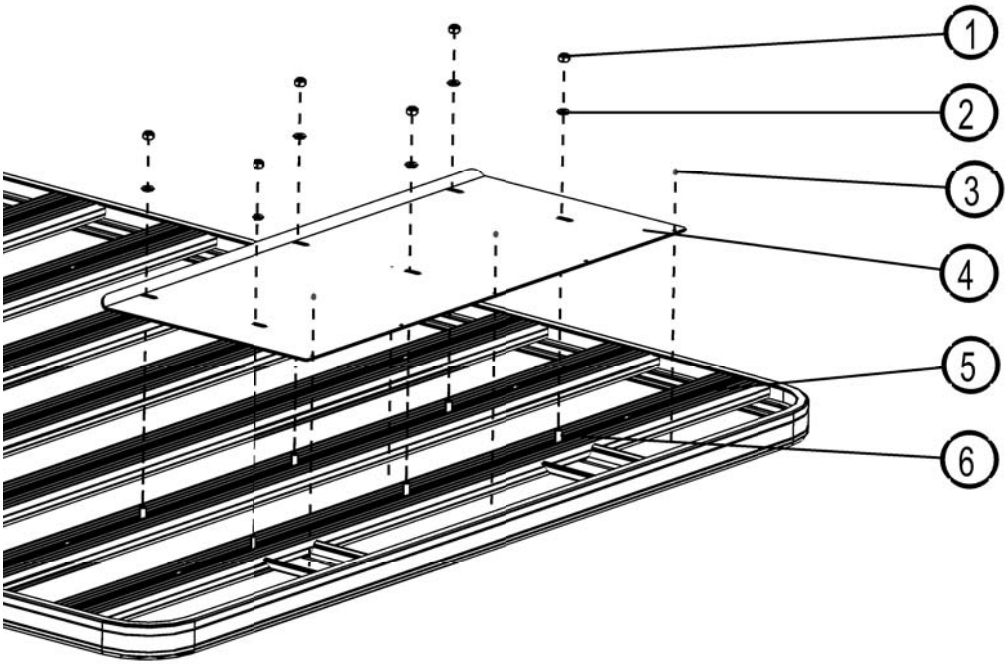

C)
Place the washers and nyloc nuts (Items 1&2) in position and hand tighten. Center the wind deflector (Item 4) and slide it snug up against the front rail and tighten with your 13 mm wrench.

D)
Using the 4.5 mm drill, spot through the 3 holes in the front of the wind deflector and drill through into the aluminum section.

Grab your rivet gun and rivet the deflector plate to the rack.

IMPORTANT! Once your Roof Rack is fitted, ensure a 15mm clearance is maintained between the Wind Deflector and the vehicles roof otherwise damage to the roof may occur. Bend the Wind Deflector by hand if necessary.

3 PREP THE LEGS

A)
The legs are shipped loosely assembled. Remove the M8 nuts and washers (items 2,7 & 8) holding the leg clamps (Item 4) on. Set aside the leg clamps, nuts, bolts and washers. You may need to loosen the set screw (Item 6) with a 4mm Allen wrench to remove the leg clamp. Place the Legs (Item 5) on slats 1, 4, 7 and 11. Slat 1 is on the wind deflector side.

B)
Remove the bolts, nyloc nuts and washers from the top pieces of the legs (Item 5) and slide two bolts each into slats 1, 4, 7 and 11 (the rack should still be upside down from the installation of the wind deflectors). Slide the bolts to the outer edges of the rack and place the legs on the bolts, then the washers and the nyloc nuts and hand tighten.

Item #	Quantity	Description
1	16	HEX HEAD BOLT - M8x25
2	24	FLAT WASHER - M8
3	16	NYLOC HEX NUT - M8
4	8	LEG CLAMP
5	8	LEG
6	8	SET SCREW, FLAT POINT - M8x16
7	8	SPRING WASHER - M8
8	8	HEX NUT - M8

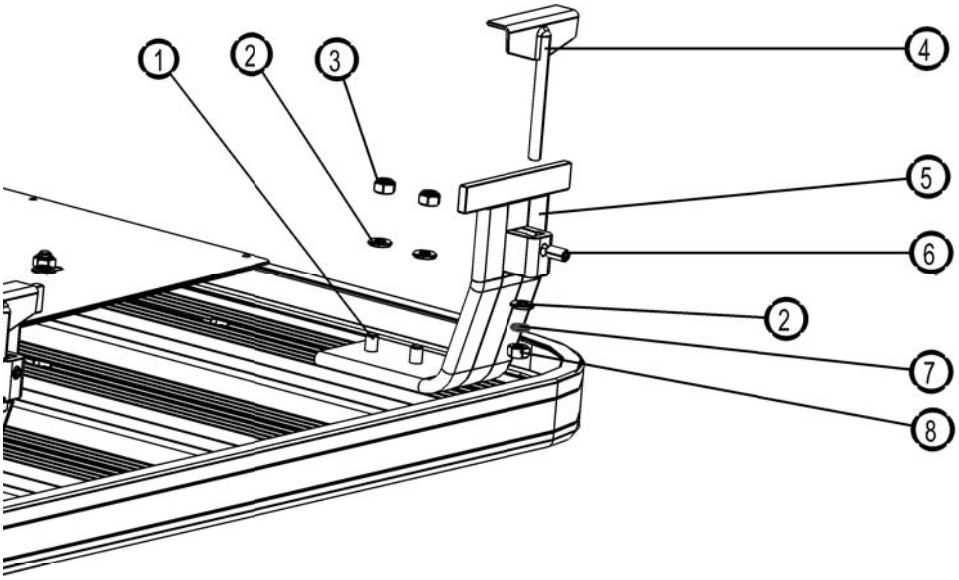

C)
Measure the distance between gutters on your roof. Place the legs at the same distance apart symmetric around the center of the rack. Hand tighten the nuts and washers (Items 2 and 3).

4 RACK INSTALL

A)
Grab your friend. Before you lift the rack, plan your angle of approach. You want to set the rack and legs directly into the roof gutter.

WARNING! DO NOT SLIDE THE RACK AND LEGS ACROSS THE ROOF!! If there is a chance you are going to set the roof rack on the roof, throw some moving blankets and/or towels up there. If you must lower the rack before it is in position, carefully set the legs on the padded surface.

B)
Lift the rack up over the vehicle and set it into the roof gutter. You may need to slide the legs a bit to line up with roof gutter as you're lowering the rack.

C)
Once the rack is in place, insert and hand tighten the leg clamp (Item 5), washers (Items 2 and 3) and nuts (Item 1)

Item #	Quantity	Description
1	8	HEX NUT - M8
2	8	SPRING WASHER - M8
3	8	FLAT WASHER - M8
4	8	SET SCREW, FLAT POINT - M8x16
5	8	LEG CLAMP

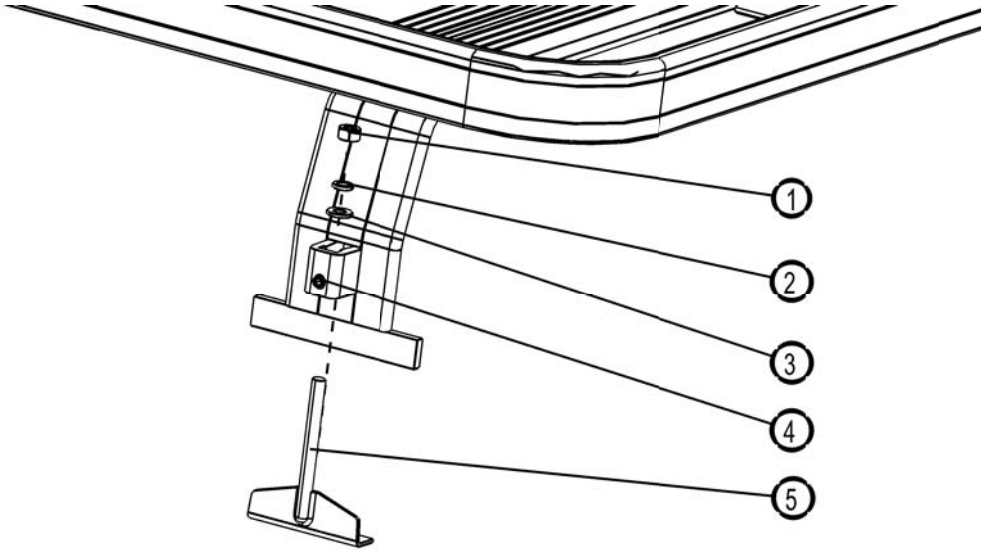

D)
Use your 13mm wrench and tighten the top bolts onto the rack first.

E)
Use your 13mm wrench to tighten the leg clamp nut (Item 1)

F)
Use your 4mm Allen wrench to tighten the set screw (Item 4) which secures the clamp in position

5 INSTALL YOUR RACK ACCESSORIES

See the specific install guides.

And if you forgot to buy accessories, now's the time to take a trip to your dealer or visit www.FRONTRUNNEROUTFITTERS.COM

6 TAKE A TRIP

A)
After your first adventure, check the tension on all the bolts and screws and re-tighten where needed. You'll find a small amount of settling has happened.

B)
Go on many more adventures. Periodically check the bolts- it's always wise to double check your fasteners once in a while.

THE FINE PRINT- Now that your Front Runner Slimline Roof Rack is installed, please be safe with what you actually decide to bolt to your rack. Our rack is strong, much stronger than the roof of your vehicle.

If you have heavier, taller accessories you'd like to store, like a bunch of Jerry cans, a lot of water, etc. you might want to use our interior storage accessories. As with any vehicle carrying additional loads, it is safer to keep the center of gravity as low as possible, and this means keeping the heaviest items low and central.

And always remember- you've raised the height of your vehicle- so use caution when entering parking structures and driving under low hanging obstacles.

For the safety of your rack system and your vehicle, please obey all traffic laws and adjust speed accordingly to the load being carried and the conditions of the road. Cargo will effect the vehicles handling.

You'll get many years of enjoyment out of your Front Runner roof rack if you use common load carrying sense.

➜ **Modifying your vehicle involves some risks and may void certain aspects of your vehicle's warranty.**

© 2011 Front Runner Outfitters, Inc.