START HERE!

READ ME FIRST

Don't be a hero and muscle through this installation without reading these fitting instructions first! Improper installation of this gear may void certain aspects of your warranty.

Before you begin, take a moment and open all your Front Runner rack kit boxes and gather the assembly instructions for the various components.

A complete kit will contain:

1. A Front Runner Mounting System specific to your vehicle
2. A Front Runner Rack Tray or Load Bar Slats

This document will guide you through the assembly of the mounting system and assist you in fitting the roof rack tray or load bars to your specific vehicle.

Please refer to the next page for a list of all the components, quantities and tools required.

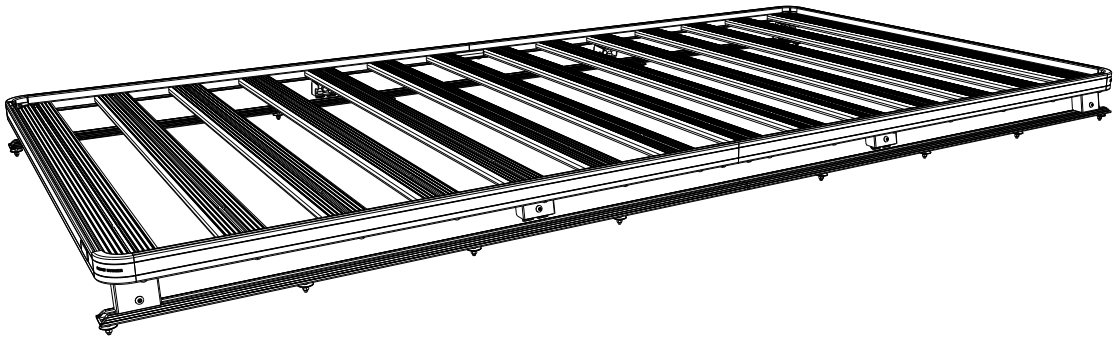

IMPORTANT WARNING! ⚠

IT IS CRITICAL THAT ALL FRONT RUNNER PRODUCTS BE PROPERLY AND SECURELY ASSEMBLED AND ATTACHED TO YOUR VEHICLE. IMPROPER ATTACHMENT COULD RESULT IN AN AUTOMOBILE ACCIDENT, AND COULD CAUSE SERIOUS BODILY INJURY OR DEATH. YOU ARE RESPONSIBLE FOR ASSEMBLING AND SECURING ALL FRONT RUNNER PRODUCTS TO YOUR VEHICLE, CHECKING THE ATTACHMENTS PRIOR TO USE, AND PERIODICALLY INSPECTING THE PRODUCTS FOR ADJUSTMENT, WEAR AND DAMAGE. THEREFORE, YOU MUST READ AND UNDERSTAND ALL OF THE INSTRUCTIONS AND PRECAUTIONS SUPPLIED WITH YOUR FRONT RUNNER PRODUCT PRIOR TO INSTALLATION OR USE. IF YOU DO NOT UNDERSTAND ALL OF THE INSTRUCTIONS AND CAUTIONS, OR IF YOU HAVE NO MECHANICAL EXPERIENCE AND ARE NOT THOROUGHLY FAMILIAR WITH THE INSTALLATION PROCEDURES, YOU SHOULD HAVE THE PRODUCT INSTALLED BY A PROFESSIONAL INSTALLER OR OTHER QUALIFIED PERSONNEL.

NOTE: Front Runner will not be responsible for any damage caused by the failure to install the product according to these instructions.

Please call us if you have any questions about the installation of this product.

 © 2021 FRONT RUNNER VEHICLE OUTFITTERS

1 GET ORGANIZED

IN THE BOX		
1	1 X	Slimline II Tray - 1425mm(W) x 2772mm(L)
2	2 X	Foot Set / 40mm-50mm
3	2 X	Foot Set / 60mm-70mm
4	2 X	Universal Track Non-Drilled / 1800mm(L)
5	1 X	Wind Deflector 45mm Lip Narrow Pair / 1255mm(W)
6	1 X	Bolt Kit - Ford Excurion (2000-2005)

TOOLS NEEDED

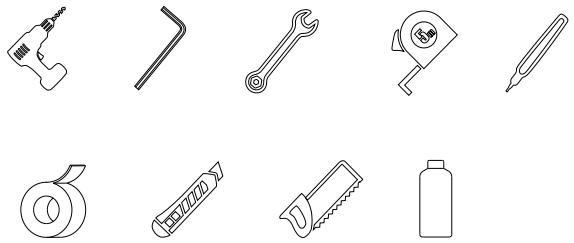

FIGURE 1.1

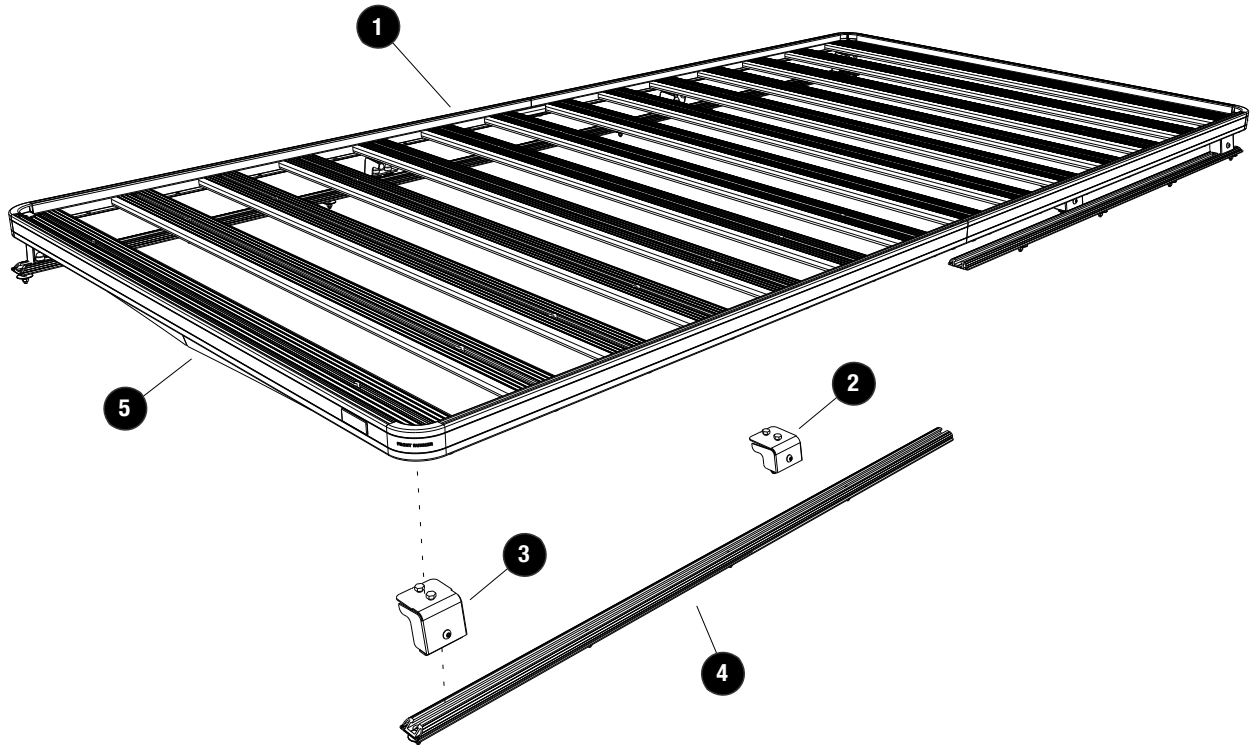

 © 2021 FRONT RUNNER VEHICLE OUTFITTERS

2 FIT AND SECURE

2.1

If fitted, remove factory rack and clean the roof. Clean the factory riv nuts with alcohol or similar to prep for silicon.

2.2

Place one of the Universal Tracks (Item 4) on the roof, aligning the pre-existing hole with the rearmost factory riv nut. Also align a tape measure with the end of the track and run it forward on the roof at least 53" (1346mm).

2.3

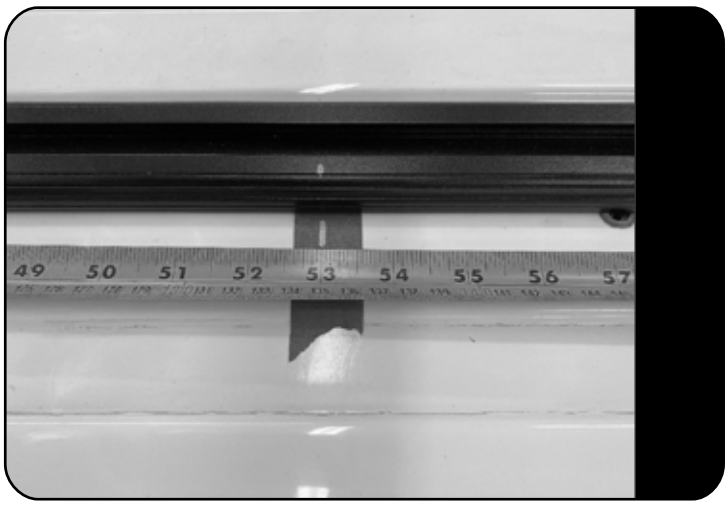

Place a piece of masking tape on the roof at 53" (1346mm) and mark. This will be the point at which the two sections of track will meet.

Mark the rear track at 53" (1346mm).

Ensure that the first hole of the rear track is aligned with the rear most factory riv nut before marking the locations of the other riv nuts up to the cut line you just made.

Do this on both sides.

 © 2021 FRONT RUNNER VEHICLE OUTFITTERS

2 FIT AND SECURE

2.4

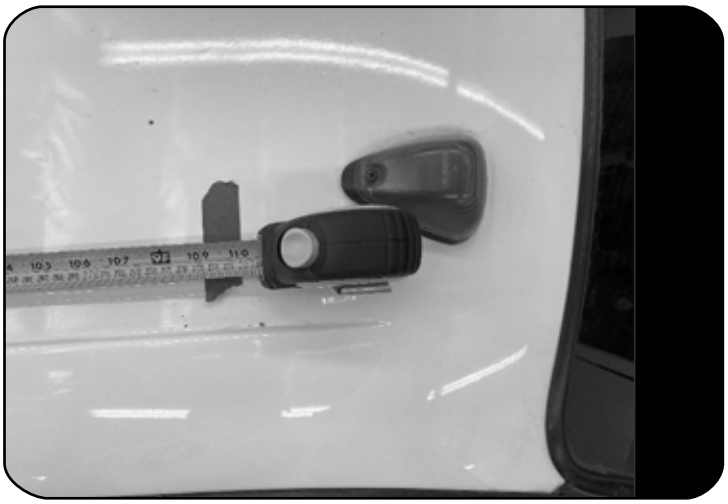

Also place a piece of masking tape at 109" (2772mm). This is where the front track will end on the roof.

2.5

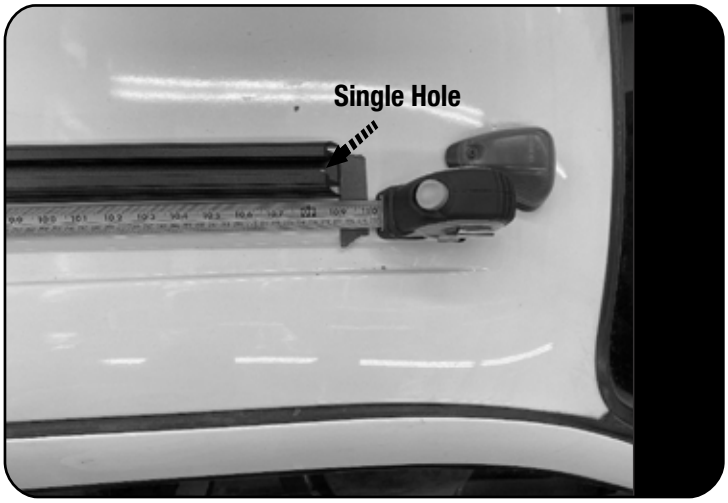

With the front track's single hole oriented forward, place the end of the track at you 109" (2772mm) mark.

Measure back to your 53" (1346mm) joining mark. The distance should be 56" (1442mm).

Mark your front track at 56" (1442mm) for cutting.

Do this on both sides.

If these measurements do not line up on your Ford Excursion, please contact us for verification before cutting and drilling.

2.6

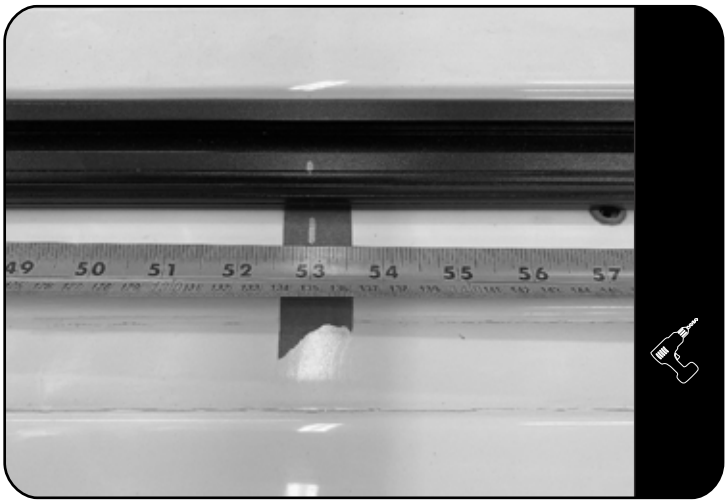

Remove the rear track from the roof and cut at the mark made.

Drill a 4mm pilot hole on each mark made in 2.3. The holes must be in the center of the track.

Open the holes to 6.5mm. Countersink all the holes so that the M6 x 30 Countersunk screw sit flush in the bottom of the track.

With both rear tracks cut and drilled, loosely fit them to the roof using the fasteners supplied with the tracks.

 © 2021 FRONT RUNNER VEHICLE OUTFITTERS

2 FIT AND SECURE

2.7

Place your front track flush against the rear track and mark the factory riv nut locations.

2.8

With the front track still in position, place the tape measure at the existing front hole in the track. Measure backward and mark the track at 8" (203mm) and 16" (406mm).

Remove the front track from the roof and cut at the mark made 2.5.

Drill a 4mm pilot hole on each mark made in 2.7. The holes must be in the center of the track.

Open the holes to 6.5mm. Countersink all the holes so that the M6 x 30 Countersunk screw sit flush in the bottom of the track.

With both rear tracks cut and drilled, loosely fit them to the roof using the fasteners supplied with the tracks.

Do this on both sides.

2.9

Place the front track back on the roof and take note of the roof curvature underneath the track. Where the roof starts to drop off, you need to gently bend the track on a workbench or in a padded vice and form it to the curve of the roof. This reduces excess upward strain on the Jack Nuts you will install in 2.10.

More frequent gentle bends will look much better that a couple of large bends.

With the track formed to the roof and drilled out, secure it to the available front and rear factory riv nuts.

Mark the roof through the three forward most holes by drill 4mm pilot holes.

Do not drill more than 10mm deep to avoid damage to the headliner.

© 2021 FRONT RUNNER VEHICLE OUTFITTERS

2 FIT AND SECURE

2.10

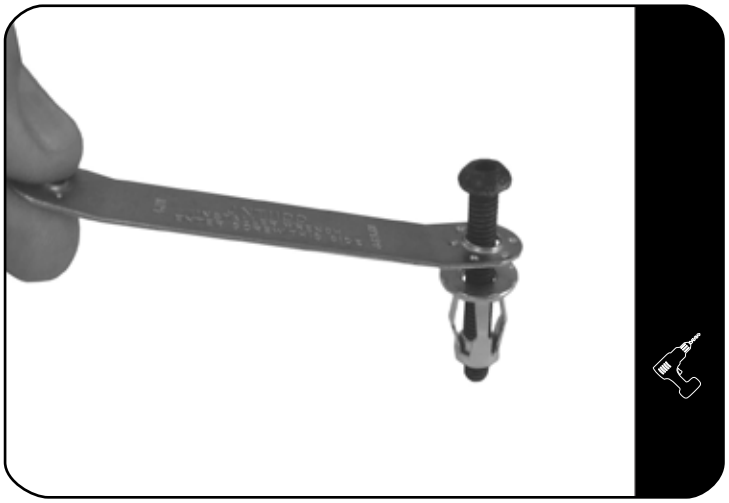

Remove the front track and open the 6 pilot holes to 11mm to fit the Jack Nuts.

Insert the M6 Button Head Bolt into the one side of the Installer Wrench.
Loosely fit a Jack Nut to the Button Head Bolt as shown.

Using the Installer Wrench and a M6 x 30 Button Head Bolt, insert the M6 Jack Nuts into all holes drilled.

Place the assembly into a hole and sing a Battery Powered Screw Driver and a 4mm Allen Key Bit, set the Jack Nut into the hole while holding onto the handle of the Installer Wrench.

Make sure that the Jack Nut has pulled up all the way to the inside skin of the roof panel.

2.11

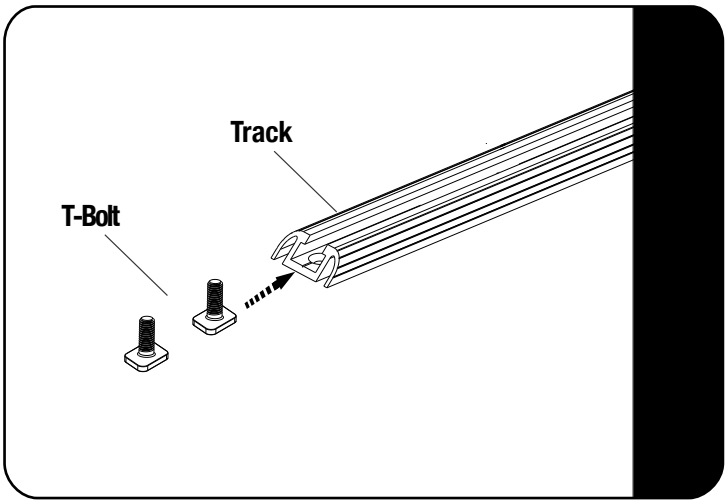

Cut the track rubber to length for all four tracks. Be sure to cut the rubber out over all the holes in the track, leaving room for the collat on the factory riv nuts to sit flush against the bottom of the track extrusion.

Place silicone in and around all the holes, before securing the tracks to the roof using M6 x 30 Countersunk Screws.

Slide M8 x 20 T-Bolts into the tracks, 8 per side.

 © 2021 FRONT RUNNER VEHICLE OUTFITTERS

3 FIT AND SECURE

3.1

Refer to RRSTUNI when assembling your Slimline II Tray.

3.2

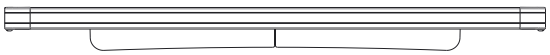

Make sure that the narrow wind deflector is installed before you proceed to the next step.

3.3

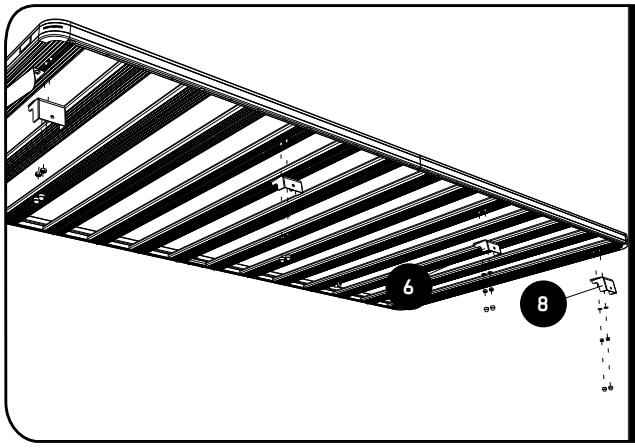

13mm

Loosely fit the Feet to the Roof Rack where shown (60-70mm feet (Item 3) in front and rear and 40-50mm feet (Item 2) in certer) using M8 x 20 Hex Bolts, M8 x 16 x 1.6SS Flat Washers and M8 Nyloc Nuts as shown.

With the help of a friend, lift the rack onto the vehicle and align the feet with the T-Bolts inserted in 2.11. Center the rack back to front.

Secure using M8 x 16 x 1.6 Flat Washers and M8 Nyloc Nuts.

Lift the rear four feet as high as possible before fully tightening.

3.4

Center the rack left to right and tighten fully. Use M8 Nut Caps to finish off the nuts.

 © 2021 FRONT RUNNER VEHICLE OUTFITTERS

4 COMPLETION

4.1 Congratulations! You did it. Take a step back and admire your work!

5 INSTALL OTHER VEHICLE AND RACK ACCESSORIES

Now's the time to visit your favorite Front Runner Dealer in person or online.

IMPORTANT!

FRONT RUNNER RACK KITS OFTEN HAVE A HIGHER LOAD RATING THAN THE VEHICLES THEY ARE MOUNTED TO. PLEASE REFER TO YOUR SPECIFIC VEHICLE MANUFACTURER FOR A RECOMMENDED ROOF RATING. FRONT RUNNER CANNOT BE RESPONSIBLE FOR IMPROPER LOADING BEYOND THE VEHICLE MANUFACTURER'S STATED LOAD CAPACITY.

Be sure to tag us. We love to see our gear in action! #FrontRunnerOutfitters #BornToRoam

Share your adventures on:

© 2021 FRONT RUNNER VEHICLE OUTFITTERS