FRONT RUNNER WOLFPACK PRO MOUNTING BRACKETS

ENG

RRAC257

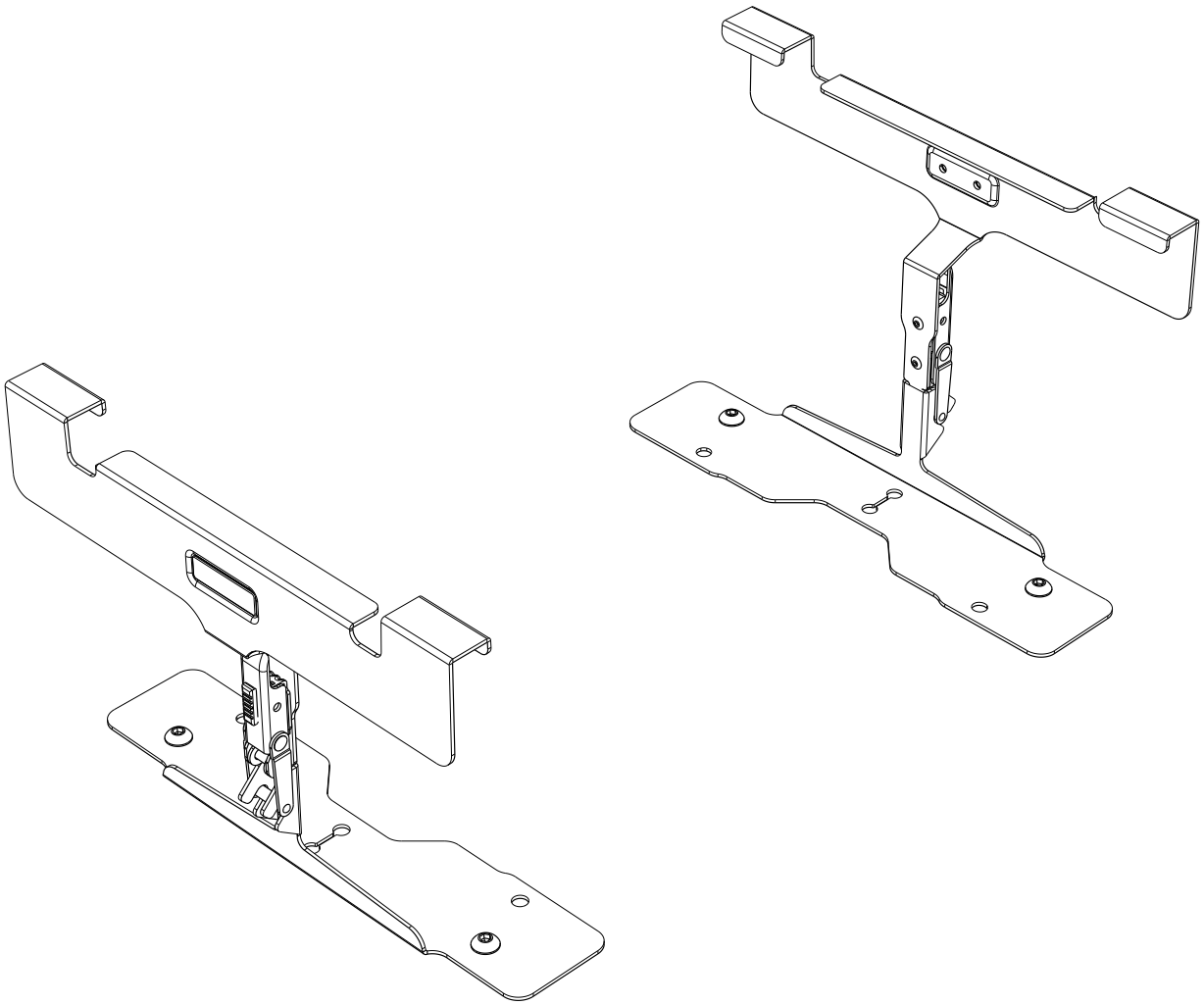

READ ME !

Thank you for purchasing a Front Runner Wolfpack Pro Mounting Bracket.

Before you start, take a moment to familiarize yourself with the Fitting Instructions and the included components.

Refer to Page 2 for a list of all the components, quantities and tools required.

IMPORTANT WARNING!

IT IS CRITICAL THAT ALL FRONT RUNNER PRODUCTS BE PROPERLY AND SECURELY ASSEMBLED AND ATTACHED TO YOUR VEHICLE. IMPROPER ATTACHMENT COULD RESULT IN AN AUTOMOBILE ACCIDENT, AND COULD CAUSE SERIOUS BODILY INJURY OR DEATH. YOU ARE RESPONSIBLE FOR ASSEMBLING AND SECURING ALL FRONT RUNNER PRODUCTS TO YOUR VEHICLE, CHECKING THE ATTACHMENTS PRIOR TO USE, AND PERIODICALLY INSPECTING THE PRODUCTS FOR ADJUSTMENT, WEAR AND DAMAGE. THEREFORE, YOU MUST READ AND UNDERSTAND ALL OF THE INSTRUCTIONS AND PRECAUTIONS SUPPLIED WITH YOUR FRONT RUNNER PRODUCT PRIOR TO INSTALLATION OR USE. IF YOU DO NOT UNDERSTAND ALL OF THE INSTRUCTIONS AND CAUTIONS, OR IF YOU HAVE NO MECHANICAL EXPERIENCE AND ARE NOT THOROUGHLY FAMILIAR WITH THE INSTALLATION PROCEDURES, YOU SHOULD HAVE THE PRODUCT INSTALLED BY A PROFESSIONAL INSTALLER OR OTHER QUALIFIED PERSONNEL.

NOTE: Front Runner will not be responsible for any damage caused by the failure to install the product according to these instructions.

Please call us if you have any questions about the installation of this product.

 © 2022 FRONT RUNNER VEHICLE OUTFITTERS

1 GET ORGANIZED

IN THE BOX

1	2 X	Bottom Bracket
2	2 X	Clamp Bracket
3	4 X	M8 x 10 Button Head Bolt
4	4 X	M8 Thin Nut

TOOLS NEEDED

5mm

A

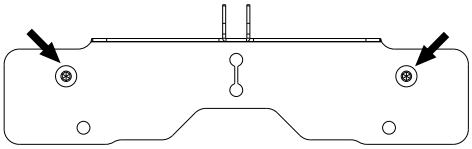

Lengthways

B

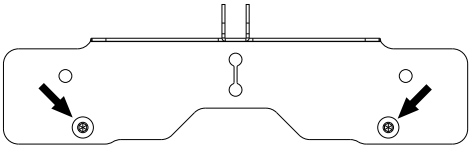

Widthways

Note : This Bracket works with both SBOX031 (Low Lid) and SBOX062 (High Lid).

FIGURE 1.1

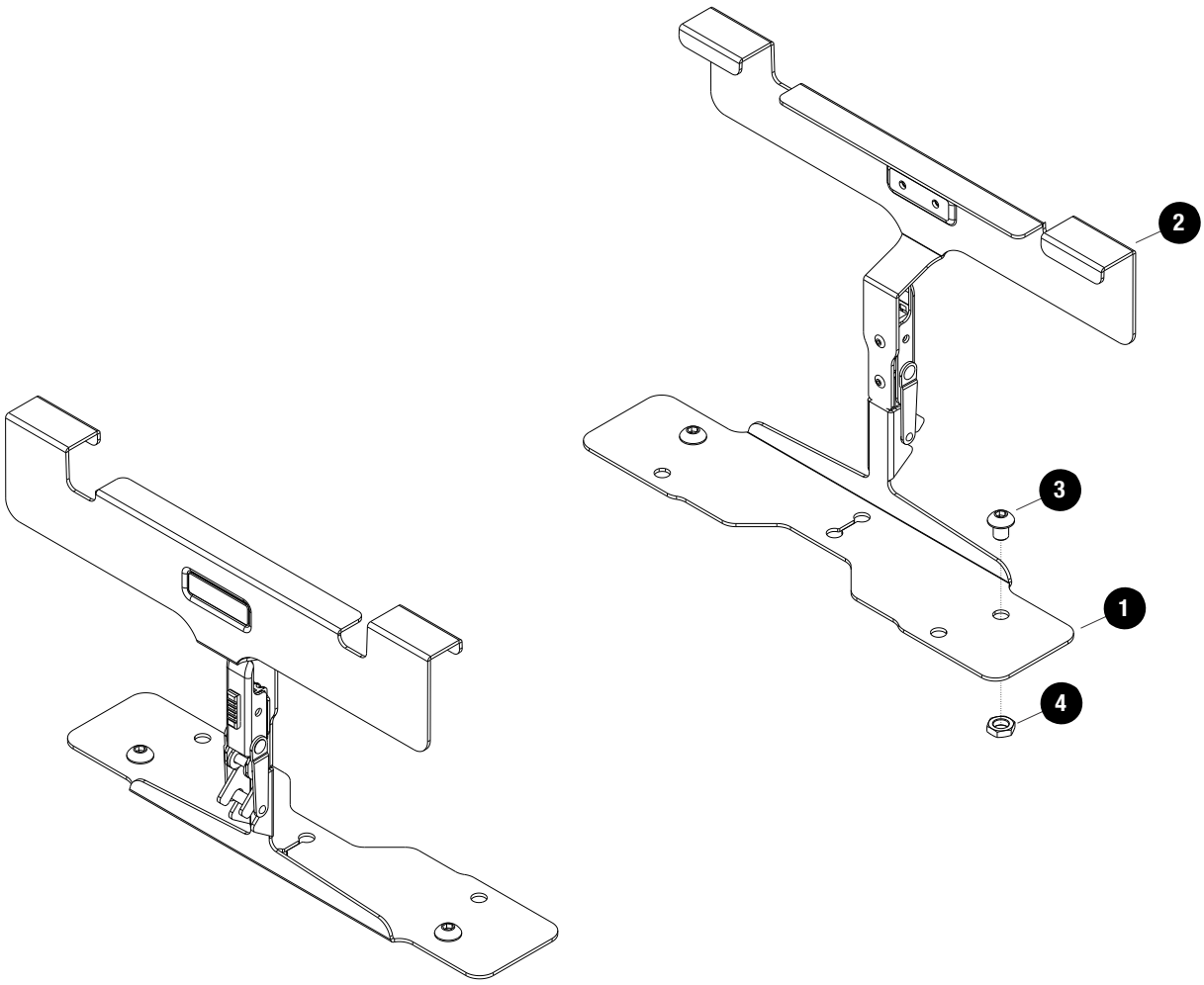

 © 2022 FRONT RUNNER VEHICLE OUTFITTERS

2 FIT AND SECURE

2.1

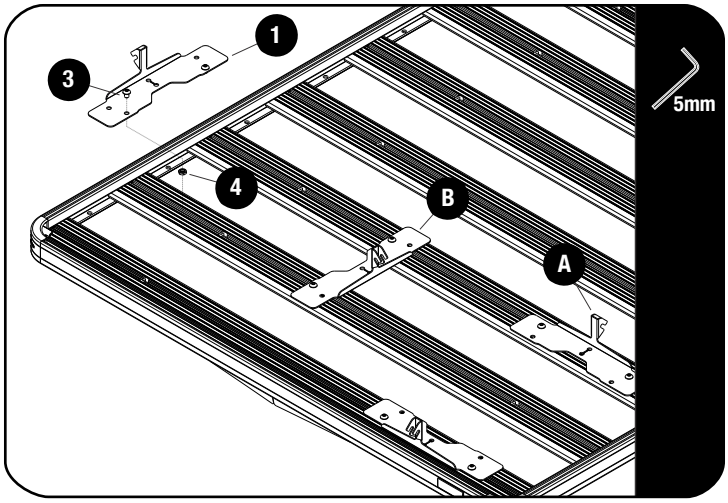

Decide where on the rack you want to fit your Wolf Pack Pro. (Sold Separately SBOX31). Refer to FIG1.1

A- Lengthways

B- Widthways

Slide M8 thin nuts (Item 4) in the choosen slats. Loosely fit the Bottom Brackets as shown using, M8x10 Button Head Bolts & M8 Thin Nuts (Items 3 & 4).

2.2

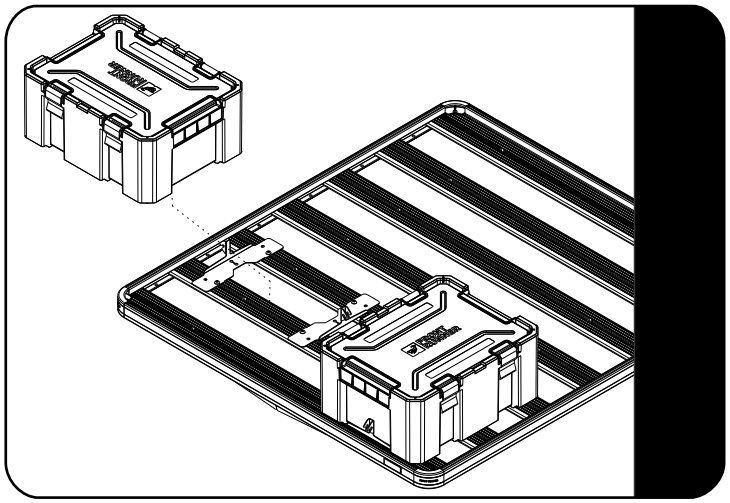

Place your Wolf Pack Pro onto the rack between the Wolf Pack Pro catch brackets.Move the brackets sugly against the Wolf Pack Pro before fully tightening.

2.3

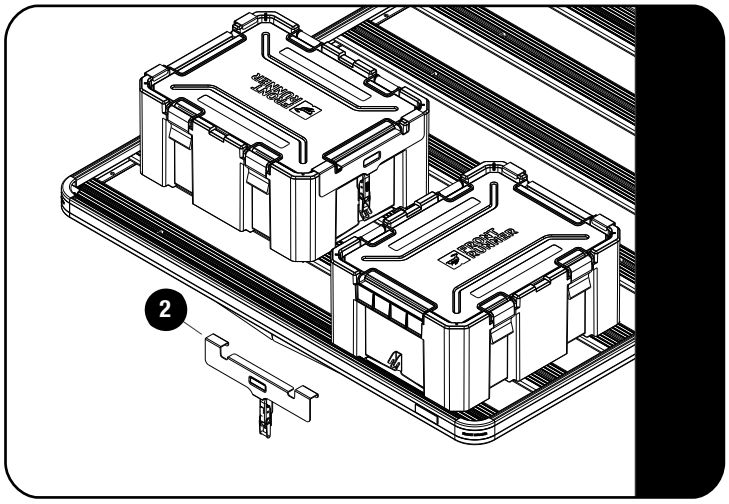

Secure the Wolf Pack Pro using the Clamp Bracket (Item 2).

© 2022 FRONT RUNNER VEHICLE OUTFITTERS

3 FINISH

Congratulations! You did it. Take a step back and admire your work!

4 INSTALL OTHER VEHICLE AND RACK ACCESSORIES

Now's the time to visit your favorite Front Runner Dealer in person or online.

Be sure to tag us. We love to see our gear in action! #FrontRunnerOutfitters #BornToRoam

Share your adventures on:

© 2022 FRONT RUNNER VEHICLE OUTFITTERS