START HERE!

READ ME FIRST

Don't be a hero and muscle through this installation without reading these fitting instructions first! Improper installation of this gear may void certain aspects of your warranty.

Before you begin, take a moment and open all your Front Runner rack kit boxes and gather the assembly instructions for the various components.

A complete kit will contain:

1. A Front Runner Mounting System specific to your vehicle
2. A Front Runner Rack Tray or Load Bar Slats

This document will guide you through the assembly of the mounting system and assist you in fitting the roof rack tray or load bars to your specific vehicle.

Please refer to the next page for a list of all the components, quantities and tools required.

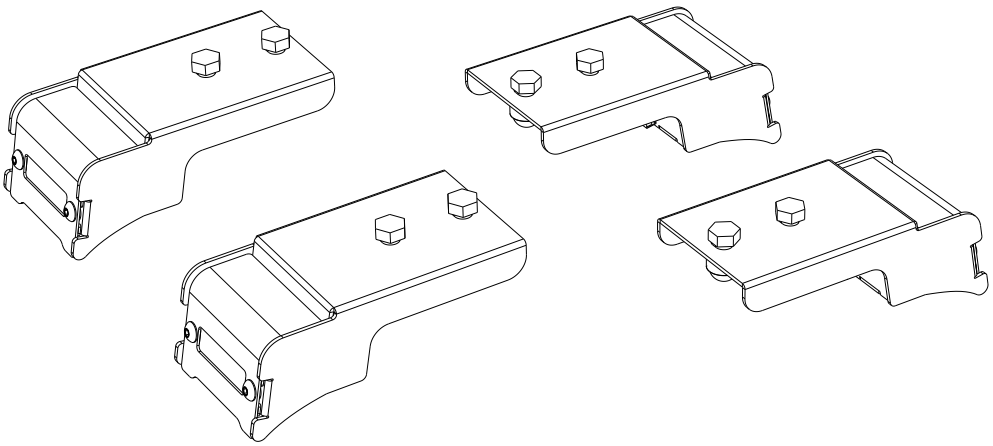

IMPORTANT WARNING! ⚠

IT IS CRITICAL THAT ALL FRONT RUNNER PRODUCTS BE PROPERLY AND SECURELY ASSEMBLED AND ATTACHED TO YOUR VEHICLE. IMPROPER ATTACHMENT COULD RESULT IN AN AUTOMOBILE ACCIDENT, AND COULD CAUSE SERIOUS BODILY INJURY OR DEATH. YOU ARE RESPONSIBLE FOR ASSEMBLING AND SECURING ALL FRONT RUNNER PRODUCTS TO YOUR VEHICLE, CHECKING THE ATTACHMENTS PRIOR TO USE, AND PERIODICALLY INSPECTING THE PRODUCTS FOR ADJUSTMENT, WEAR AND DAMAGE. THEREFORE, YOU MUST READ AND UNDERSTAND ALL OF THE INSTRUCTIONS AND PRECAUTIONS SUPPLIED WITH YOUR FRONT RUNNER PRODUCT PRIOR TO INSTALLATION OR USE. IF YOU DO NOT UNDERSTAND ALL OF THE INSTRUCTIONS AND CAUTIONS, OR IF YOU HAVE NO MECHANICAL EXPERIENCE AND ARE NOT THOROUGHLY FAMILIAR WITH THE INSTALLATION PROCEDURES, YOU SHOULD HAVE THE PRODUCT INSTALLED BY A PROFESSIONAL INSTALLER OR OTHER QUALIFIED PERSONNEL.

NOTE: Front Runner will not be responsible for any damage caused by the failure to install the product according to these instructions.

Please call us if you have any questions about the installation of this product.

 © COPYRIGHT 2024 FRONT RUNNER VEHICLE OUTFITTERS

1 GET ORGANIZED

IN THE BOX

1	4 X	M8 x 16 Hex Bolt
2	2 X	Rail Grip Foot
3	4 X	M8x19x2ss Flat Washer
4	4 X	M8 Nyloc Nut
5	4 X	M8 Nut Cap
6	2 X	M6 x 20 x 2 Flat Washer
7	2 X	M6 Spring Washer
8	2 X	M6 x 60 Cap Screw
9	2 X	Front Cover Plate
10	4 X	M5 x 10 Button Head
11	2 X	M6 x 50 Cap Screw
12	2 X	M6 Cage Nut

TOOLS NEEDED

FIGURE 1.1

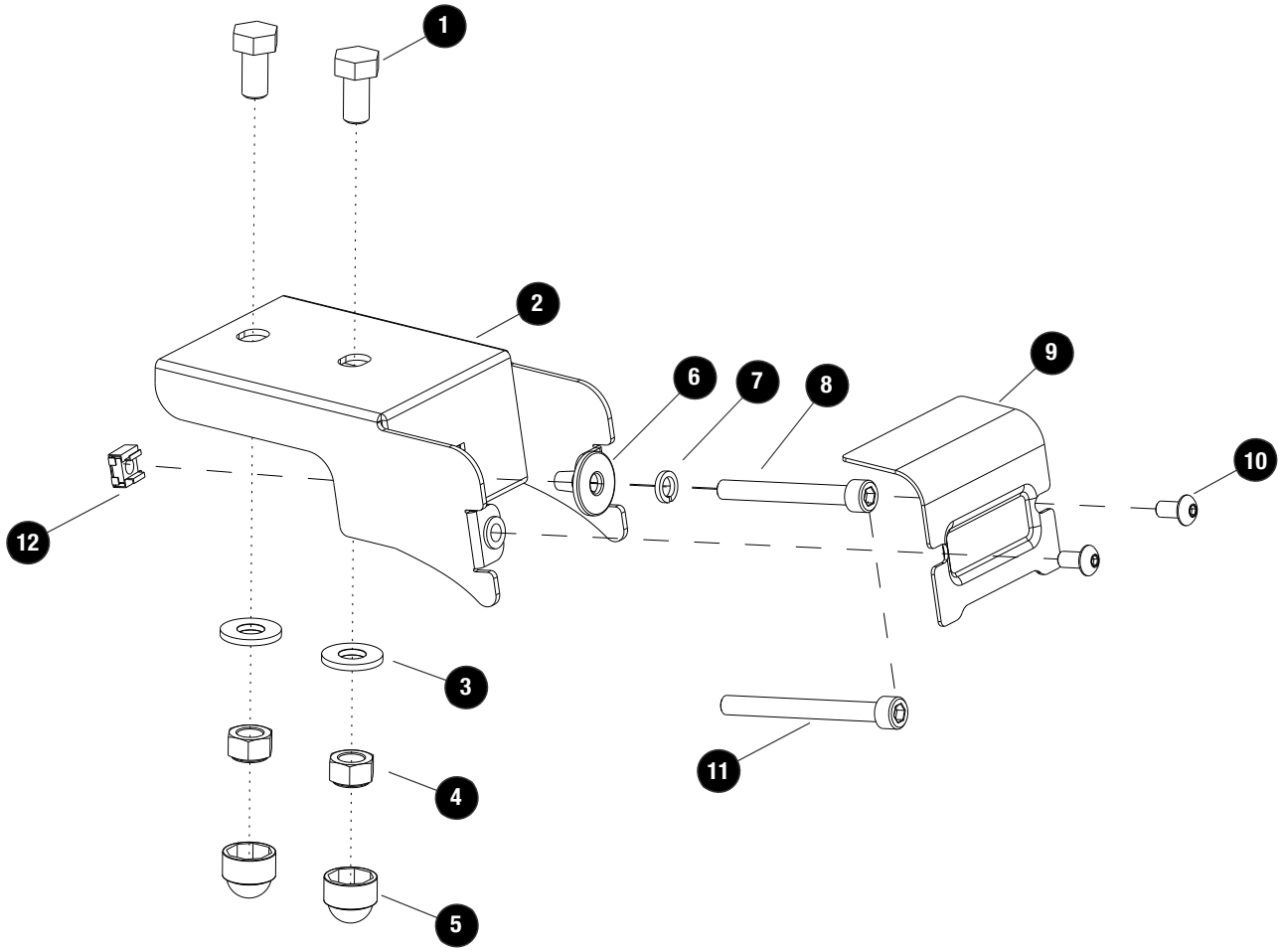

 © COPYRIGHT 2024 FRONT RUNNER VEHICLE OUTFITTERS

2 FIT AND SECURE

2.1

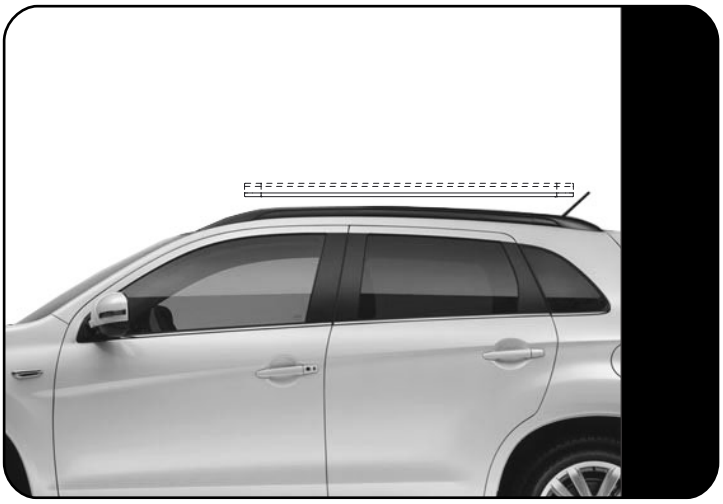

With the help of a friend, hold your Front Runner Roof Rack over your vehicle's Flush Rails. Find the best position to mount.
The Rack should sit level to the ground, not the vehicle's roof line, or slanting slightly down toward the front.

Find the best position to mount the Feet to the Rack using the first or second Slat.

Remove the Rack from the vehicle.

2.2

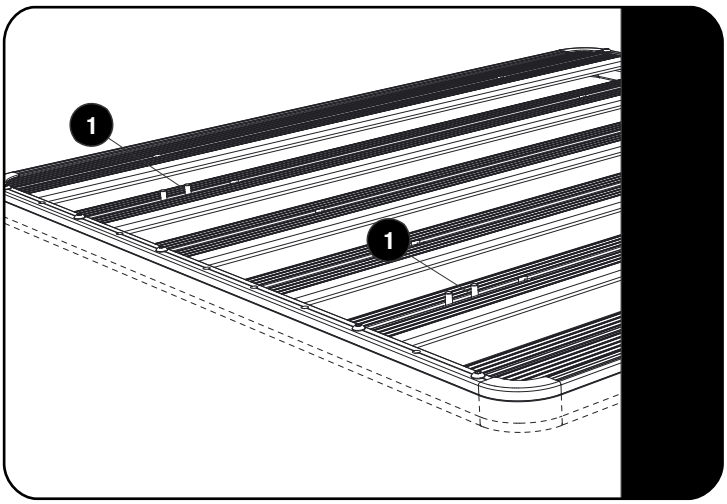

Flip the Rack so that the bottom of the Rack faces up. Insert two M8 x 16 Hex Bolts (Item 1) into the Slats machined slots that you have identified.

2.3

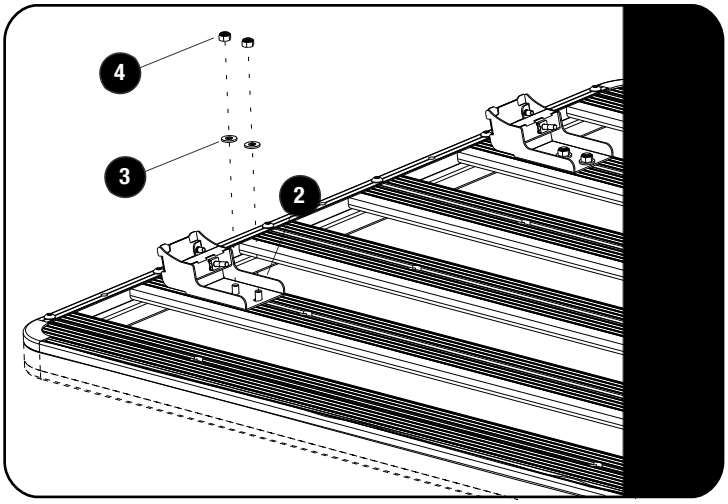

Fit the Rail Foot Base (Item 2) to the slat by loosely fastening it with two M8 Flat Washers (Item 3) and two M8 Nyloc Nuts (Item 4).

Repeat this step for the other Feet.

© COPYRIGHT 2024 FRONT RUNNER VEHICLE OUTFITTERS

2 FIT AND SECURE

2.4

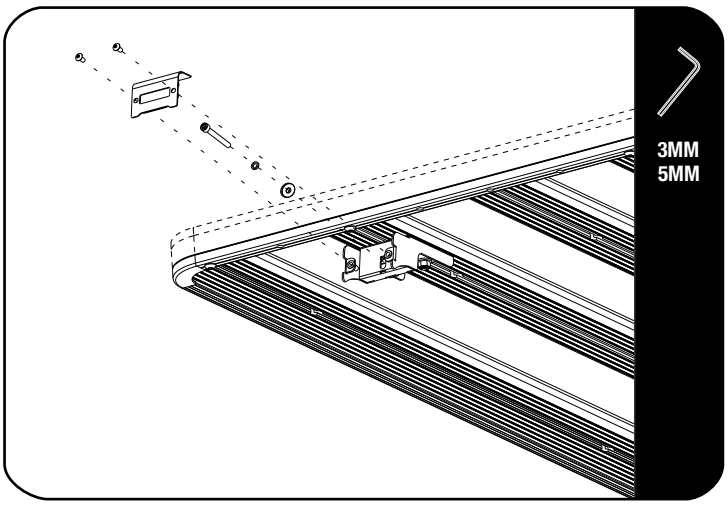

Remove the Front Covers (Item 9) from all the Base Feet (Item 2) by loosening the two M5 x 10 Button Head Screws (Item 10).

Loosen and remove (Item 8, 7 & 6) keep in a safe place as this will be used in the next step to fit the grips.

2.5

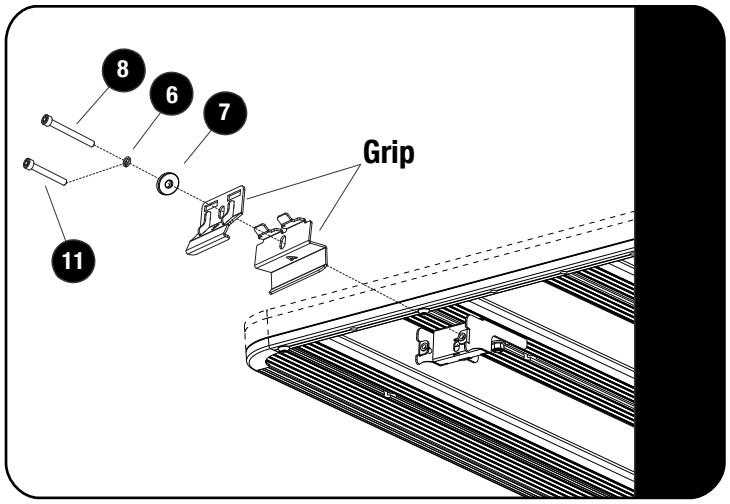

Depending on the width of the Rail, use an M6 x 60 or M6 x 50 Allen Cap Screw (Item 8 or 11), M6 Spring Washers, Washer (Items 7 & 6). Loosely fit the Grip to the Base Foot (Item 2).

Repeat this step on the other Base Feet.

2.6

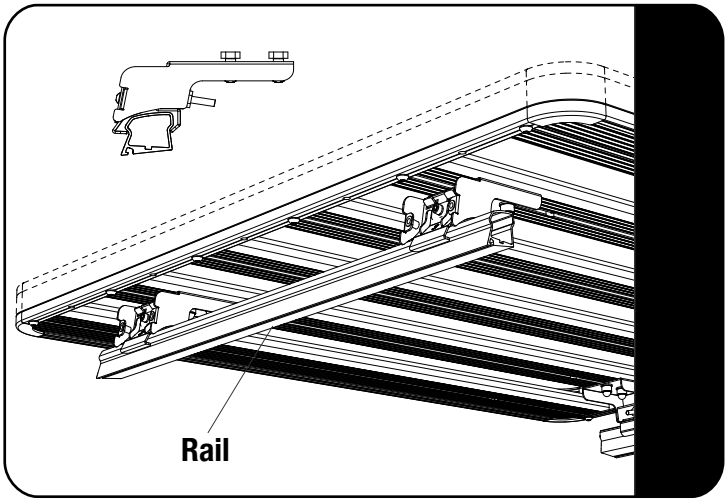

Place your Rack back onto the vehicle.

Position all the feet so that they rest on top of the Flush Rails as shown.

© COPYRIGHT 2024 FRONT RUNNER VEHICLE OUTFITTERS

2 FIT AND SECURE

2.7

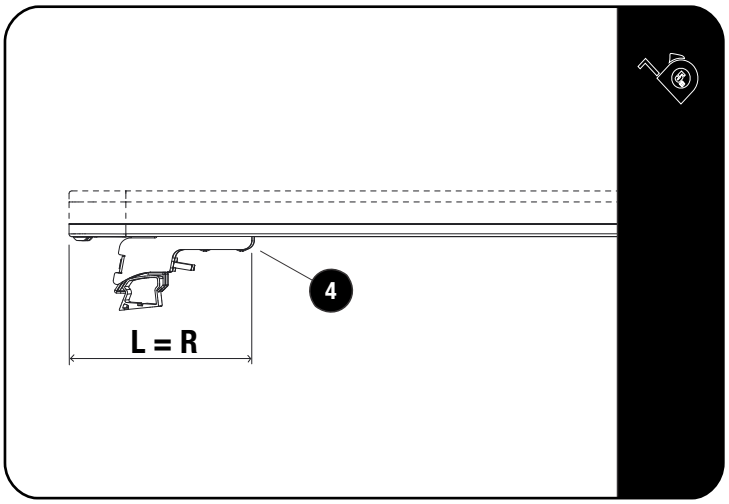

With a measuring tape, center your Roof Rack from left to right.

2.8

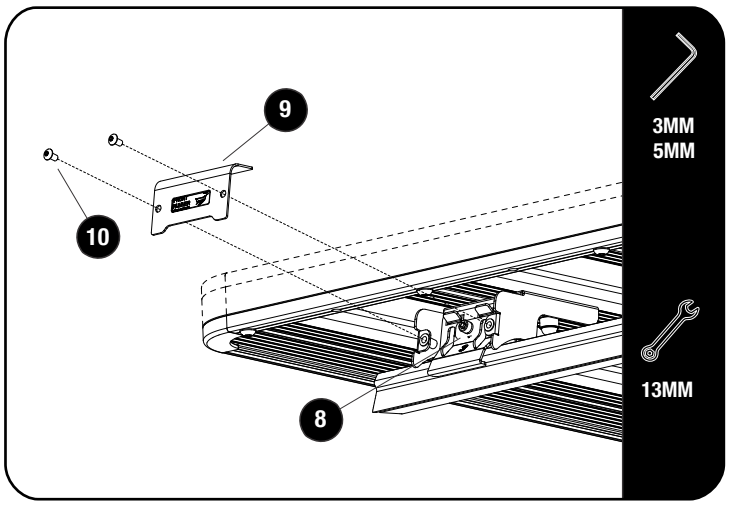

Fully tighten all the M6 x 50 or M6 x 60 Cap Screws (Item 8) to securethe Rack onto the rails.

Tightening Torque 6Nm

Fully Tighten all the M8 Nyloc Nuts (Item 4) and cover each of them with M8 Nut Caps (Item 5).

Make sure there are no movement on the rack after fully tightening all the fasteners.

Refit the Front Cover Plates (Item 9) with the M5 x 10 Button Heads (Item 10).

3 INSTALL OTHER VEHICLE AND RACK ACCESSORIES

Now's the time to visit your favorite Front Runner Dealer in person or online.

IMPORTANT!

Front Runner rack kits often have a higher load rating than the vehicles they are mounted to. Please refer to your specific vehicle manufacturer for a recommended roof load rating. Front Runner cannot be responsible for improper loading beyond the vehicle manufacturer's stated load capacity.

Be sure to tag us. We love to see our gear in action! #FrontRunnerOutfitters #BornToRoam

Share your adventures on:

© COPYRIGHT 2024 FRONT RUNNER VEHICLE OUTFITTERS