FRONT RUNNER
VEHICLE OUTFITTERS

AUXILIARY 68L FUEL TANK

TOYOTA HILUX DC 2005-CURRENT

ENG

FTTH010

90 min

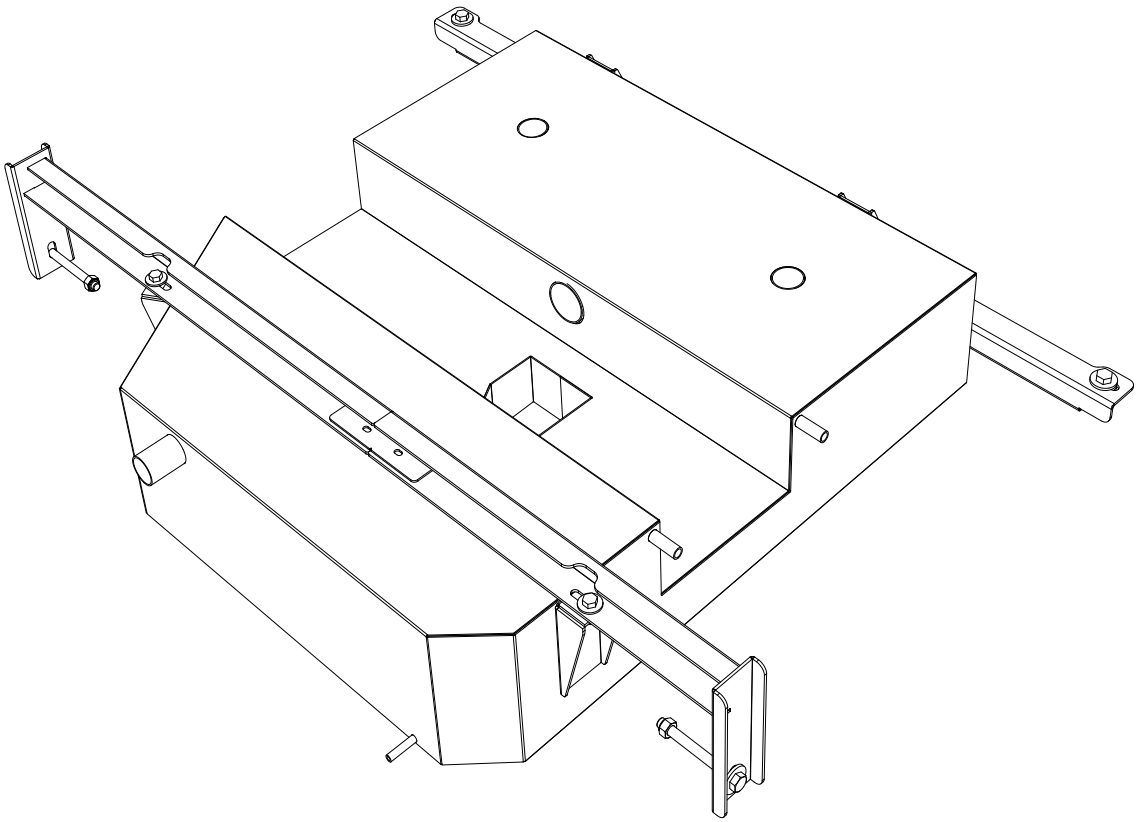

READ ME !

Thank you for purchasing a Front Runner Toyota DC 2005 - Current Fuel Tank.

Before you start, take a moment to familiarize yourself with this Fitting Instruction and the components received.

Refer to Page 2 for a list of all the components, quantities and tools required.

IMPORTANT WARNING!

IT IS CRITICAL THAT ALL FRONT RUNNER PRODUCTS BE PROPERLY AND SECURELY ASSEMBLED AND ATTACHED TO YOUR VEHICLE.

IMPROPER ATTACHMENT COULD RESULT IN AN AUTOMOBILE ACCIDENT, AND COULD CAUSE SERIOUS BODILY INJURY OR DEATH.

YOU ARE RESPONSIBLE FOR ASSEMBLING AND SECURING ALL FRONT RUNNER PRODUCTS TO YOUR VEHICLE. CHECKING THE ATTACHMENTS PRIOR TO USE, AND PERIODICALLY INSPECTING THE PRODUCTS FOR ADJUSTMENT, WEAR AND DAMAGE.

THEREFORE YOU MUST READ AND UNDERSTAND ALL OF THE INSTRUCTIONS AND PRECAUTIONS SUPPLIED WITH YOUR FRONT RUNNER PRODUCT PRIOR TO INSTALLATION OR USE.

IF YOU DO NOT UNDERSTAND ALL OF THE INSTRUCTIONS AND CAUTIONS, OR IF YOU HAVE NO MECHANICAL EXPERIENCE AND ARE NOT THOROUGHLY FAMILIAR WITH THE INSTALLATION PROCEDURES,

YOU SHOULD HAVE THE PRODUCT INSTALLED BY A PROFESSIONAL INSTALLER OR OTHER QUALIFIED PERSONNEL.

© COPYRIGHT 2016 FRONT RUNNER VEHICLE OUTFITTERS

1 GET ORGANIZED

Here is what you are looking at for FTTH010

IN THE BOX

1	1 X	Rear Bracket Part 1
2	1 X	Rear Bracket Part 2
3	1 X	Auxiliary Fuel Tank
4	1 X	Front Bracket Part 1
5	1 X	Front Bracket Part 2

TOOLS NEEDED

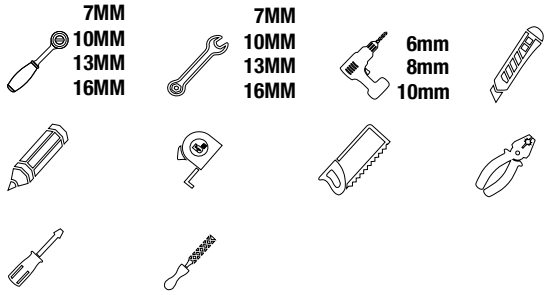

Thread locker (Loctite)
Suitable Cable Ties (Step 4.8)
Sand Paper

FIGURE 1.1

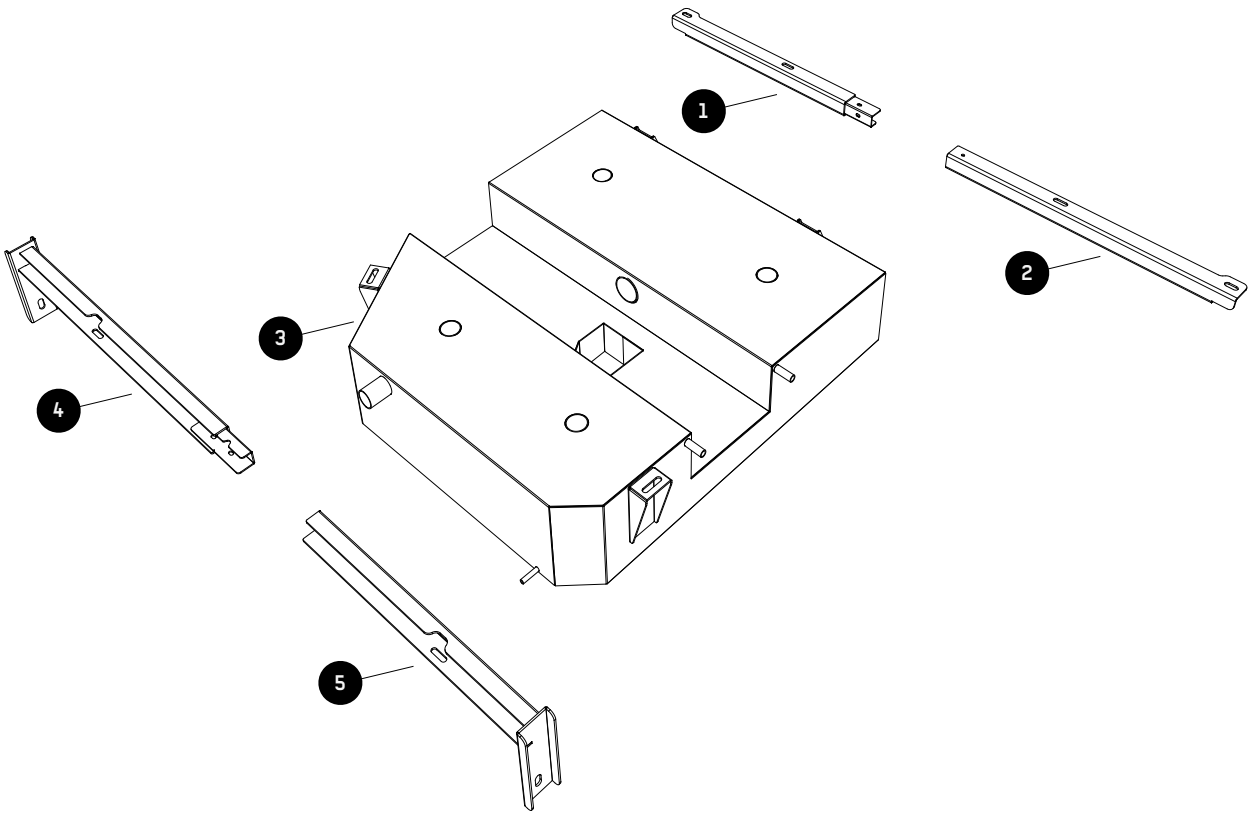

 © COPYRIGHT 2016 FRONT RUNNER VEHICLE OUTFITTERS

1 GET ORGANIZED

Here is what you are looking at for FTTH010

IN THE BOX		
6	1 X	Plastic Filler Hose
7	1 X	Fuel Hose - 12mm x 1000mm Long
8	1 X	Fuel Hose - 8mm x 280mm Long
9	2 X	Fuel Hose - 12mm x 550mm Long
10	2 X	Fuel Hose - 12mm x 78mm Long
11	1 X	Fuel Hose - 32mm x 100mm Long
12	2 X	Rubber Bung
13	1 X	Fuel Hose - 12mm x 40mm Long
14	2 X	Nylon T-Piece 12x12x12
15	10 X	Hose Clamp 16-25mm
16	6 X	Hose Clamp 32-50mm
17	2 X	Hose Clamp 8-16mm
18	2 X	M10 x 100 Hex Bolt
19	1 X	Hooking Wire

IN THE BOX		
20	4 X	M6 x 12 x 1 SS Flat Washers
21	2 X	M8 x 25 x 2 Flat Washer
22	8 X	M10 x 30 Flat Washer
23	2 X	M6 Nyloc Nut
24	4 X	M8 Nyloc Nut
25	4 X	M10 Nyloc Nut
26	2 X	M6 x 16 Hex Bolt
27	4 X	M8 x 25 Hex Bolt
28	2 X	M10 x 30 Hex Bolt
29	2 X	M10 x 50 x 3 Flat Washer
30	1 X	Y - Filler
31	1 X	Balance Fitting
32	1 X	Copper Wire
33	2 X	Cable Tie

FIGURE 1.2

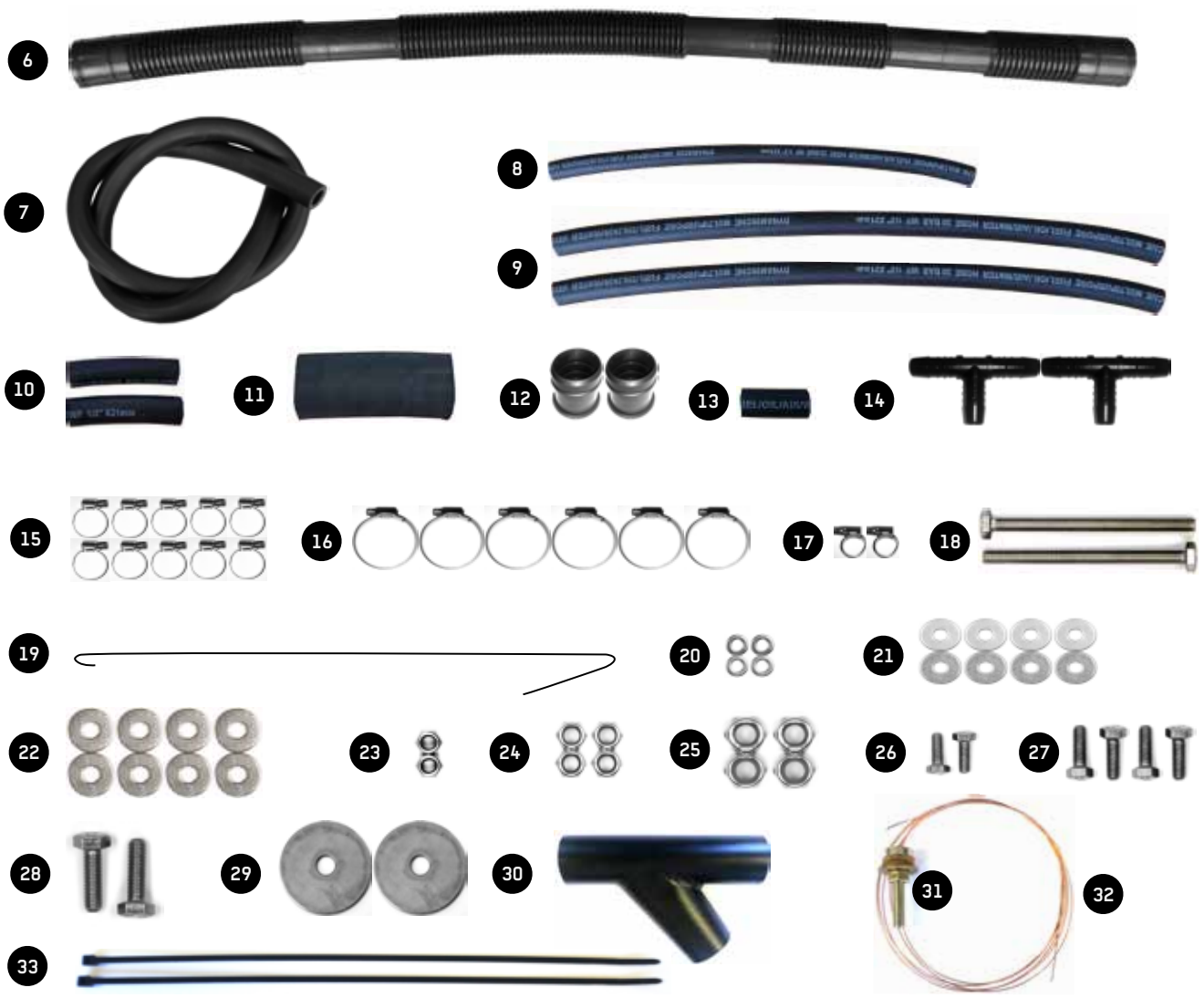

© COPYRIGHT 2016 FRONT RUNNER VEHICLE OUTFITTERS

2 PREPARATION FOR FITMENT

2.1

NOTE:

- This installation is applicable to Toyota Hilux models made from 2005 - current. Some Steps differ between the 7th Generation and the 8th Generation.
- Please ensure the fuel tank is half full before starting with the installation.
- Try to position all hose clamps in such a manner that they are easily accessible in the event of a possible fuel leak.

2.2

Holes need to be drilled into the chassis of the 2005 - 2015 models in order the secure the front bracket. Drill an 6mm pilot hole, through the chassis as shown. Center the hole within the existing slot. Increase the pilot hole to 10mm. Repeat on the left side of the vehicle.

2.3

Remove the spare wheel from underneath the vehicle.

Loosen the left rear wheel arch liner in order to access the vehicles filler neck.

© COPYRIGHT 2016 FRONT RUNNER VEHICLE OUTFITTERS

2 PREPARATION FOR FITMENT

2.4

If you look closely at the back of the plastic fuel tank fitted to your vehicle, you will see a round circles molded into the plastic.

Grab your drill and 8mm drill bit and drill a hole using the circle as your marking point of where to drill.

2.5

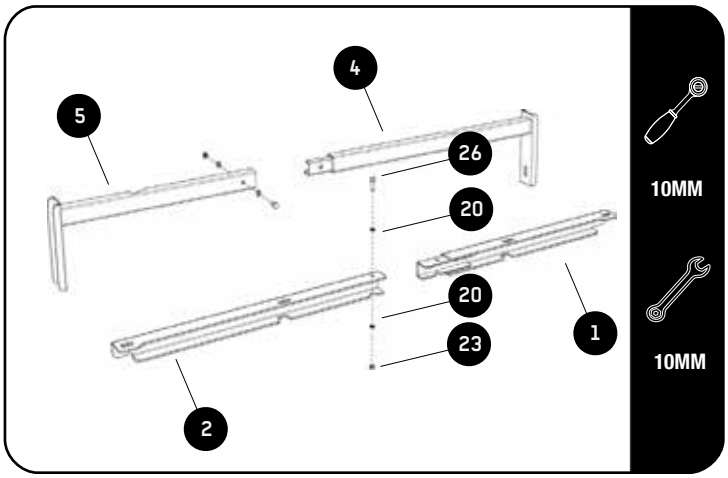

Assemble the Front and Rear Brackets (Items 1, 2, 4 & 5) using the M6 x 16 Hex Bolts, M6 Flat Washers and M6 Nyloc Nuts (Items 26, 20 & 23) as shown.

2.6

Position the Front Bracket assembly over the outside of the chassis with the open face of the "U" channel facing the front of the vehicle. Line up the mounting holes in the Bracket assembly with the holes drilled in Step 2.2 and loosely secure the assembly to the vehicle using the two M10 x 100 Hex Bolts, two M10 Flat Washers on the outside, two M10 x 50 x 3 Flat Washers on the inside and two M10 Nyloc Nuts (18, 22, 29 & 25).

© COPYRIGHT 2016 FRONT RUNNER VEHICLE OUTFITTERS

2 PREPARATION FOR FITMENT

2.7

Install the Rear Bracket assembly with open face of the "U" channel facing the rear of the vehicle. The assembly is bolted to the existing holes on either side of the chassis using the two M10 x 30 Hex Bolts, four M10 Flat Washers and two M10 Nyloc Nuts (Items 28, 22 & 25).

3 PREPARATION FOR PIPE FITMENT

3.1

Loosen the three hose clamps as shown by the arrows. Remove the main filler hose that runs between the filler neck and fuel tank. Keep the filler hose as it will be used in Step 3.5/3.6

Unclip the fuel flap release cable from the breather pipe and pull the breather pipe free of the filler neck. Loosen and remove the filler neck from the vehicle taking care not to damage the fuel flap release cable.

3.2

TOYOTA HILUX 2005 - 2015 ONLY.

With the filler neck removed, measure and mark the filler neck as shown. Cut the filler neck on each of your markings and clean any rough edges using a steel file or sandpaper. The offcuts may be discarded.

© COPYRIGHT 2016 FRONT RUNNER VEHICLE OUTFITTERS

3 PREPARATION FOR PIPE FITMENT

3.3

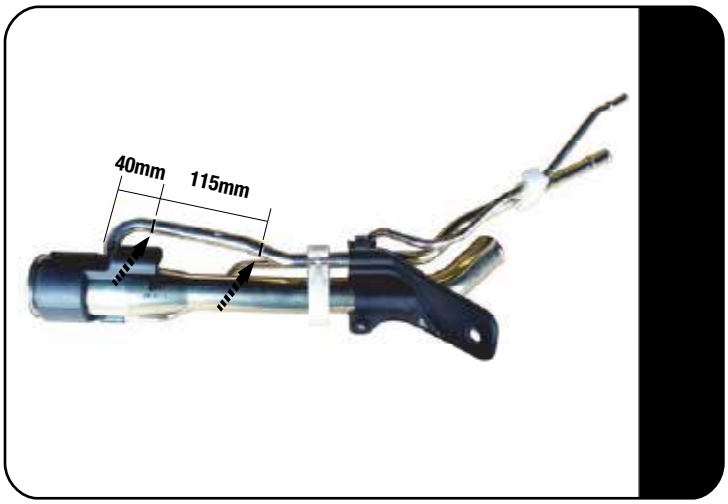

TOYOTA HILUX 2016 - CURRENT ONLY

Only the Breather Pipe is modified.
Do not trim the Fuel Filler Pipe.

Cut the 115mm section out on the breather pipe.

3.4

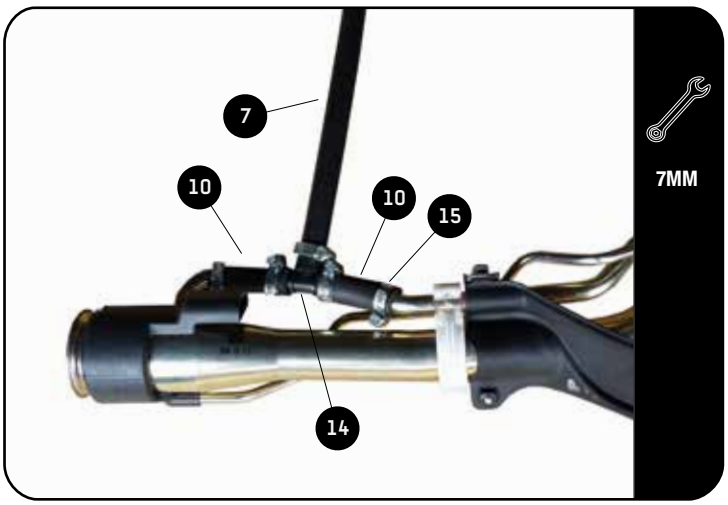

Connect the two 78mm Long - 12mm Fuel Hoses, one Plastic T-piece and 1000mm Long - 12mm Fuel Hose (Items 10, 14 & 17) to the filler neck using five 16-25mm Hose Clamps (Item 15) as shown.

3.5

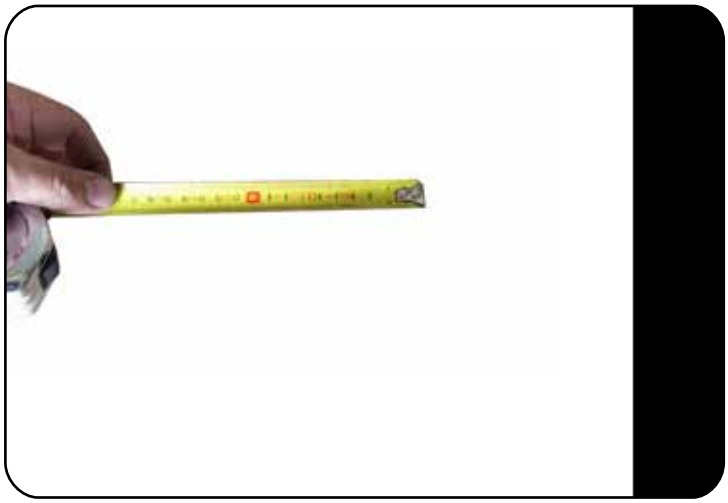

TOYOTA HILUX 2005 - 2015 ONLY

Measure, mark and cut 75mm off the straight section of the filler hose removed in Step 2.3. The 75mm long piece of hose will be used in Step 4.6. The remaining section may be discarded.

© COPYRIGHT 2016 FRONT RUNNER VEHICLE OUTFITTERS

3 PREPARATION FOR PIPE FITMENT

3.6

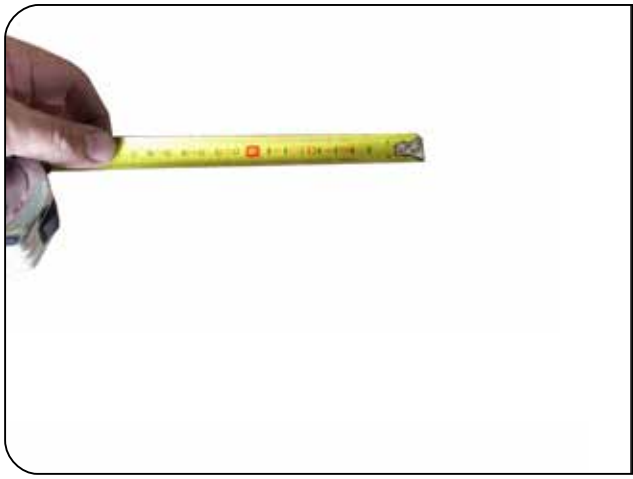

TOYOTA HILUX 2016 - CURRENT

Measure, mark and cut 130mm off the straight section of the filler hose removed in Step 2.3. The 130mm long piece of hose will be used in Step 4.6. The remaining section may be discarded.

3.7

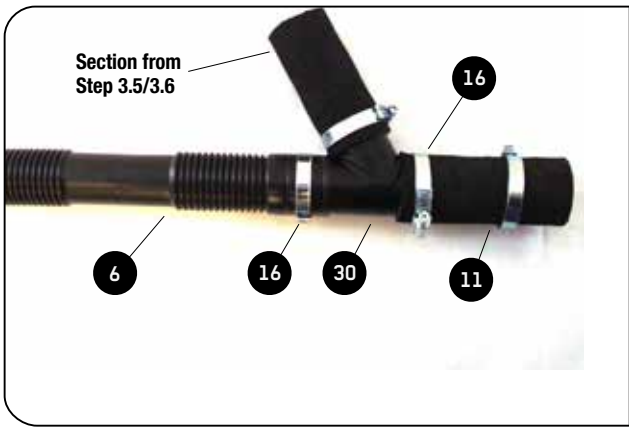

Insert a Rubber Bung (Item 12) into either end of the Plastic Filler Hose (Item 6) as shown.

Assemble the Plastic Filler Hose, the 100mm long - 32mm Fuel Hose (Item 11) and the 75mm/130mm section of hose from Steps 3.5/3.6 to the Y-filler (Item 30) as shown. Secure the hoses in position using three 32-50mm Hose Clamps (Item 16).

4 FIT AND CONNECT THE TANK

4.1

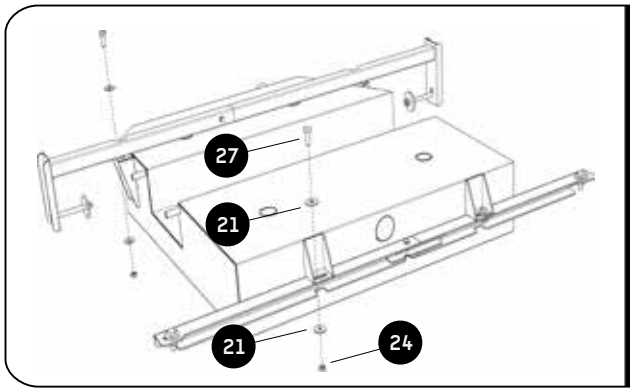

Lift the Auxiliary Tank (Item 1) into position making sure the the chain used to hold and tighten the spare wheel in position is placed through the hole in the center of the tank. Maneuver the Tank so that the rear mounting brackets sit flush on top of the back bracket. Lift the front of the Tank upwards and rotate the front bracket until the mounting holes in the bracket line up with the mounting holes on the Tank. Secure the Tank into position using the four M8x25 Hex Bolts, eight M8x25 Flat Washers and four M8 Nyloc Nuts (Items 27, 21 & 24)

© COPYRIGHT 2016 FRONT RUNNER VEHICLE OUTFITTERS

4 FIT AND CONNECT THE TANK

4.2

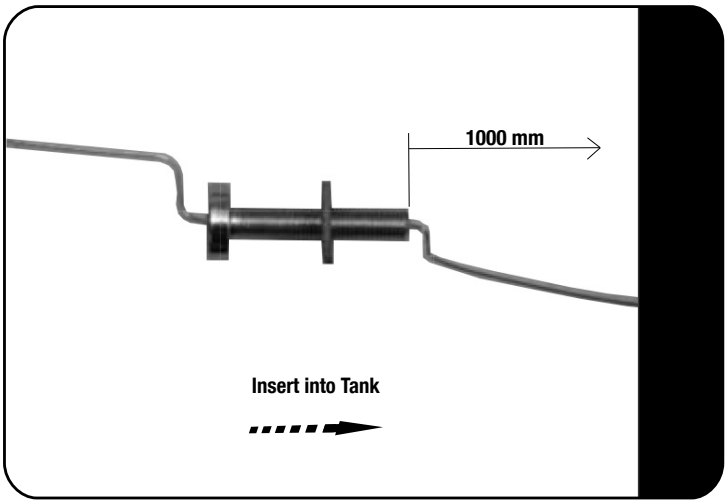

The Copper Wire (item 32) needs to be modified. Measure a 1m length of wire from either end. Make a kink in the wire and slide the Balance Fitting (Item 31) onto the wire as shown. Ensure that the Balance Fitting has only ONE Fiber Washer on its threads. Make another kink in the wire after the Balance Fitting. Make sure that there is some play for the Balance Fitting along the length of the wire.

The wire and Balance Fitting assembly must be inserted into the vehicles original tank through the original filler hose port, thread and Fibre Washer end first. Keep the left end of the wire sticking out the tank.

4.3

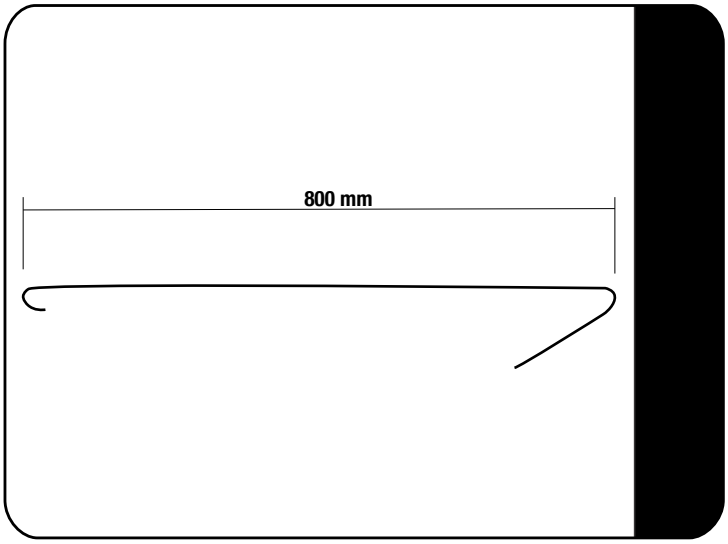

Insert the Hooking Wire (Item 19), hook end first into the 8mm hole drilled in 2.4. Locate the wire within the original tank and pull the Balance Fitting through the 8mm hole. Fasten the Balance Fitting to the tank using the remaining Fibre Washer and Nut supplied. Flatten the kink on the wire and pull the copper wire out from the top of the original tank.

4.4

Connect the Auxiliary Tank to the vehicles main tank using the 450mm Long - 8mm Fuel Hose (Item 8). Secure the hose in position using two 8-16mm Hose Clamps (Item 17) as shown.

© COPYRIGHT 2016 FRONT RUNNER VEHICLE OUTFITTERS

4 FIT AND CONNECT THE TANK

4.5

Secure the Y-piece and Hose assembly from Step 3.7 to the vehicles original tank as shown, using a 32-50mm Hose Clapm (Item 16).

4.6

Re-install the filler neck. Start by pushing the top of the filler neck through the rubber seal, so that you can see the filler neck through the fuel flap from the outside of the vehicle. Do not tighten the bracket onto the chassis yet. Connect and secure the filler neck to the 32mm Fuel Hose (Item 11) form Step 3.5/3.6 using a 32-50mm Hose Clamp (Item 16). Fasten the bracket on the filler neck to the chassis. Tighten the hose clamps.

Re-connect the original breather pipe to the filler neck using the original hose clamp. Re-attach the fuel flap cable to the breather pipe.

4.7

Route the 1000mm Long - 12mm Fuel Hose (Item 7) connected to the filler neck in Step 3.4, down the inside of the vehicle and over the wheel arch liner as shown.

© COPYRIGHT 2016 FRONT RUNNER VEHICLE OUTFITTERS

4 FIT AND CONNECT THE TANK

4.8

Using the remaining Plastic T-piece and three 16-25mm Hose Clamps (Item 15), connect the two 450mm Long - 12mm Fuel Hose (Item 9) to the 12mm Fuel Hose running from the filler neck in Step 4.6 as shown

Cable tie the hoses to an existing hole on the chassis as shown.

4.9

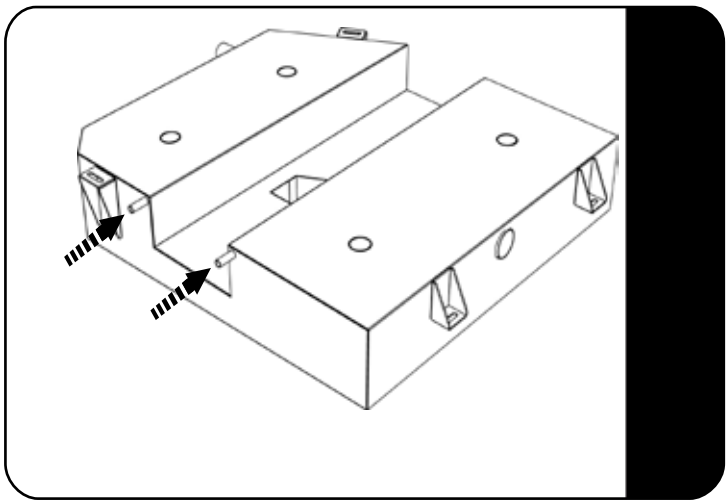

Using the two remaining 16-25mm Hose Clamps (Item 15), secure the two 12mm Hoses from Step 4.5 to the breather ports on the Auxiliary Fuel Tank indicated by the arrows.

4.10

Using the two Cable Ties and 40mm Long - 12mm Fuel Hose (Items 13 & 33), secure the Plastic Filler Hose to the chassis cross member as shown.

Check that All fasteners, hoses and fittings are tight and secured and refit the wheel arch liner.

© COPYRIGHT 2016 FRONT RUNNER VEHICLE OUTFITTERS

5 COMPLETION

5.1

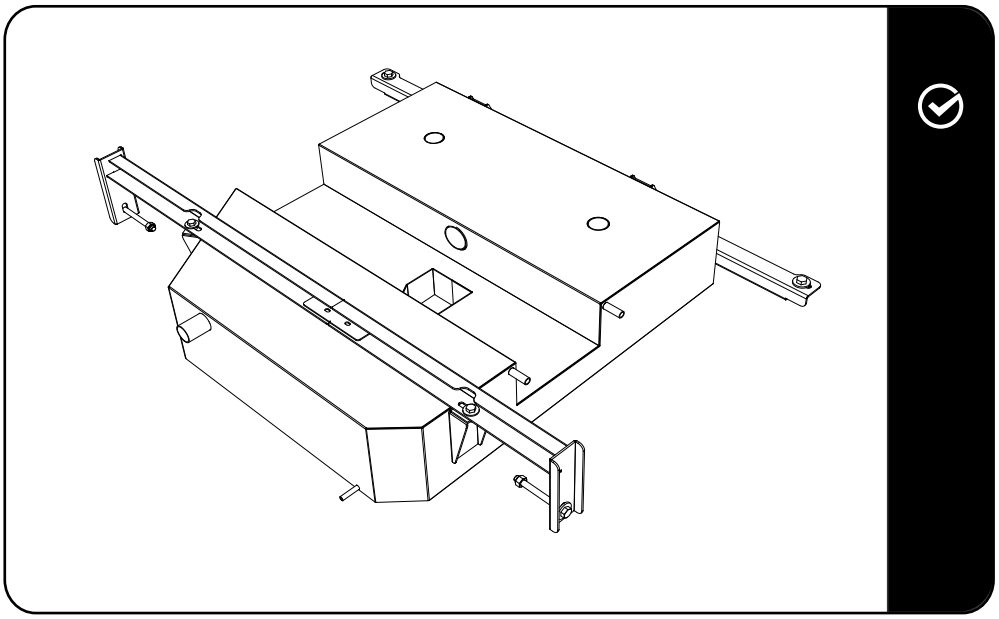

Congratulations. You did it. Take a step back and admire your work!

Front Runner will not be responsible for any damage caused by the failure to install the product according to these instructions. Please call us if you have any questions about the installation of this product.

6 INSTALL OTHER VEHICLE AND RACK ACCESSORIES

Now's the time to visit your favorite Front Runner Dealer in person or Online.

© COPYRIGHT 2016 FRONT RUNNER VEHICLE OUTFITTERS

ATTENTION FITMENT CENTER: THIS PAGE MUST BE LEFT IN THE VEHICLE FRO THE CUSTOMER!

IMPORTANT WARNING! ⚠

Do not use the fuel tank as a jacking point as it will cause damage to the tank and tank mountings. For example, do not use an air jack underneath the tank to lift the vehicle.

1 FILLING YOUR AUXILIARY FUEL TANK

1.1 **Filling using the original filler:**

When filling up your vehicle, both the main and auxiliary tank will fill up at the same time. We recommend that the first setting on the fuel station's fuel pump is used, allowing both tanks to fill without any airlocks.

1.2 **Filling using a secondary filler:**

When filling up your vehicle's auxiliary tank, fill as you would normally fill your main tank, using the second file

© COPYRIGHT 2016 FRONT RUNNER VEHICLE OUTFITTERS

2 TRANSFERRING FUEL BETWEEN TANKS

1.1 Gravity Fed Tanks:

The majority of the Front Runner tanks are gravity fed. Gravity feed is when your main tank is continuously being fed from your auxiliary tank. You will notice hat your fuel gauge will remain above the three quarter level mark for longer. When your fuel gauge drops below the three quarter level mark, it will be a rough indication that the auxiliary is empty. The fuel gauge will work as normal from that point onwards.

1.2 Pump Transfer Tanks:

To transfer the fuel from the auxiliary tank to the main tank you must switch the pump on at the switch (which is located inside the vehicle). The fuel pump is a 12V low pressure pump and pumps around 2 liters a minute, so ensure that you do not leave the main tank completely empty before you start to pump. We advise that you start pumping fuel when your fuel gauge reaches the quarter level mark. Make sure that you watch your fuel gauge and switch the pump off as soon as the fuel has transferred into your main tank.

When switching the pump on you will hear a soft ticking noise, when the fuel has been completely pumped into the main tank and the auxiliary tank is empty, the pump will make a loud ticking noise. The pump must be switched off as soon as you hear this noise. The loud ticking noise indicates that the pump is running dry witch will damage it if left unattended.

3 TROUBLESHOOTING GUIDE:

Diagnosis	Solution
Pump is not working and the indicator light on the switch is off when the switch is in the "ON" Position.	- Check that the fuse for the pump is not blown - Check wiring.
The indicator light on the switch is on, but the pump is not working.	- Give the fuel pump a few light taps as the diaphragm inside the pump may be sticking as a result of contaminated fuel. If tapping does not solve the problem, further investigation is required and the pump may need to be replaced. - Check wiring.
Fuse keeps on blowing	- Check wiring.

4 FUEL TANK TESTING

4.1 All tanks developed and manufactured at Front Runner are structurally tested during development. Each tank is individually tested for manufacturing tolerances and leaks. The leak test involves the tank being pressurized to 0.4 BAR while being submerged under water for 120 Seconds, where visual inspection is undertaken to check for any leaks

© COPYRIGHT 2016 FRONT RUNNER VEHICLE OUTFITTERS