LAND ROVER DISCO LR3 & LR4 AUXILIARY 80L FUEL TANK

ENG

FTLD016

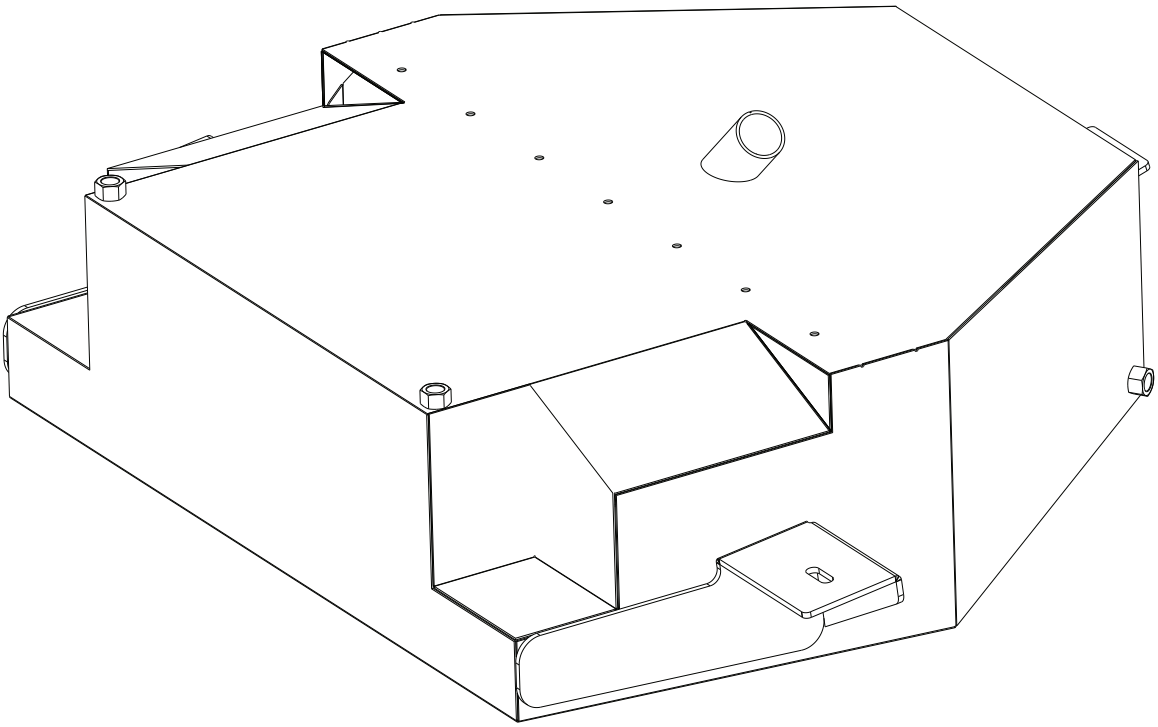

READ ME !

Thank you for purchasing a Front Runner Fual Tank.

Before you start, take a moment to familiarize yourself with the Fitting Instructions and the components received.

Refer to Page 2 for a list of all the components, quantities and tools required.

NOTE: Front Runner will not be responsible for any damage caused by the failure to install the product according to these instructions. Please call us if you have any questions about the installation of this product.

IMPORTANT WARNING!

FRONT RUNNER CAN NOT RECOMMEND A MAXIMUM LOAD CARRYING CAPACITY. PLEASE REFER TO YOUR VEHICLE MANUFACTURER'S RECOMMENDATIONS. IT IS CRITICAL THAT ALL FRONT RUNNER PRODUCTS BE PROPERLY AND SECURELY ASSEMBLED AND ATTACHED TO YOUR VEHICLE. IMPROPER ATTACHMENT COULD RESULT IN AN AUTOMOBILE ACCIDENT, AND COULD CAUSE SERIOUS BODILY INJURY OR DEATH. YOU ARE RESPONSIBLE FOR ASSEMBLING AND SECURING ALL FRONT RUNNER PRODUCTS TO YOUR VEHICLE. CHECKING THE ATTACHMENTS PRIOR TO USE, AND PERIODICALLY INSPECTING THE PRODUCTS FOR ADJUSTMENT, WEAR AND DAMAGE. THEREFORE YOU MUST READ AND UNDERSTAND ALL OF THE INSTRUCTIONS AND PRECAUTIONS SUPPLIED WITH YOUR FRONT RUNNER PRODUCT PRIOR TO INSTALLATION OR USE. IF YOU DO NOT UNDERSTAND ALL OF THE INSTRUCTIONS AND CAUTIONS, OR IF YOU HAVE NO MECHANICAL EXPERIENCE AND ARE NOT THOROUGHLY FAMILIAR WITH THE INSTALLATION PROCEDURES, YOU SHOULD HAVE THE PRODUCT INSTALLED BY A PROFESSIONAL INSTALLER OR OTHER QUALIFIED PERSONNEL.

© COPYRIGHT 2018 FRONT RUNNER VEHICLE OUTFITTERS

1 GET ORGANIZED

IN THE BOX		
1	1 X	Auxiliary Fuel Tank
2	1 X	M8 Studded Plate
3	1 X	Fuel Pump Mounting Bracket

TOOLS NEEDED

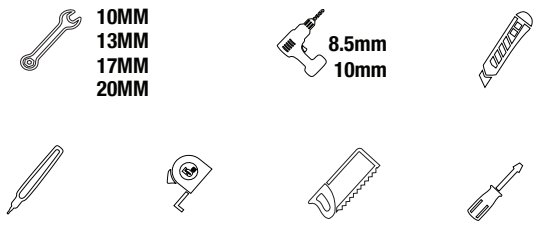

THREAD TAPE

FIGURE 1.1

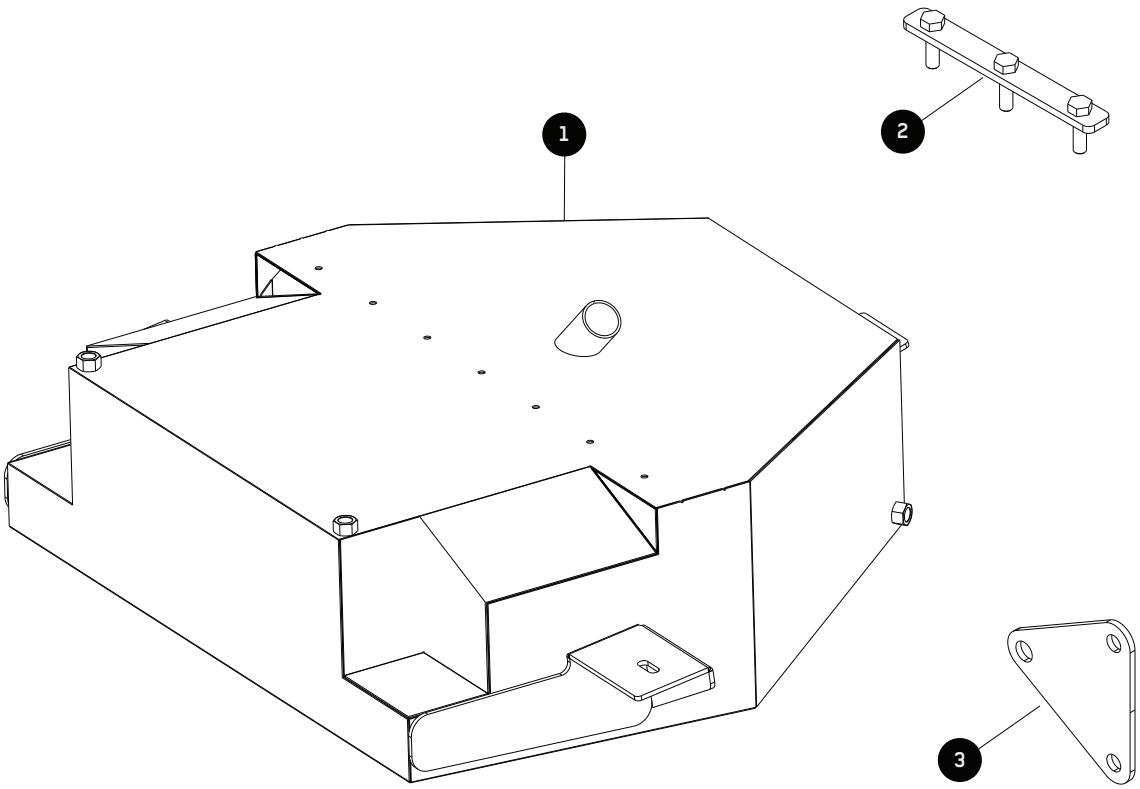

 © COPYRIGHT 2019 FRONT RUNNER VEHICLE OUTFITTERS

1 GET ORGANIZED

IN THE BOX - HOSE KIT

4	1 X	Fuel Hose - 8mm x 1000mm Long
5	2 X	Fuel Hose - 12mm x 220mm Long
6	2 X	Fuel Hose - 32mm x 100mm Long
7	1 X	Fuel Hose - 8mm x 430mm Long
8	1 X	Fuel Hose - 12mm x 2000mm Long
9	1 X	Fuel Filler Hose - 38mm x 850mm Long
10	4 X	Hose Clamp 8-16mm
11	8 X	Hose Clamp 16-25mm
12	4 X	Hose Clamp 32-50mm
13	2 X	Uni Clamp 45 - 50mm
14	1 X	Nylon T -piece (12 x 12 x 12mm)
15	1 X	T -piece (16 x 12 x 16mm)

IN THE BOX - FITMENT KIT

16	1 X	Fuel Pump
17	1 X	Filler Neck
18	1 X	15A Spade Fuse
19	1 X	Fuse Holder
20	1 X	Relay
21	1 X	Switch
22	2 X	M8 x 40 Hex Bolt
23	1 X	M8 x 20 Hex Bolt
24	2 X	M8 x 16 Hex Bolt
25	3 X	M8 Spring Washer
26	4 X	M6 x 19 x 1 Flat Washers
27	3 X	M8 Nyloc Nut
28	2 X	M6 Nyloc Nut
29	1 X	M8 x 16 x 1.6SS Flat Washer
30	2 X	M8 x 25 x 2 Flat Washers
31	2 X	M8 Square Nut with Wire Extension
32	1 X	M8 Circular Nut with Extension
33	2 X	Large Banjo Fitting
34	1 X	Small Banjo Fitting
35	4 X	M16 x 22 x 1.5 Copper Washer
36	2 X	M14 x 20 x 1 Copper Washer
37	1 X	0.8m Mig Wire
38	1 X	1.6m Welding Wire
39	1 X	Cable Tie

FIGURE 1.2

FIGURE 1.3

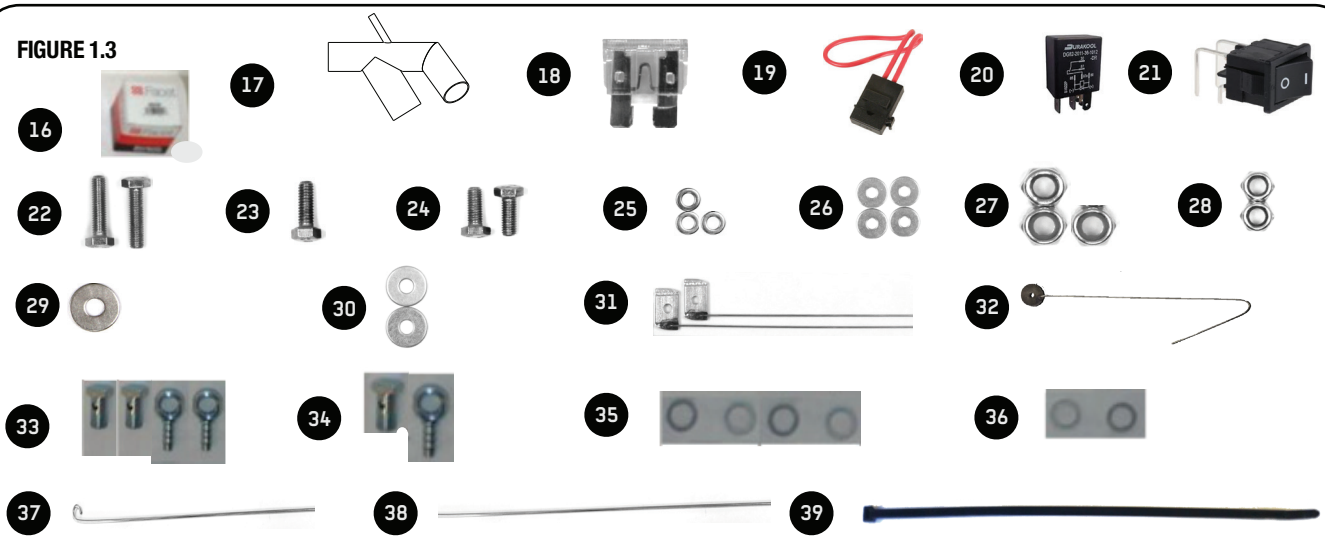

© COPYRIGHT 2019 FRONT RUNNER VEHICLE OUTFITTERS

2 PREPARATION FOR FITMENT

2.1

NOTE:

- This installation is applicable to Land Rover Discovery LR3 & LR4 models.
- Please ensure the fuel tank is half filled or less before starting with the installation.
- Try to position all hose clamps in such a manner that they are easily accessible in the event of a possible fuel leak.

2.2

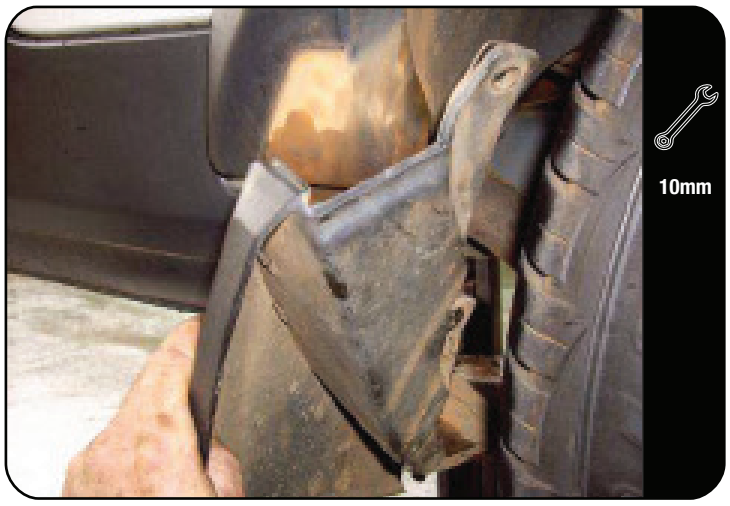

Remove the right rear mud gaurd.

2.3

Remove the wheel protection gaurd from the wheel arch.

© COPYRIGHT 2019 FRONT RUNNER VEHICLE OUTFITTERS

2 PREPARATION FOR PIPE FITMENT

2.4

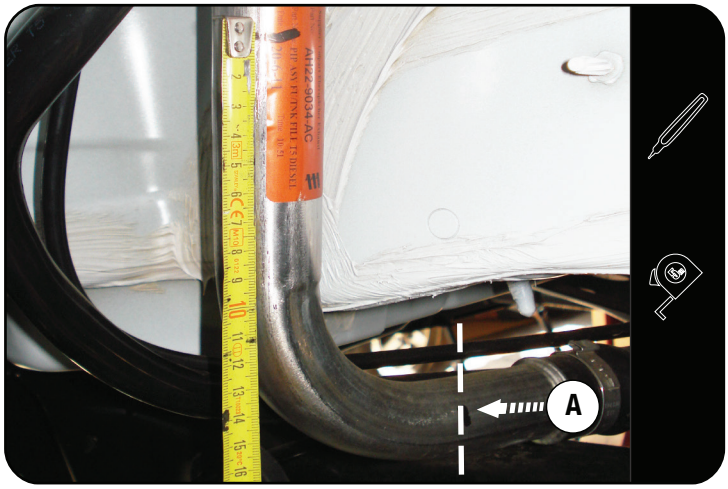

Using a marker pen measure and mark 150mm from the center line of the horizontal pipe (Item A) on the vertical pipe, as shown in 2.4.

2.5

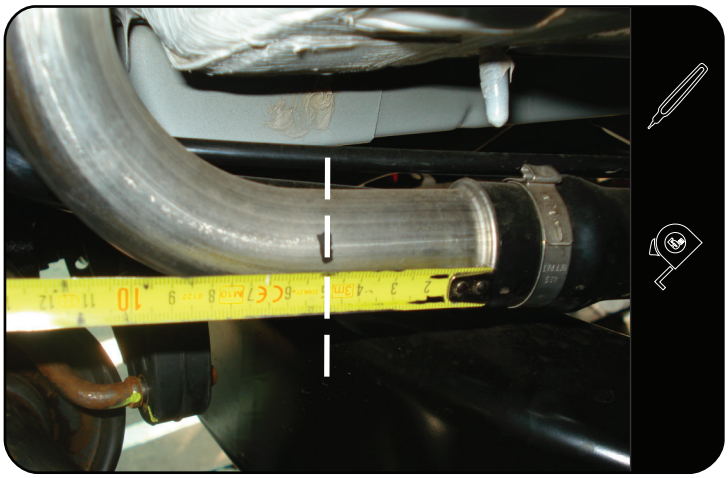

Using a marker pen measure 50mm from the orginal pipe joint, where the steel pipe meets the rubber pipe.

2.6

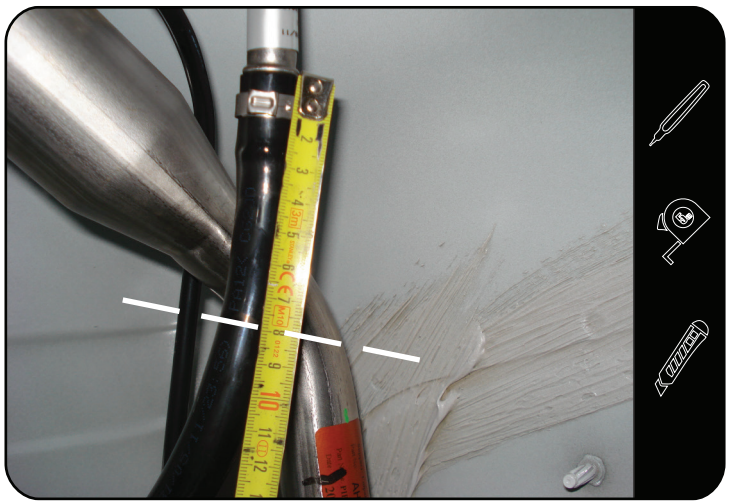

Using a marker pen measure 80mm from where the steel pipe meets the breather rubber pipe. Cut the rubber pipe on the mark.

© COPYRIGHT 2019 FRONT RUNNER VEHICLE OUTFITTERS

2 PREPARATION FOR PIPE FITMENT

2.7

Using a pipe cutter, cut the pipe at the marked location in 2.4 and 2.5.

2.8

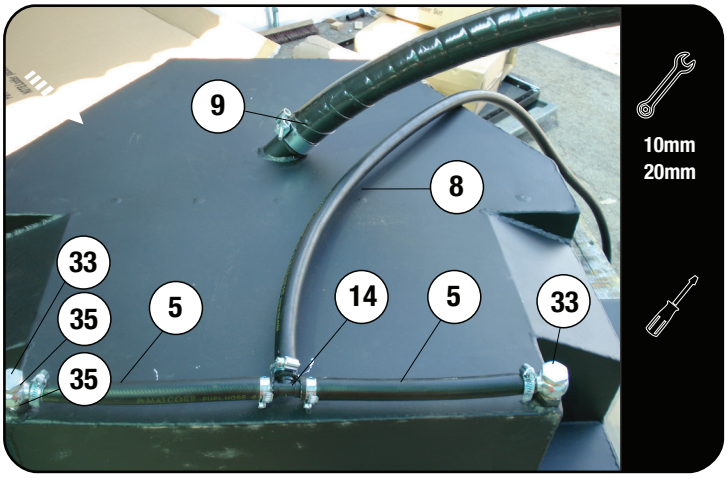

Wrap the Banjo bolts (Item 33 & 34) in thread seal tape, ensure that both of the banjo fittings (Item 33) are fastened pointing inward with copper washers (Item 35). Clamp the 12mm fuel pipes (Item 5) to the banjo bolts. Clamp both banjo bolts (Item 5) to the nylon T-piece (Item 14).

Clamp the 12mm fuel pipe (Item 8) to the junction of the T-piece. Clamp the 38mm reinforced fuel hose (Item 9) to the top of the tank with the Uni-clamp (Item 13).

2.9

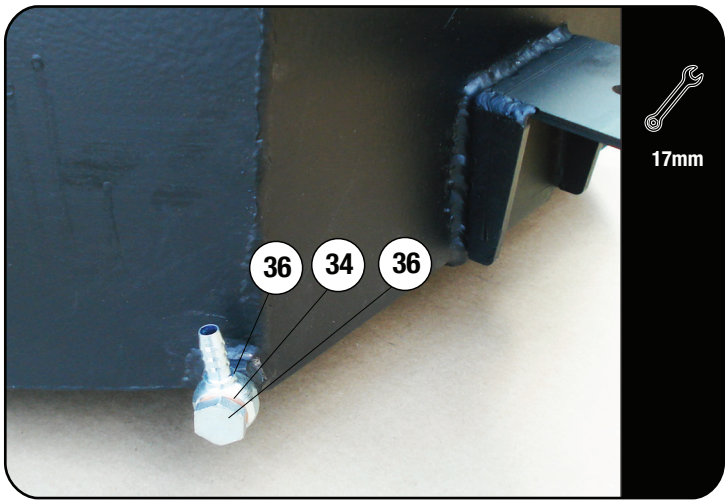

Using the wrapped Banjo bolts (Item 34), fasten it as shown in 2.9.

© COPYRIGHT 2019 FRONT RUNNER VEHICLE OUTFITTERS

3 PREPARATION FOR FITMENT

3.1

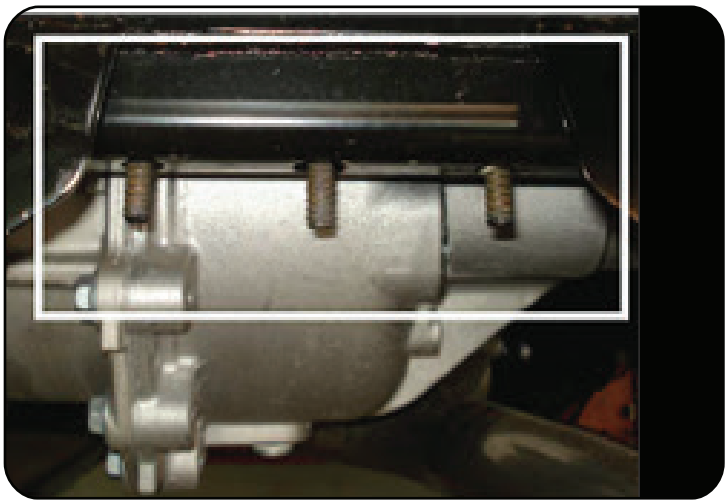

Using the M8 stud plate (Item 2) drop it into the cross member behind the rear diff. The middle stud is going to support the tank and the outside studs are for a tank gaurd.

3.2

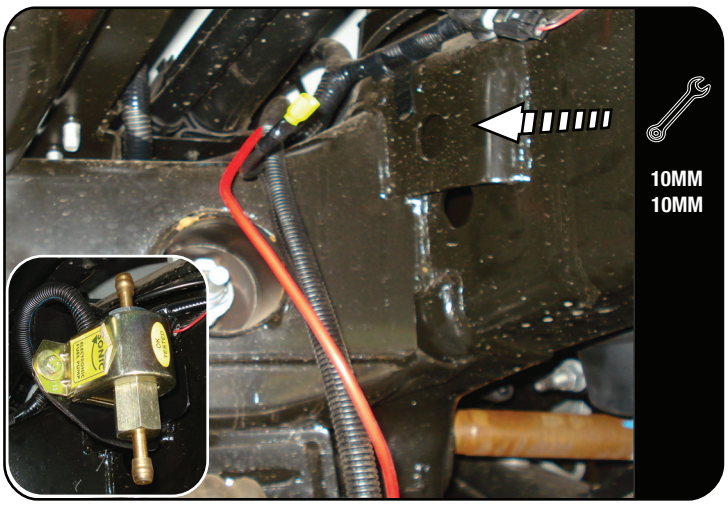

Using the Fuel Pump Mounting Bracket (Item 3) mount the bracket to the chassis as show in 3.1 using two M6 x 16 Hex Bolts, two M6 Flat Washers and two M6 Nyloc Nuts (Item 24, 26 & 28).

Fasten the Fuel pump (Item 16) to the two smaller holes in the bracket. Make sure that the direction of flow points towards the top of the triangle.

Using the M8 Circular Nut with Extension (Item 32) slide it behind the support plate and fasten it using M8 x 20 Hex Bolt (Item 23).

Wire the Fuel pump using the 15A Spade Fuse, Fuse Holder, Relay and switch (Item 18,19, 20 & 21) to desired location in the vehicle.

3.3

Lift the tank into postion while making sure that you guide the pipes through the body as indicated in 3.3. Make sure you can access the pipes from the outside of vehicle on the right hand side.

© COPYRIGHT 2019 FRONT RUNNER VEHICLE OUTFITTERS

4 FIT AND CONNECT THE TANK

4.1

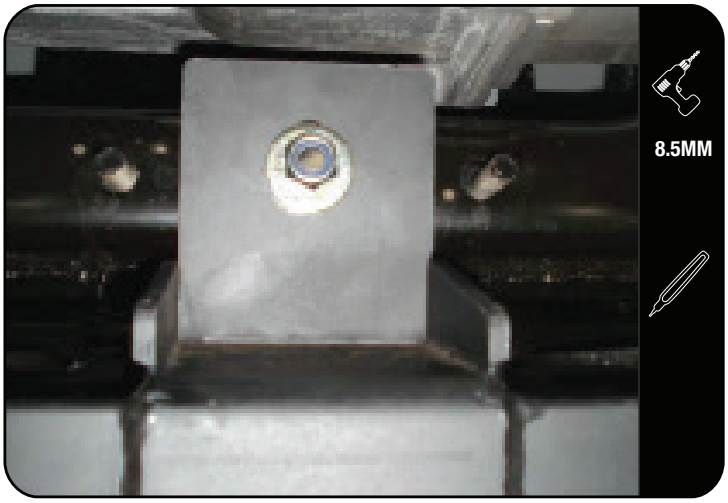

Hand tighten the front tank bracket to the center M8 stud in 3.1 using a M8 Nyloc Nut and M8 Flat Washer (Item 27 & 29). Raise the rear tank brackets so that they sit flush with the chassis. Mark on the brackets where they sit centered with the chassis and drill a hole in each bracket us a 8.5mm drill bit.

4.2

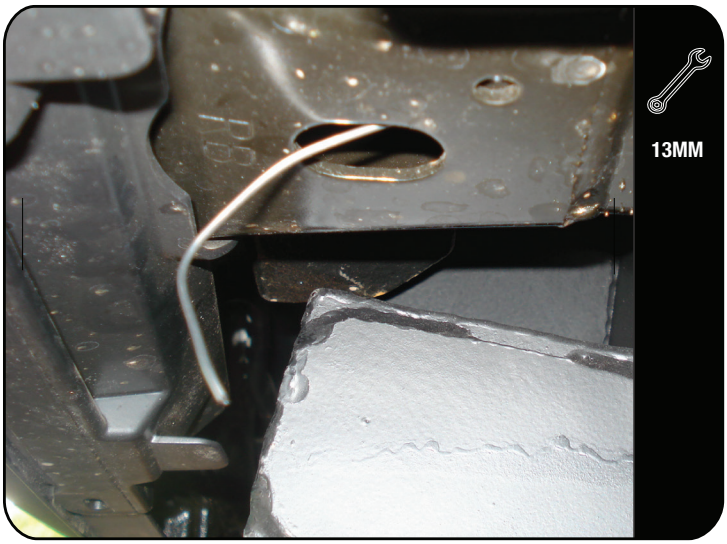

Using the hole at the rear of the chassis, slide two M8 Nuts with extension (Item 31) into the chassis and line the nut up with the hole that has been drilled in 4.1.

Using two M8 x 40 Hex Bolts, two M8 Spring Washers and two M8 Flat Washers (Item 22, 25 & 30) secure the tank to the chassis.

4.3

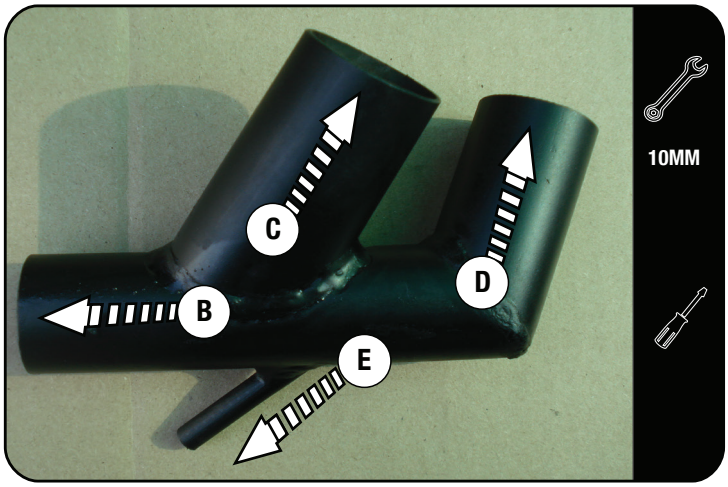

To complete the plumbing you need to connect the Filler Neck (Item 17). Clamp the orginal 32mm fuel tank hose to outlet "D". Clamp the 38mm reinforced hose from 2.8 to outlet "C". Clamp the 8mm Fuel Hose (Item 4) to outlet "E" and the then connect the other end to the fuel pump. Connect and clamp the 8mm hose (Item 7) to the banjo bolt in 2.9 and connect the other side to the inlet of the fuel pump.

Outlet "B" is placed in the filler neck to the orginal filler.

© COPYRIGHT 2019 FRONT RUNNER VEHICLE OUTFITTERS

4 FIT AND CONNECT THE TANK

4.2

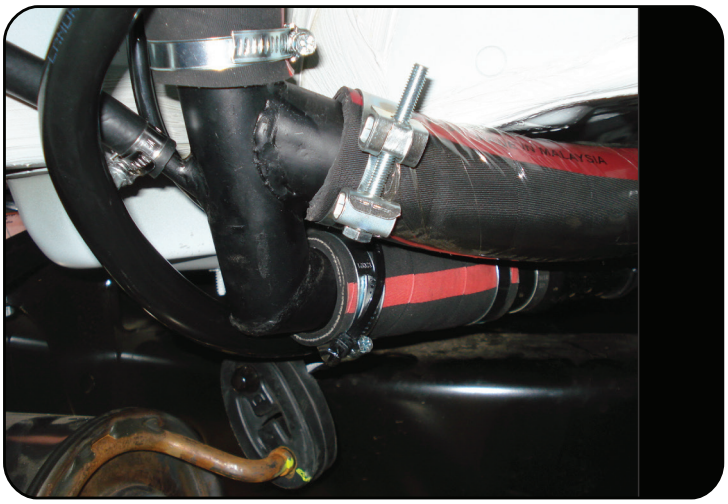

4.2 shows the correct fitment.

4.3

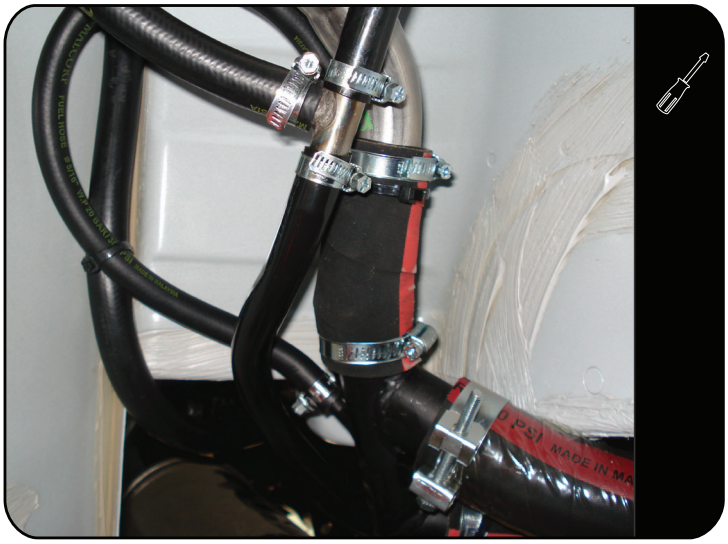

Using the Steel T-piece (Item 15) reconnect it to the breather pipe cut in 2.6. Connect the breather pipe (Item 8) ontop of the tank in 2.8 to the junction of the T-piece.

4.4

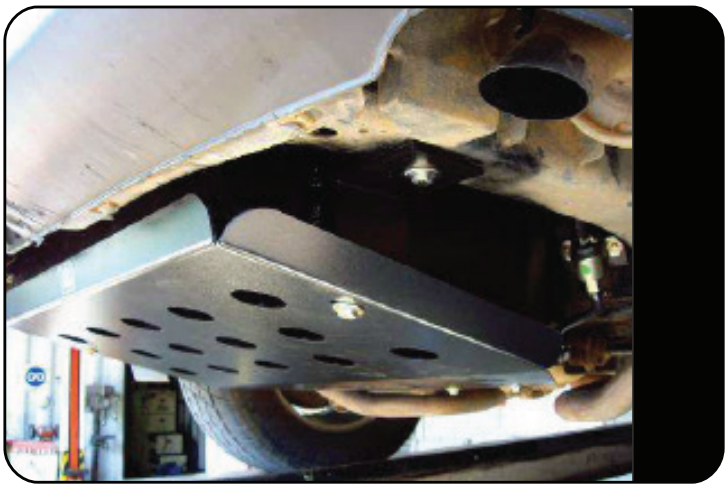

Check all fasteners and ensure they are fully fastened. Refit the wheel arch lining and wheel flair removed in 2.2 and 2.3.

If you fit a tank gaurd use the existing tank mounting brackets and two outer studs on the front tank bracket.

© COPYRIGHT 2019 FRONT RUNNER VEHICLE OUTFITTERS

5 FINISH

Congratulations! You did it. Take a step back and admire your work!

6 INSTALL OTHER VEHICLE AND RACK ACCESSORIES

Now's the time to visit your favorite Front Runner Dealer in person or online.

Be sure to tag us. We love to see our gear in action! #FrontRunnerOutfitters #BornToRoam

Share your adventures on:

© COPYRIGHT 2019 FRONT RUNNER VEHICLE OUTFITTERS

ATTENTION FITMENT CENTER: THIS PAGE MUST BE LEFT IN THE VEHICLE FOR THE CUSTOMER!

IMPORTANT WARNING! ⚠

Do not use the fuel tank as a jacking point as it will cause damage to the tank and tank mountings. For example, do not use an air jack underneath the tank to lift the vehicle.

1 FILLING YOUR AUXILIARY FUEL TANK

1.1 **Filling using the original filler:**

When filling up your vehicle, both the main and auxiliary tank will fill up at the same time. We recommend that the first setting on the fuel station's fuel pump is used, allowing both tanks to fill without any airlocks.

1.2 **Filling using a secondary filler:**

When filling up your vehicle's auxiliary tank, fill as you would normally fill your main tank, using the second filer.

© COPYRIGHT 2019 FRONT RUNNER VEHICLE OUTFITTERS

2 TRANSFERRING FUEL BETWEEN TANKS

1.1

Gravity Fed Tanks:

The majority of the Front Runner tanks are gravity fed. Gravity feed is when your main tank is continuously being fed from your auxiliary tank. You will notice hat your fuel gauge will remain above the three quarter level mark for longer. When your fuel gauge drops below the three quarter level mark, it will be a rough indication that the auxiliary is empty. The fuel gauge will work as normal from that point onwards.

1.2

Pump Transfer Tanks:

To transfer the fuel from the auxiliary tank to the main tank you must switch the pump on at the switch (which is located inside the vehicle). The fuel pump is a 12V low pressure pump and pumps around 2 liters a minute, so ensure that you do not leave the main tank completely empty before you start to pump. We advise that you start pumping fuel when your fuel gauge reaches the quarter level mark. Make sure that you watch your fuel gauge and switch the pump off as soon as the fuel has transferred into your main tank.

When switching the pump on you will hear a soft ticking noise, when the fuel has been completely pumped into the main tank and the auxiliary tank is empty, the pump will make a loud ticking noise. The pump must be switched off as soon as you hear this noise. The loud ticking noise indicates that the pump is running dry witch will damage it if left unattended.

3 TROUBLESHOOTING GUIDE:

Diagnosis	Solution
Pump is not working and the indicator light on the switch is off when the switch is in the "ON" Position.	- Check that the fuse for the pump is not blown - Check wiring.
The indicator light on the switch is on, but the pump is not working.	- Give the fuel pump a few light taps as the diaphragm inside the pump may be sticking as a result of contaminated fuel. If tapping does not solve the problem, further investigation is required and the pump may need to be replaced. - Check wiring.
Fuse keeps on blowing	- Check wiring.

4 FUEL TANK TESTING

4.1

All tanks developed and manufactured at Front Runner are structurally tested during development. Each tank is individually tested for manufacturing tolerances and leaks. The leak test involves the tank being pressurized to 0.4 BAR while being submerged under water for 120 Seconds, where visual inspection is undertaken to check for any leaks

© COPYRIGHT 2019 FRONT RUNNER VEHICLE OUTFITTERS