FRONT RUNNER

CARGO FRIDGE SLIDE 95L TO 100L

ENG

FSLI023

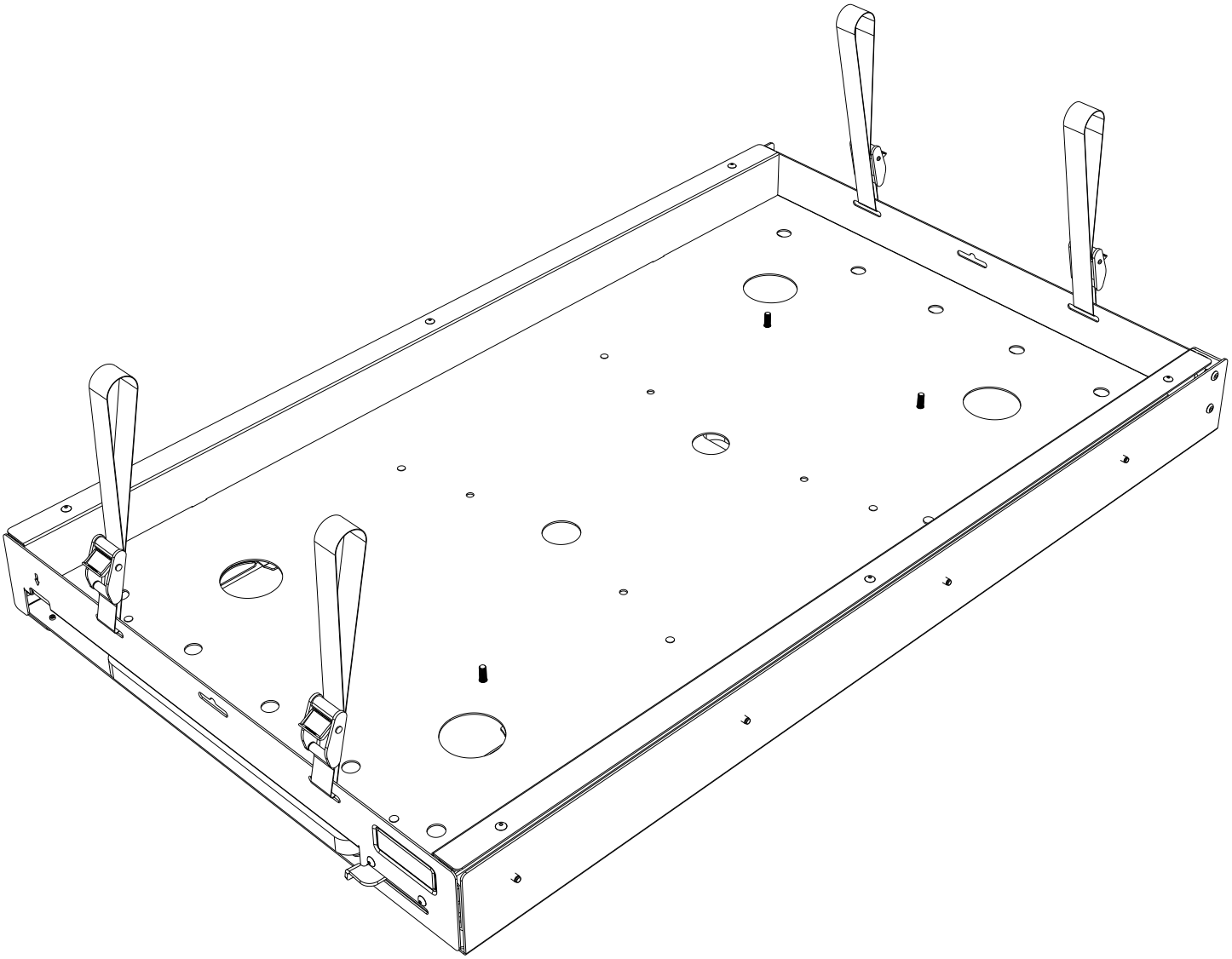

READ ME !

Thank you for purchasing a Front Runner Cargo Fridge Slide 95L - 100L.

Before you start, take a moment to familiarize yourself with the Fitting Instructions and the included components.

Refer to Page 2 for a list of all the components, quantities and tools required.

IMPORTANT WARNING!

IT IS CRITICAL THAT ALL FRONT RUNNER PRODUCTS BE PROPERLY AND SECURELY ASSEMBLED AND ATTACHED TO YOUR VEHICLE. IMPROPER ATTACHMENT COULD RESULT IN AN AUTOMOBILE ACCIDENT, AND COULD CAUSE SERIOUS BODILY INJURY OR DEATH. YOU ARE RESPONSIBLE FOR ASSEMBLING AND SECURING ALL FRONT RUNNER PRODUCTS TO YOUR VEHICLE, CHECKING THE ATTACHMENTS PRIOR TO USE, AND PERIODICALLY INSPECTING THE PRODUCTS FOR ADJUSTMENT, WEAR AND DAMAGE. THEREFORE, YOU MUST READ AND UNDERSTAND ALL OF THE INSTRUCTIONS AND PRECAUTIONS SUPPLIED WITH YOUR FRONT RUNNER PRODUCT PRIOR TO INSTALLATION OR USE. IF YOU DO NOT UNDERSTAND ALL OF THE INSTRUCTIONS AND CAUTIONS, OR IF YOU HAVE NO MECHANICAL EXPERIENCE AND ARE NOT THOROUGHLY FAMILIAR WITH THE INSTALLATION PROCEDURES, YOU SHOULD HAVE THE PRODUCT INSTALLED BY A PROFESSIONAL INSTALLER OR OTHER QUALIFIED PERSONNEL.

NOTE: Front Runner will not be responsible for any damage caused by the failure to install the product according to these instructions.

Please call us if you have any questions about the installation of this product.

© 2025 FRONT RUNNER VEHICLE OUTFITTERS

1 GET ORGANIZED

Mounting Hardware for Wooden Deck or Drawer System

1	1 X	Fridge Slide 95L - 100L
2	4 X	M6 x 16 Button Head
3	4 X	Strap
4	12 X	M6 x 19 x 1 Flat Washer
5	6 X	M6 x 25 Hex Head Bolt
6	6 X	M6 Wood Insert

TOOLS NEEDED

Mounting Hardware for Flat Surface Using Rivnuts

1	1 X	Fridge Slide 95L - 100L
2	4 X	M6 x 16 Button Head
3	4 X	Strap
4	12 X	M6 x 19 x 1 Flat Washer
5	6 X	M6 x 25 Hex Head Bolt
7	6 X	M6 Rivnut

TOOLS NEEDED

Mounting Hardware for Flat Surface Using Nuts & Bolts

1	1 X	Fridge Slide 95L - 100L
2	4 X	M6 x 16 Button Head
3	4 X	Strap
4	12 X	M6 x 19 x 1 Flat Washer
5	6 X	M6 x 25 Hex Head Bolt
8	6 X	M6 Nyloc Nut

TOOLS NEEDED

FIGURE 1.1

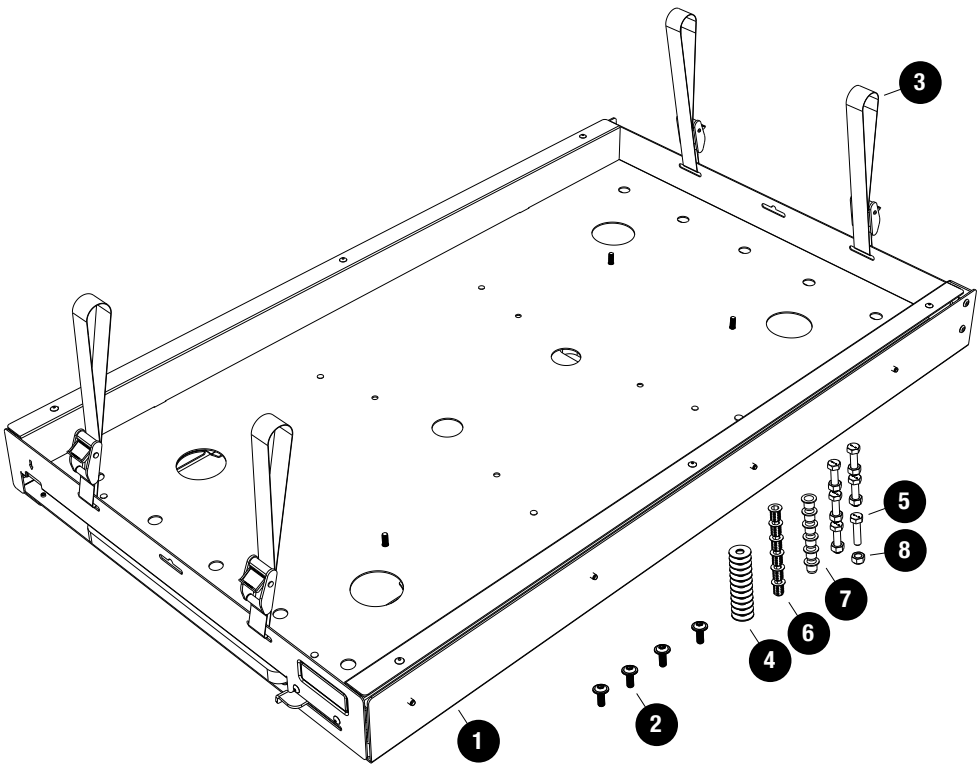

 © 2025 FRONT RUNNER VEHICLE OUTFITTERS

2 FIT AND SECURE - WOODEN DECK OR DRAWER SYSTEM

2.1

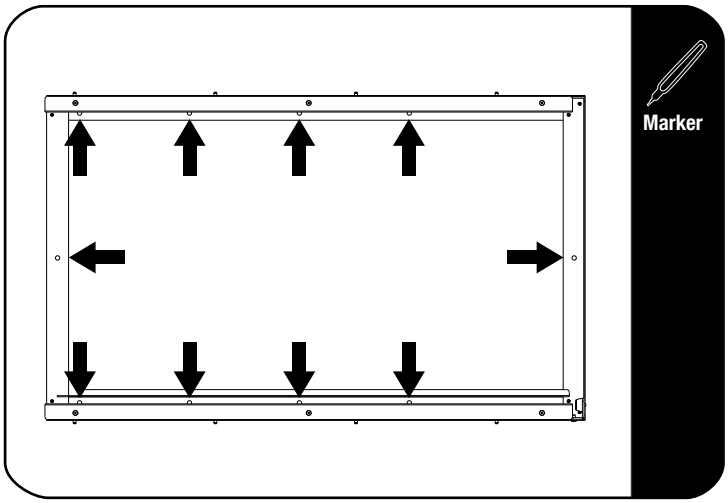

Place the Fridge Slide (Item 1) on the suitable surface, open the slide and mark the positions as shown as indicated by the arrows (at least 6 fixing points recommended).

2.2

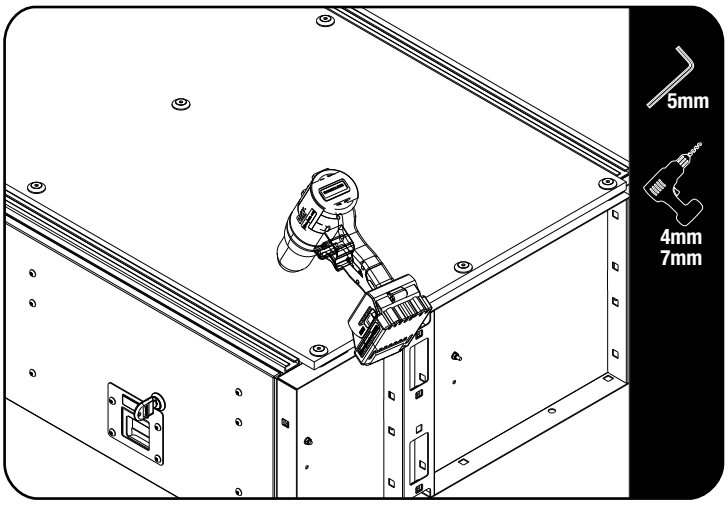

Remove the Fridge Slide and Drill a 7mm hole through the wood on each of your markings. Loosen and remove the deck.

Turn the deck upside down and screw the Wood Inserts (Item 6) into each of the holes drilled in step 2.1.

2.3

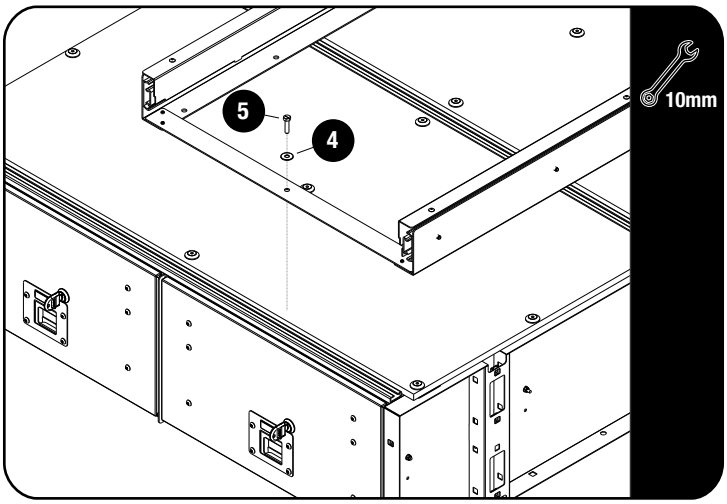

Secure the Deck back onto the drawer system. Place the fridge Slide (Item 1) back into position and secure using M6 x 20 Hex Bolts and M6 x 19 x 1 Flat Washers (Items 4 & 5).

© 2025 FRONT RUNNER VEHICLE OUTFITTERS

3 FIT AND SECURE - FLAT SURFACE USING RIVNUTS

3.1

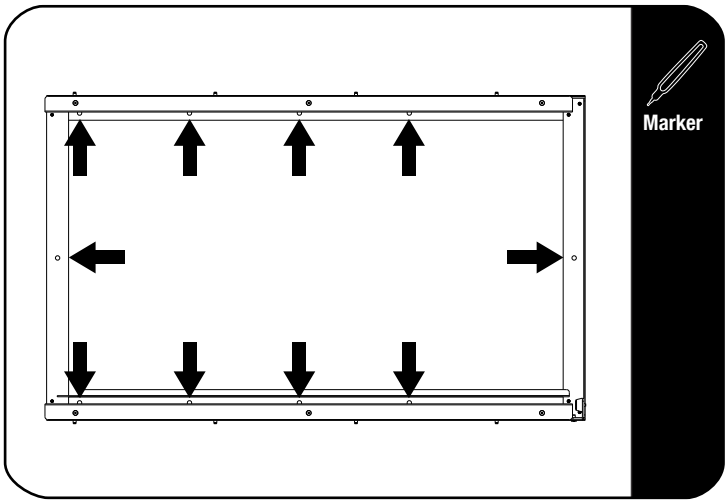

Place the Fridge Slide (Item 1) on the suitable surface, open the slide and mark the positions as shown as indicated by the arrows (at least 6 fixing points recommended).

3.2

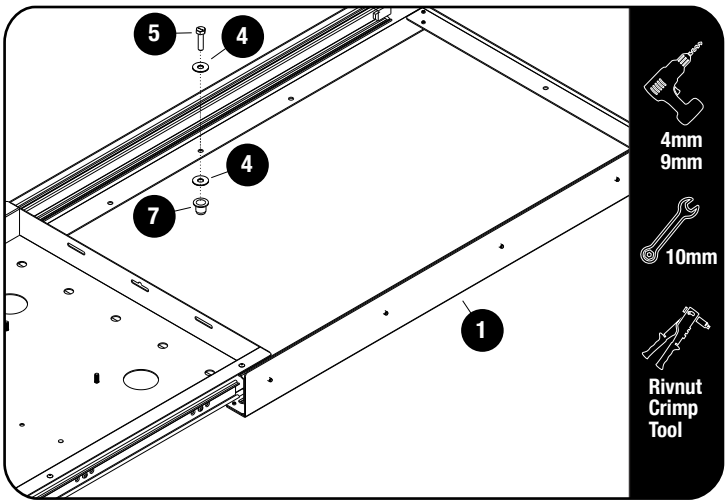

Keeping the markings in mind, look below the vehicle for any obstructions.

Remove the Fridge Slide (Item 1) and drill a 4mm pilot hole on each of the markings, open the holes to 9mm.

Insert and Crimp a M6 Rivnut (Item 7) into each hole.

Secure the Fridge Slide (Item 1) to a flat surface using M6 x 25 Hex Head Bolts and M6 x 19 x 1 Flat Washers (Items 4 & 5).

3.3

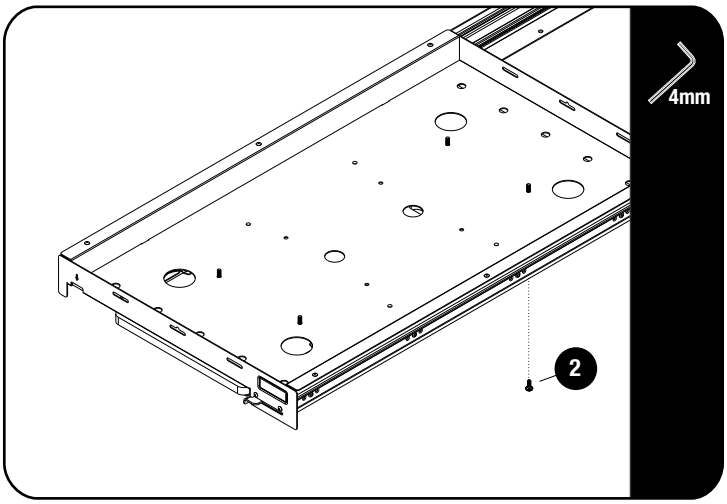

The M6 x 16 Button Head Bolts (Item 2), supplied are used to secure a Dometic Fridge.

© 2025 FRONT RUNNER VEHICLE OUTFITTERS

4 FIT AND SECURE - FLAT SURFACE USING NUTS AND BOLTS

4.1

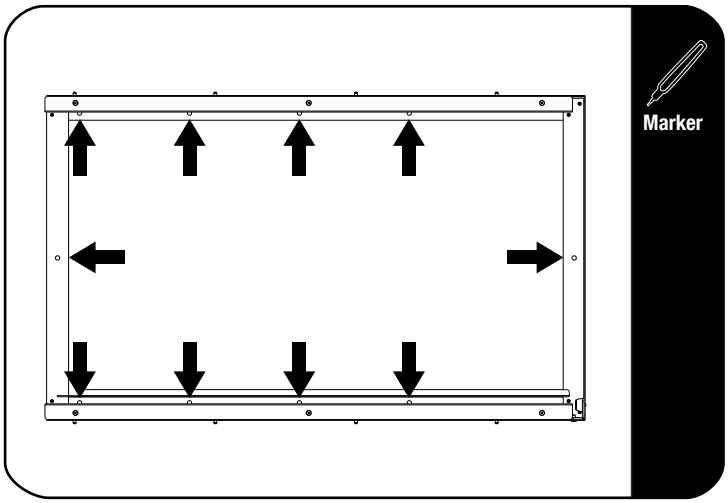

Place the Fridge Slide (Item 1) on the suitable surface, open the slide and mark the positions as shown as indicated by the arrows (at least 6 fixing points recommended).

4.2

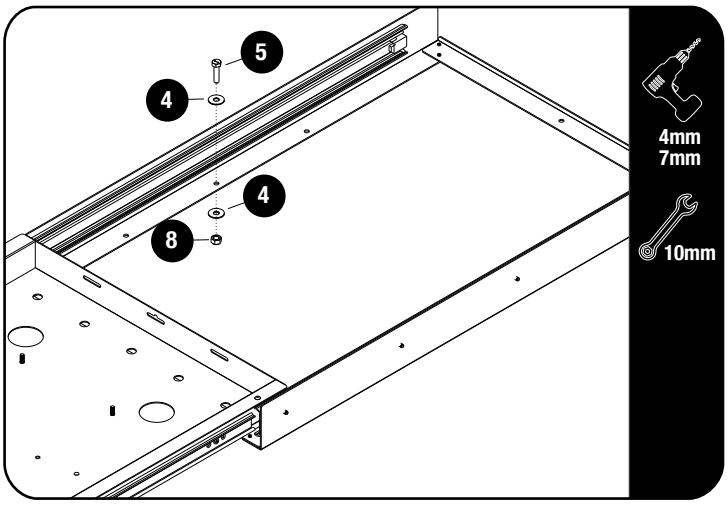

Keeping the markings in mind, look below the vehicle for any obstructions.

Remove the Fridge Slide (Item 1) and drill a 4mm pilot hole on each of the markings, open the holes to 7mm.

Secure the Fridge Slide (Item 1) to a flat surface using M6 x 25 Hex Head Bolts, M6 x 19 x 1 Flat Washers & M6 Nyloc Nuts (Items 4, 5 & 8).

4.3

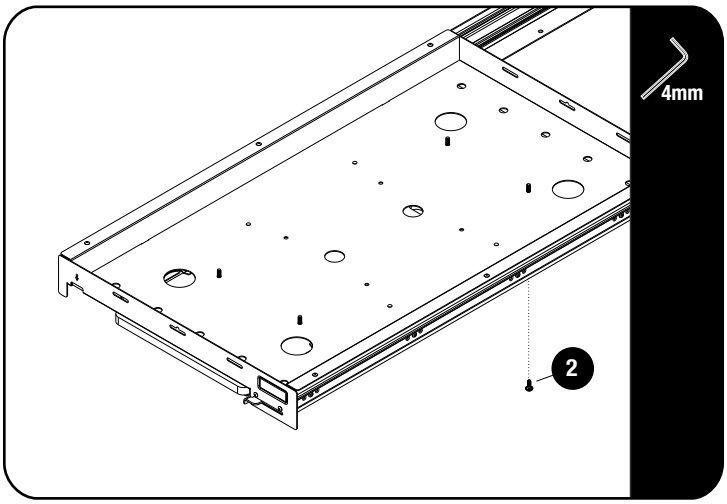

The M6 x 16 Button Head Bolts (Item 2), supplied are used to secure a Dometic Fridge.

© 2025 FRONT RUNNER VEHICLE OUTFITTERS

4 CARE

Thoroughly clean the board with mild detergent and warm water. Avoid using harsh chemicals, as these can dry out the bamboo. Apply food grade mineral oil/beeswax to the table surface and edges, at regular intervals to extend the life of your bamboo board.

5 FINISH

Congratulations! You did it. Take a step back and admire your work!

6 INSTALL OTHER VEHICLE AND RACK ACCESSORIES

Now's the time to visit your favorite Front Runner Dealer in person or online.

Be sure to tag us. We love to see our gear in action! #FrontRunnerOutfitters #BornToRoam

Share your adventures on:

© 2025 FRONT RUNNER VEHICLE OUTFITTERS