National Luna

PORTABLE REFRIGERATOR

# OWNER'S HANDBOOK

THE NATIONAL LUNA RANGE OF PRODUCTS HAVE BEEN DESIGNED AND MANUFACTURED IN SOUTH AFRICA SINCE 1989.

EVERY PRODUCT SOLD IS OF THE HIGHEST POSSIBLE QUALITY, MANUFACTURED WITH WORLD-CLASS TECHNOLOGY, MARKETED & SERVICED BY A KNOWLEDGEABLE & DEDICATED TEAM, LOCALLY & INTERNATIONALLY

This manual / handbook is a combined publication,
for models manufactured from 2009.
Identify your model and follow the relevant
colour coded pages for best use.

**National Luna Portable Refrigeration Models:**

National Luna Classic Range
40-65-80-125 Litre →

Double Door 74/95 Litre
Twin Compartment 90 Litre →

Weekender 50 LitreTwin
Weekender 52 Litre →

Relevant information, common to all models

Please complete the tear-out return card to register your warranty

National Luna fridges have been tested to international safety specifications

SANS 60335-2-24:2003
SANS 60335-1:2007

IEC 60335-2-24:2002
IEC 60335-1:2006

# Index


| | Page |
|---|---|
| Introduction | 4 |
| Installation Guidelines | 5 |
| Connecting Power | 6 |
| Wiring Guidelines | 6 |
| Temperature Settings | 7 |
| Celsius / Fahrenheit Conversion Chart | 8 |
| Speed Control | 9 |
| Battery Protection | 10 |
| National Luna Classic Range | 12 |
| National Luna Double Door and Twin Range | 15 |
| National Luna Weekender Range | 19 |
| Troubleshooting | 26 |
| National Luna Warranty | 27 |

# Introduction

**Congratulations on the purchase of your National Luna portable fridge / freezer.**

The National Luna range of portable fridges and freezers are high-performance, high efficiency refrigerators ideal for harsh conditions and applications that are limited to battery power such as off-road vehicles, caravans and solar installations.

The versatility of each of the National Luna models allows the use of a wide range of AC supply voltage (85V DC - 265V AC) as well as 12-volt or 24-volt battery power (9.6V AC - 31.5V DC).

The use of a custom-designed digital thermostat and smart control circuitry ensures temperature stability and low power consumption.

All refrigerator models are built using high quality materials, unique assembly techniques and strict testing procedures to ensure the highest level of quality and performance.

# Precautions

When the refrigerator is used in an automotive application, ensure that it is secured to prevent accidental movement. The carry handles can be used with straps or tie-downs if necessary.

- A base mounting plate is optional and recommended for most applications.
- Allow a 50mm gap around the refrigerator compressor area for ventilation.
- Do not block or cover the ventilation holes.
- Ensure the correct type of cable and connectors are used for installation.
- Ensure that any power leads connected to the refrigerator will not be pulled or damaged by any movement of the fridge - especially where slides or drawers are used.
- Do not use a power lead that is damaged.
- Do not connect the refrigerator to a power source that does not comply with the input power specifications. (Displayed on the fridge's rear panel)
- When storing the fridge, ensure that the lid is propped open to allow for aeration. Disconnect the appliance from an electrical source. (Note: When the fridge is switched off, the interior light will still function if the unit is connected to a power source).

## Installation guidelines

When installing the refrigerator into a vehicle for the first time, ensure that the electrical connections to the vehicle's battery are secure and the specified wiring is used.
(See wiring guidelines on page 6)

The fridge is supplied with a pre-made cable for use with a 12 / 24-volt DC supply.
This cable is terminated with a high-quality male plug for connection into your vehicle.

1. Install the supplied female socket into your vehicle in a convenient location.
2. Use a suitable cable to connect the socket to the vehicle's battery.
   A cable thickness of $4mm^2$ or greater is recommended.

**When installing electrical outlets in your vehicle, do not rely on the vehicle's body for an electrical earth.**

## Fitting an in-line fuse

Although the fridge has a built-in fuse, it is recommended to install an additional fuse on the positive wire as close to the battery as possible. This will protect against short-circuits that may occur along the length of the cable. Ensure that all connections are properly crimped and insulated.

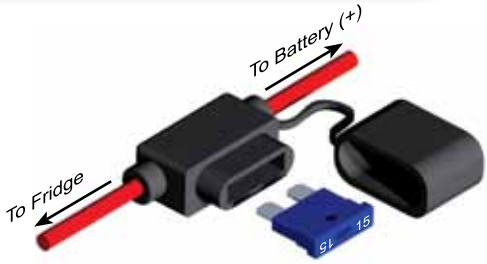


An automotive fuse with a rating of 15A is recommended

If you choose to change the attached plug on the DC cable for a different type, first ensure that the power has been disconnected before cutting it.

Split and strip the wires as required for the new plug. Take care to ensure that the correct polarity is used on the plug and crimp the connections where possible.

## Connecting power

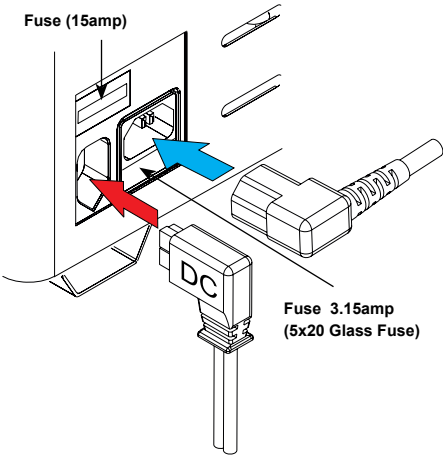


All National Luna Portable refrigerators can accept a DC voltage ranging from 9.6V to 31.5V, as well as an AC voltage range from 85V to 265V.

Both power inputs are fuse protected :
- 3.15A Time-lag fuse for AC input.
- 15A automotive blade fuse for DC input.

An AC and DC source can be connected to the refrigerator simultaneously. Under these conditions, the AC supply will be chosen as the primary power source.

If the AC supply is interrupted, the DC supply will be automatically selected and operation will continue normally. (After a 1 minute delay)

## Suggested Wiring Specifications

One of the most problematic issues with installing a 12-volt refrigeration system is incorrect wiring. Most users do not understand the importance of maintaining battery voltage over the distance from the battery to the installed fridge.

While most car cigarette lighter sockets appear to be adequate, in practise a large voltage drop occurs between the socket and the car battery. This may result in the fridge shutting down as a result of a low-voltage condition.

It is recommended the following table be used as a guide to establish what cable thickness is to be used depending on the distance from the car battery to the fridge. As a rule of thumb one should use a 1.0 $mm^2$ multi-strand copper wire per meter of distance from the battery.

| Cable Size | Max Length between battery & fridge | |
|---|---|---|
| Cross Section $mm^2$ | 12 Volt Operation Meters | 24 Volt Operation Meters |
| 4 | 4 | 8 |
| 6 | 6 | 12 |
| 10 | 10 | 20 |

**Note:** Two wires (positive and negative) must be connected from the battery to the fridge / plug point.

# Dynamics of Temperature Settings

## Danfoss BD35F compressor

The compressor is controlled by the digital thermostat setting.
The Danfoss BD35F compressor is used on all of the National Luna fridge/freezer product range. Developed in Germany, it has a unique Multi - Speed (2,000 - 3,500 rpm) capability which makes it ideal for use in all mobile applications up to an angle of 35 degrees. It can function efficiently in extreme conditions where it is not uncommon to have ambient temperatures above 40ºC.

## Inner Bin / Cooling Compartment

To control temperature, the thermostat sensor must be placed in a position in order to take a temperature reading.

For practical purposes National Luna has elected to place this temperature sensor on the metal surface forming the interior bin of the fridge/freezer. Thus the switching on and off of the compressor will be controlled by the bin surface area temperature.

The inner volume of the cooling bin (i.e. core/centre temperature) will take time to “pull down” to equalise the bin temperature. (In practise it is common that the set temperature will be within 3ºC of the core temperature).

Ambient temperatures surrounding the fridge must also be taken into consideration. Very high outside temperatures will play a major role in the running time of the fridge. (e.g. The fridge will run longer to maintain or reach the target temperature set).

When setting temperatures below -12ºC the refrigeration system will have a larger temperature range between switching on and off

## Setting the Temperature

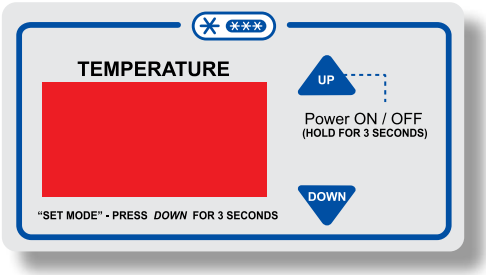


The digital thermostat fitted to the National Luna Portable refrigerator allows accurate setting of the desired cooling temperatures.

With the single compartment refrigerators, temperatures can be selected between +20°C and -30°C in 1°C increments.

When powering up the fridge the first time, the temperature inside the fridge will be reflected on the display. (NOTE: the previously set temperature will be in memory)
To select the new cooling temperature, press and hold the DOWN button until the display starts to flash. (The previous set temperature will be displayed).

Press UP or DOWN to raise or lower the desired temperature. The thermostat will accept the new setting and exit the setting mode 10 seconds after the last button was pressed. (It will now remember the new set temperature).

The temperature display will reflect the inner bin temperature prior to the new setting. Provided the new setting is colder, the compressor will then switch on and cool the fridge further to the set point. (During this time the run indicator light will be displayed).

## Temperature Guidelines

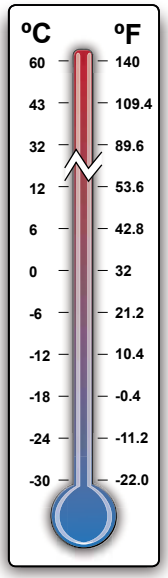


The following table is a guideline to setting the correct temperature range for different foodstuffs.

| Recommended choice of temperatures | |
|---|---|
| Fresh fruits & vegetables<br>Dairy products<br>Smoked / prepared meats | 3°C to 6°C |
| Cold beverages | 0°C to 4°C |
| Short-term frozen meats | -6°C to -11°C |
| Frozen meats and fish<br>Ice cream / frozen desserts | -18°C |

# Introduction to Smart Compressor Control

National Luna developed a Smart Compressor Control ( advanced automatic speed control) function which has been fitted as standard to all current models.

- **Logic 1 (Setting the bin temperature in a range of +20ºC to -11ºC).**

The compressor will operate at 3 speeds : low 2,000 rpm, medium 2,750 rpm and high 3,500 rpm. On initial start-up the fridge will automatically run at full speed to bring the inner bin temperature down as fast as possible. It will then step down to medium speed to reach the set temperature point where the fridge will then switch off. Temperature will then be maintained at low speed.

This logic makes the fridge operate and maintain the desired bin temperature under all ambient temperature conditions optimising performance and efficiency.

Should the temperature of the fridge contents change, such as when fresh foodstuffs are added, the fridge will automatically speed up to cool the new contents.

- **Logic 2 Deep Freezing (Setting temperature below -11ºC).**

When temperatures are set below -11ºC, the Smart Compressor Control will operate at high speed (initial start-up) to bring temperature down as fast as possible to the desired set point. Thereafter temperature will be maintained at medium speed.

# Speed Control

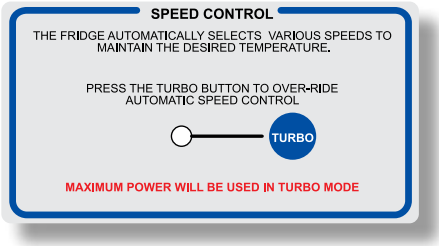


National Luna refrigerators have an advanced speed control which will vary the speed of the compressor in order to conserve power and optimise performance.

For situations where maximum cooling power is required, press and hold the “Turbo” button until the indicator is illuminated. TURBO

This will bypass automatic control and force high speed operation.

**Selecting the “Turbo” mode will over-ride the Smart Control function and the unit will run at maximum speed**

## Battery Voltage vs Capacity

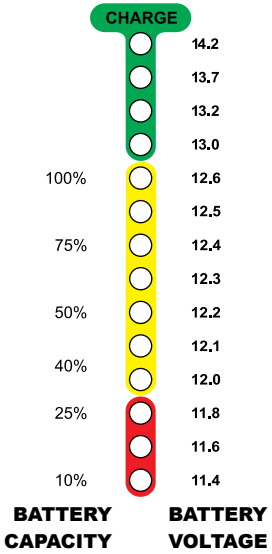


- Voltage of a battery can be an indication of its “state-of-charge”.
- The voltage-capacity relationship is most accurate when the fridge is not running and the battery temperature is at 25°C.
- By measuring the voltage, we can estimate the amount of energy remaining in the battery.
- Changes in temperature, battery age and general battery health can influence this relationship and therefore result in inaccurate capacity measurement.
- Normal battery operation takes place between 12.0 and 12.6 volts.
- Depending on the manufacturer’s specifications a normal car’s alternator charges between 13.7 and 14.2 volts.
- A battery should not be discharged below 11.8 volts as a general rule. A “deep-discharged” battery should be recharged as soon as possible to prevent permanent damage.

## Danfoss Low Voltage Battery Protection

The Danfoss electronic control unit will cut-out at the low / medium / high selected setting.
Once the compressor has cut-out, it will not restart (cut-in) until the voltage rises.
The table below reflects the set points.

| | 12 VOLT | | 24 VOLT | |
|---|---|---|---|---|
| **Battery Protection** | **Cut-out** | **Cut-in** | **Cut-out** | **Cut-in** |
| LOW | 9.6 | 10.9 | | |
| MED | 10.4 | 11.7 | 22.8 | 24.2 |
| HIGH | 11.3 | 12.5 | 24.6 | 26.0 |

**Note: these values are measured at the Danfoss control unit input. It is important to note that poor / thin wiring and bad connections to the battery can cause a large voltage drop. When this occurs the fridge switches off and will re-start again on a repeat cycle “hunting”.**

**NOTE: When connecting the fridge for the first time, it will look at the cut-in voltage. If the battery protection is set on “High” the initial cut in voltage will be 12.5. If the battery is not fully charged the fridge will not start. Simply select low to start. When selecting “Low” the fridge will operate within a voltage supply of 9.6-31.5volts.**

**When using the unit in a 24-volt application do not select battery protection “LOW” as this will completely drain the battery bank. (Causing permanent damage to the batteries)**

## Battery Protection Settings

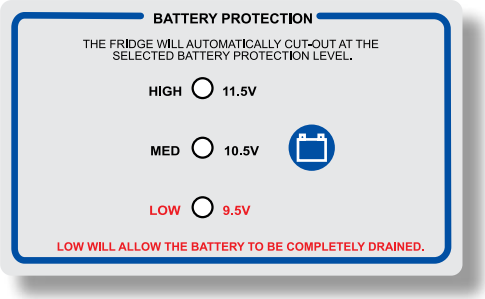


The refrigerator is equipped with a multi-level battery protection circuit.
The user has the choice of three voltage levels at which the compressor will shut down to protect against excessive battery discharge. (See page 10)
To change the protection level, press and hold the button until the preferred level is reached.

When powered by an AC source, the battery protection level can be changed but will only affect operation when the DC source is used.

Selecting the “Low” cut-out setting can cause excessive discharge resulting in damage to the battery.

## Indicator Lights

Status indicators will identify the current operation of the refrigerator.

**RUN -** This indicator will be illuminated whenever the fridge compressor is running and the compartment is being cooled.

**FAULT ID -** This indicator is used to identify fault conditions that may occur with the refrigerator such as low power supply.
This indicator will flash a pre-determined number of times every 4-seconds when a particular fault occurs (see table below). Also refer to page 26.

| # of flashes | Fault description |
|---|---|
| 1 | Low voltage. This is shown when the DC supply voltage is low. The battery could be flat, wiring losses are too high or there is a poor connection to the power source. |
| 2 | Fan over-current cut-out. There is a problem with the ventilation fan. It is possible that the ventilation fan is obstructed, blocked or damaged. |
| 3 | Motor start error. The compressor has not started successfully. This can happen in extreme environments where the refrigerator is heavily loaded and temperature is very high. |
| 4 | Minimum speed error. The motor cannot maintain a minimum speed of 1900 rpm. This can be the result of an internal electronics failure. |
| 5 | Thermal cut-out. The electronic circuitry has over-heated. This happens in very hot environments. This can occur when the fridge is over-loaded with warm contents and the ambient temperature is high. The electronics will re-set when the temperature has dropped. |

## Introduction

Developed for performance at high ambient temperatures, minimum power consumption and high operating efficiency, these single compartment fridges are recognised as the most powerful in the world.

Low power consumption is achieved using 60mm high-density insulation and a very compact design.

With the aid of an integrated electronic thermostat these units can be accurately set as a fridge or as a freezer.

## Getting to know your portable fridge

**Single door (40L - 65L - 80L - 125L)**

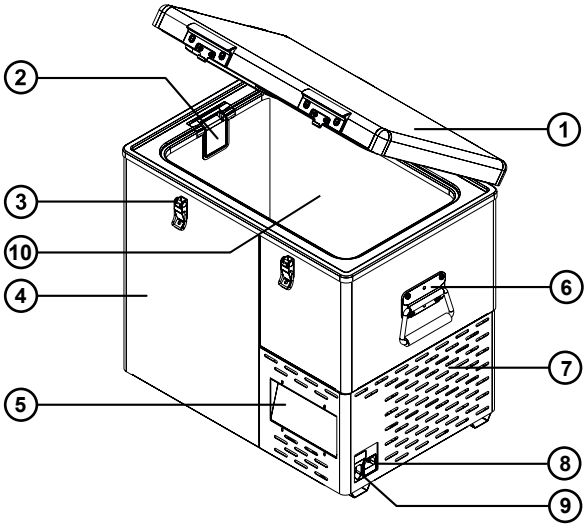


1. Lid
2. Interior light (24V 10W)
3. Lid locking latches
4. Cabinet exterior
5. Control panel
6. Carry handles
7. Compressor area
8. AC input with fuse (3.15A)
9. DC input with fuse (15A)
10. Cooling Bin (Evaporator)

# Control Panel

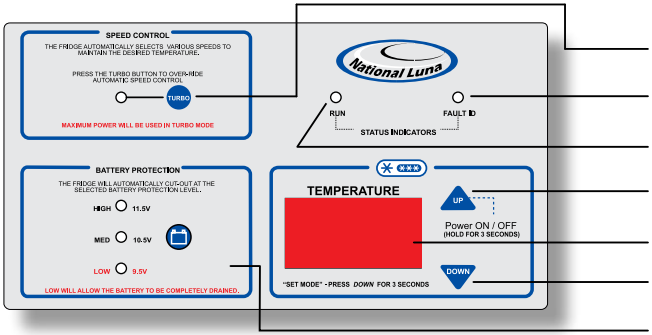


Automatic speed control with TURBO over-ride

Fault identifier light

Run status light

Power ON/OFF and temperature UP control

Temperature display

SET mode and temperature DOWN control

Battery protection control

# On / Off control

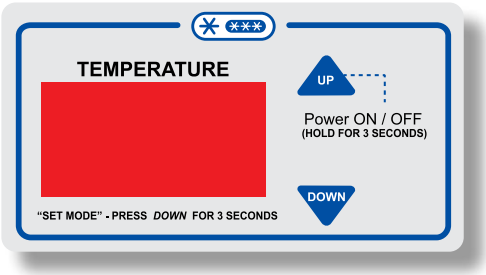


The refrigerator can be turned **ON** and **OFF** via the control panel.

Press and hold the UP button for 3 seconds to turn the fridge **ON** or **OFF**.

If power to the refrigerator is interrupted, it will default to **ON** automatically.
Note: When the fridge is switched off, the interior light will still function if the unit is connected to a power source.

# Battery Protection

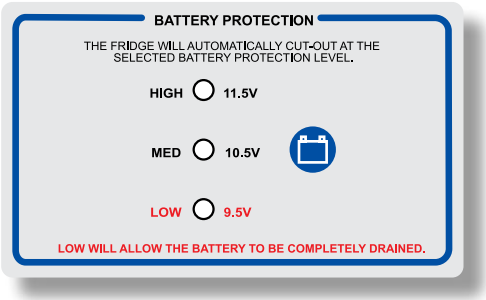


The refrigerator is equipped with a multi-level battery protection circuit.
The user has the choice of three voltage levels at which the compressor will shut down to protect against excessive battery discharge.

To change the protection level, press and hold the button until the preferred level is reached.

When powered by an AC source, the battery protection level can be changed but will only affect operation when the DC source is used. (Refer to page 10 and 11).

## Setting the Temperature

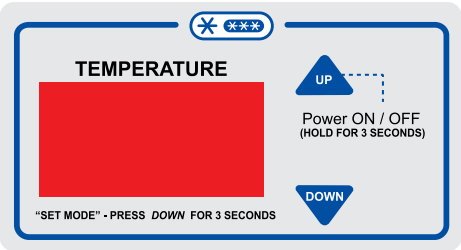


The digital thermostat fitted to the National Luna Portable refrigerator allows accurate setting of the desired cooling temperatures.

With the single compartment refrigerators, temperatures can be selected between +20°C and -30°C in 1°C increments.

When powering up the fridge, the temperature inside the fridge will be reflected on the display. (NOTE: the previously set temperature will be in memory)
To select the new cooling temperature, press and hold the DOWN button until the display starts to flash. (The previous set temperature will be displayed).

Press UP or DOWN to raise or lower the desired temperature. The thermostat will accept the new setting and exit the setting mode 10 seconds after the last button was pressed. (It will now remember the new set temperature).

The temperature display will reflect the inner bin temperature prior to the new setting. If the new setting is colder, the compressor will then switch on and cool the fridge further to the set point.
(During this time the run indicator light will be displayed).

## Speed Control

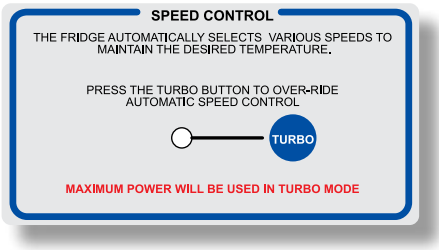


National Luna refrigerators have an advanced speed control which will vary the speed of the compressor in order to conserve power and optimise performance.

For situations where maximum cooling power is required, press and hold the "Turbo" button until the indicator is illuminated. TURBO

This will bypass automatic control and force high speed operation. (Refer to page 9)

**Using the TURBO function can increase power consumption**

## Introduction

The Double door and Twin fridges in this range have only one compressor but due to National Luna's unique Dual Control technology, the fridge and freezer compartments can be set independently. This is like having two fridges in one.

The Double Door range has two lids, one for each compartment.

## Double Door Range (74/95 L)

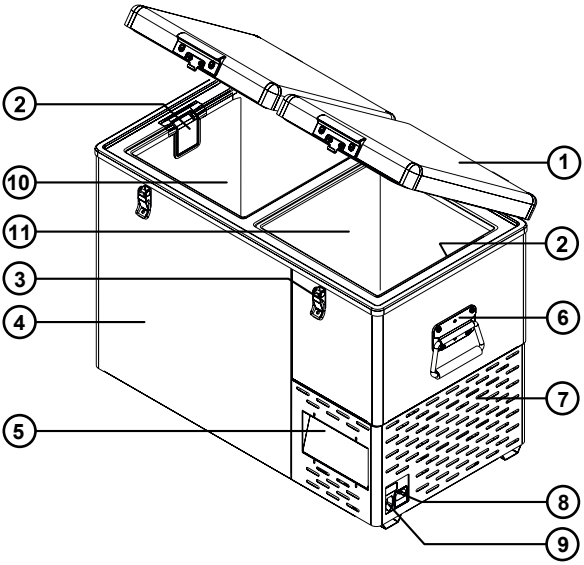


1. Lid
2. Interior light x 2 - (24V 5W)
3. Lid locking latches
4. Cabinet exterior
5. Control panel
6. Carry handles
7. Compressor area
8. AC input with fuse (3.15A)
9. DC input with fuse (15A)
10. L/H Cooling Bin - Freezer
11. R/H Cooling Bin - Fridge

## 90 Litre Twin

The Twin has one lid covering both compartments. The freezer compartment has a separate internal lid. This prevents cold air escaping from the freezer when the main lid is opened, adding to the efficiency and ensuring stable temperatures within.

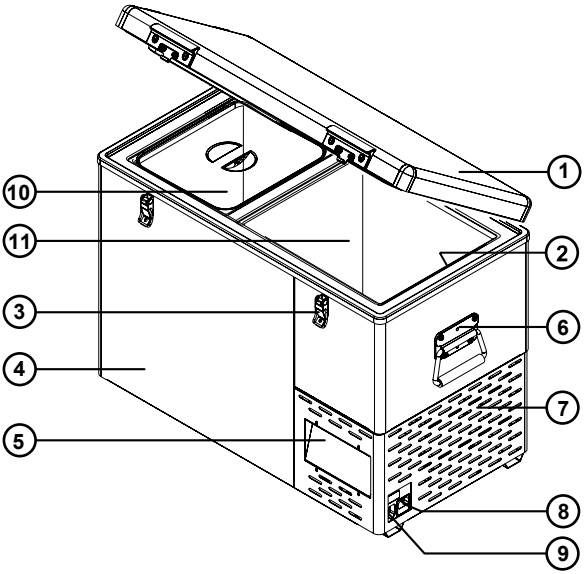


1. Lid
2. Interior light - (24V 5W)
3. Lid locking latches
4. Cabinet exterior
5. Control panel
6. Carry handles
7. Compressor area
8. AC input with fuse (3.15A)
9. DC input with fuse (15A)
10. L/H Cooling Bin - Freezer
11. R/H Cooling Bin - Fridge

## Control Panel

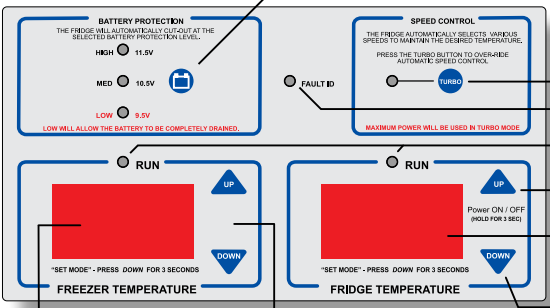


Battery protection control

Automatic speed control with TURBO over-ride

Fault identifier light

Individual run status lights

Power ON/OFF and fridge temperature UP control

Fridge temperature display

Fridge SET mode and temperature DOWN control

Freezer SET mode and temperature UP / DOWN

Freezer temperature display

## On / Off control

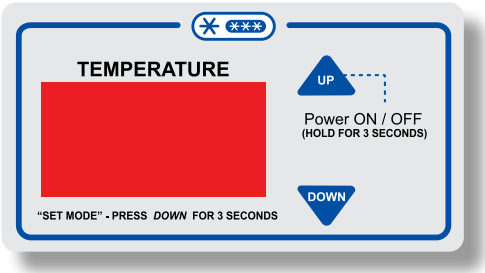


The refrigerator can be turned **ON** and **OFF** via the control panel.

Press and hold the UP button for 3 seconds to turn the fridge **ON** or **OFF**.

If power to the refrigerator is interrupted, it will default to **ON** automatically.

Note: When the fridge is switched off, the interior light will still function if the unit is connected to a power source.

## Battery Protection

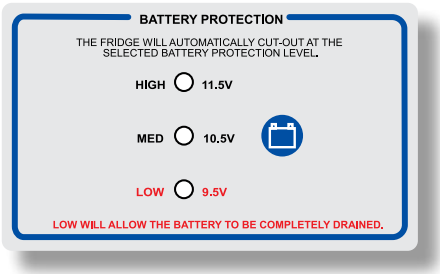


The user has the choice of three voltage levels at which the compressor will shut down to protect against excessive battery discharge.

To change the protection level, press and hold the button until the preferred level is reached.

(Refer to page 10 and 11).

## Speed Control

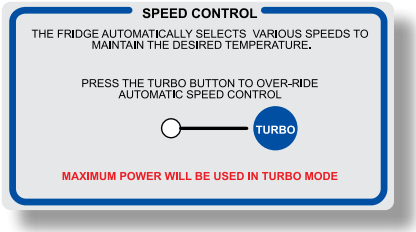


National Luna refrigerators have an advanced speed control which will vary the speed of the compressor in order to conserve power and optimise performance.
For situations where maximum cooling power is required, press and hold the “Turbo” button until the indicator is illuminated.
This will bypass automatic control and force high speed operation. (Refer to page 9)

# Setting the Temperature

**NB - Set one thermostat at a time**

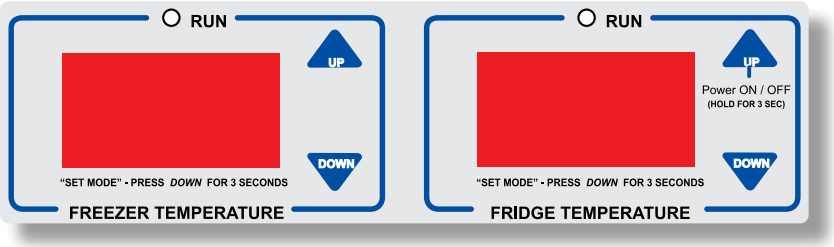


**74Lt / 90Lt / 95Lt Refrigerators have dual thermostats allowing individual temperatures to be selected for each of the cooling bins.**

The "FREEZER" bin has a temperature range between +20°C and -24°C.
The "FRIDGE" bin has a temperature range between +20°C and -12°C.

It is important that the freezer thermostat should be set at the same or colder temperature than the fridge thermostat. This will ensure temperatures are accurately maintained and the refrigerator operates efficiently.

To select the cooling temperature, press and hold the DOWN button until the display starts to flash.

Press UP or DOWN to raise or lower the desired temperature. The thermostat will accept the new setting and exit the setting mode 10 seconds after the last button was pressed.
The same procedure is used on both thermostat controls.
(NOTE: You can only set one thermostat at a time).

**The dual control will first operate to cool the R/H fridge bin before switching to the L/H freezer bin.**

The setting of the L/H bin as a fridge, and the R/H bin as a freezer **is not an option.** The reason for this is that in order to achieve maximum efficiency (i.e. the lowest average battery power consumption), the gas-flows within the unit are intentionally biased to flow from the R/H bin to the L/H bin. Thus the freezing gas could flow from the R/H bin and freeze the contents of the L/H bin.

| Recommended Temperature Settings | | |
|---|---|---|
| | L/H Freezer Bin | R/H Fridge Bin |
| Fridge / Freezer | 6 | 6 |
| Freezer / Fridge | - 6 | 2 |
| Freezer / Freezer | -12 | - 6 |
| Deep Freeze / Freezer | -18 | -12 |

# Weekender 50 Lt TWIN
# Weekender 52 Lt SINGLE

## Introduction

The National Luna Weekender is a high-performance, low-power portable refrigerator designed primarily for use in mobile applications.

By reducing the insulation to 42mm thickness, National Luna offers a lightweight fridge/freezer to meet the demand for maximum fridge capacity where space is a problem.
(Average Power consumption of these fridges would be slightly higher than the 60mm insulation range).

## 50 Litre Twin

The Weekender 50 Twin is split into a 40-litre fridge compartment and a 10-litre freezer compartment. Under normal operating conditions, the larger compartment is used as a fridge and the smaller compartment will attain sub-zero temperatures.

The freezer bin of the Weekender 50-Twin has a separate internal lid. This prevents cold air escaping from the freezer when the main lid is opened, adding to the efficiency and ensuring stable temperatures within.

## Weekender 50L Twin

1. Lid
2. Interior light (24V 10W)
3. Lid locking latches
4. Cabinet exterior
5. Control panel
6. Carry handles
7. Compressor area
8. AC input with fuse (3.15A)
9. DC input with fuse (15A)
10. Fridge Bin (40 Lt) Evaporator
11. Freezer bin (10 Lt) with inner lid
12. Alternative lid handle position
13. Alternative lid latch position
14. Alternative lid hinge positions

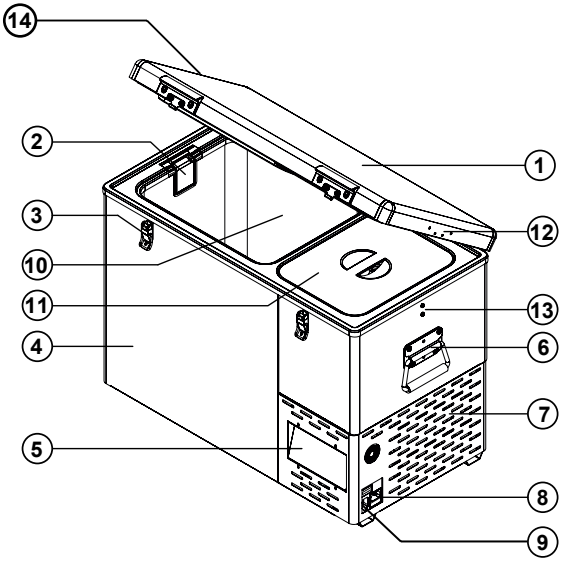

## 52 Litre Single Bin

This model has been designed to operate as a fridge or freezer and the bin temperature can be set between +20°C and -30°C.

## Weekender 52L

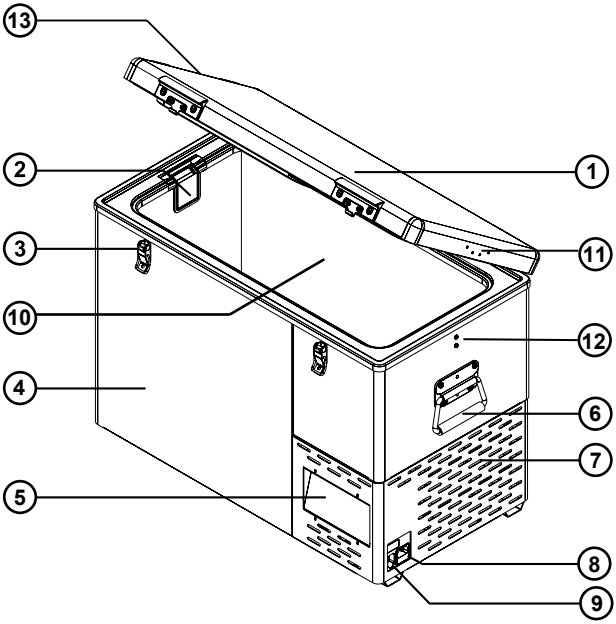


1. Lid
2. Interior light (24V 10W)
3. Lid locking latches
4. Cabinet exterior
5. Control panel
6. Carry handles
7. Compressor area
8. AC input with fuse (3.15A)
9. DC input with fuse (15A)
10. Cooling Bin (Evaporator)
11. Alternative lid handle position
12. Alternative lid latch position
13. Alternative lid hinge positions

# Control Panel

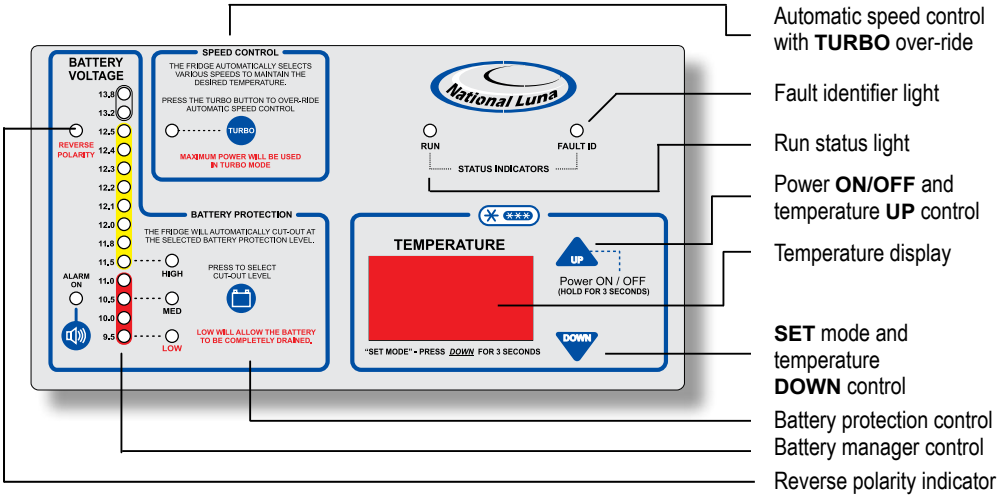


# On / Off control

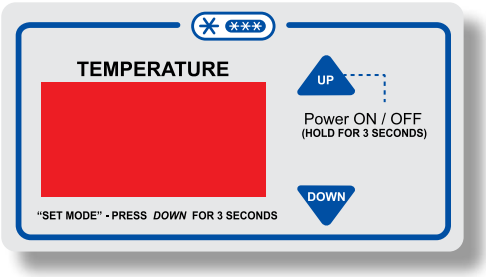


The refrigerator can be turned **ON** and **OFF** via the control panel.

Press and hold the UP button for 3 seconds to turn the fridge **ON** or **OFF**.

If power to the refrigerator is interrupted, it will default to **ON** automatically.
Note: When the fridge is switched off, the interior light will still function if the unit is connected to a power source.

# Speed Control

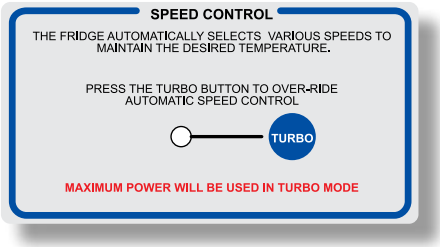


National Luna refrigerators have an advanced speed control which will vary the speed of the compressor in order to conserve power and optimise performance.

For situations where maximum cooling power is required, press and hold the "Turbo" button until the indicator is illuminated. TURBO

This will bypass automatic control and force high speed operation. (Refer page 9).

**Using the TURBO function can increase power consumption**

# Setting the Temperature - 50 Litre

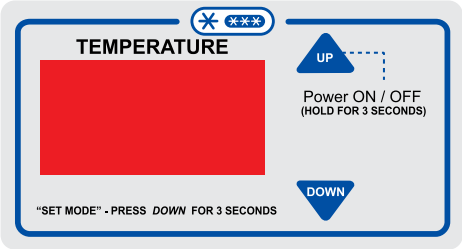


The digital thermostat fitted to the National Luna Portable refrigerator allows accurate setting of the desired cooling temperatures in the left hand fridge bin. (40 Litres)

Bin temperatures can be selected between +20°C and -12°C in 1°C increments.

When powering up the fridge, the temperature inside the fridge will be reflected on the display. (NOTE: the previously set temperature will be in memory)
To select the new cooling temperature, press and hold the DOWN button until the display starts to flash. (The previous set temperature will be displayed).

Press UP or DOWN to raise or lower the desired temperature. The thermostat will accept the new setting and exit the setting mode 10 seconds after the last button was pressed. (It will now remember the new set temperature).

The temperature display will reflect the inner bin temperature prior to the new setting. Provided the new setting is colder, the compressor will then switch on and cool the fridge further to the set point. (During this time the run indicator light will be displayed).

## Temperature dynamics of this unique fridge/freezer

- The 50 Litre Twin operates on a ratio of cooling capacity between the fridge and the freezer bin.
- The thermostat control is placed on the fridge bin side and controls fridge temperature only.
- The freezer has more cooling capability than the fridge compartment and will cool down to approximately 10°C colder than the fridge.
- The thermostat may be set down as low as -12°C which will aid the cooling down of a large volume of warm goods which have been placed in the fridge.
  Under this condition the compressor will run at high speed and possibly continuously if the ambient temperature is very high. The freezer compartment could get extremely cold (i.e -25°C).
  It is not ideal to run the fridge bin at low temperatures with the intention of running a dual freezer combination.

**This unit was not designed primarily to be used as a dual freezer.**
**Should the user choose to do so, power consumption will increase above single bin freezers.**

**During times when the ambient temperature surrounding the Weekender 50-Twin is below the thermostat setting, the fridge will not be required to run. Under this condition, the freezer compartment will not cool as this requires the fridge compartment to be cooled.**
**This condition may occur during winter months if the thermostat is not set to a lower temperature than ambient.**

# Setting the Temperature - 52 Litre

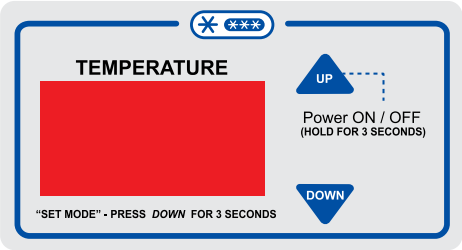


The digital thermostat fitted to the National Luna Portable refrigerator allows accurate setting of the desired cooling temperatures.

With the single compartment refrigerators, temperatures can be selected between +20°C and -30°C in 1°C increments.

When powering up the fridge, the temperature inside the fridge will be reflected on the display. (NOTE: the previously set temperature will be in memory)

To select the new cooling temperature, press and hold the DOWN button until the display starts to flash. (The previous set temperature will be displayed).

Press UP or DOWN to raise or lower the desired temperature. The thermostat will accept the new setting and exit the setting mode 10 seconds after the last button was pressed. (It will now remember the new set temperature).

The temperature display will reflect the inner bin temperature prior to the new setting. Provided the new setting is colder, the compressor will then switch on and cool the fridge further to the set point. (During this time the run indicator light will be displayed).

The user must take into account that the unit has thinner insulation than the classic range.

At very high ambient temperatures it is not recommended to set the freezer to below -11°C (as the compressor will automatically speed up to the high power mode in order to attain colder temperatures and thereby use excessive battery power).

## Battery Monitor and Protection

The Weekender is equipped with a battery monitor and low-battery “cut-out” protection circuit.

The monitor is intended to give an estimate of the available remaining energy in a 12-volt lead-acid battery. (For 24V systems the indicated battery voltage should be multiplied by two).

The battery monitor has a built-in low voltage alarm which provides audible warning of a low-battery condition. To activate the alarm, press and hold the button until the **“ALARM ON”** indicator is illuminated.

In the event of incorrect polarity, the reverse polarity indicator will be on and the fridge will not operate until the wiring is correctly connected.

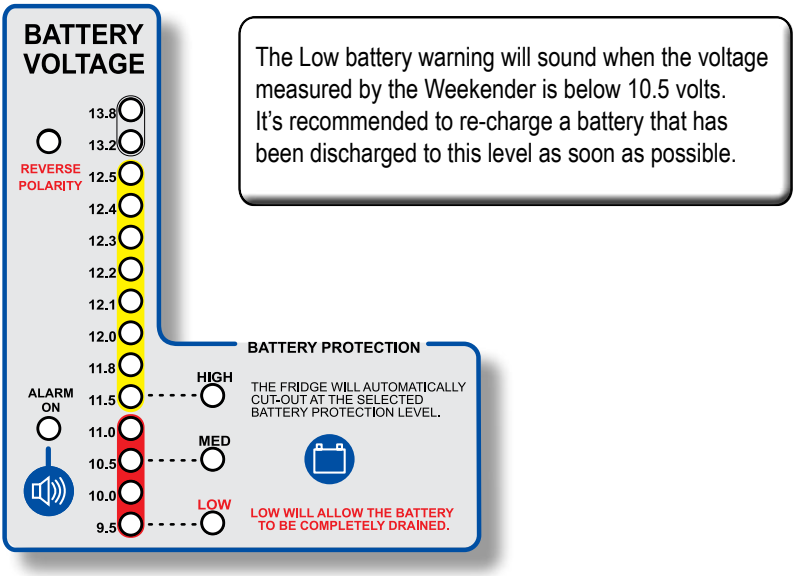


The Low battery warning will sound when the voltage measured by the Weekender is below 10.5 volts. It’s recommended to re-charge a battery that has been discharged to this level as soon as possible.

Combined with the battery monitor is a 3-stage battery protection “cut-out”. This feature is used to prevent the battery from being excessively discharged.

The user has the choice of 3 protection levels. These are linked to the voltages indicated on the battery monitor, and indicate at which voltage the fridge will cut-out.

Press and hold the button until the desired level is obtained.

The **“MED”** and **“LOW”** settings allow a deep discharge of the battery. However, due to possible wiring loss in the application vehicle, the voltage detected by the Weekender may be lower than the actual battery voltage. (See page 6)

For an accurate voltage reading the fridge should not be running.

# Dual-direction Lid

A special feature of the Weekender is the ability to change the direction in which the lid opens.
The most common configuration is the front-opening direction (shown).
If the application prevents the lid from opening fully or the refrigerator is installed long ways into a vehicle, is may be advantageous to use the side-opening configuration.

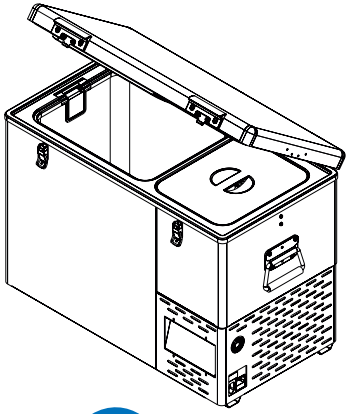

The Weekender is supplied in the front-opening configuration. In order to change the lid direction, follow these steps :

1. Close the lid. Remove both front latches and lid handles.
2. Re-fit one of the latches and lid handles to the alternative latch positions on the side of the refrigerator. (Keep the spare parts safe)
3. Remove all three hinges from the rear of the refrigerator. Also remove the hinge cover plates from the alternative hinge locations.
4. Re-fit two of the hinges on the side of the refrigerator.
5. Align the lid and ensure that it closes fully before tightening the screws.
6. Keep the spare hinge and screws in a safe place.

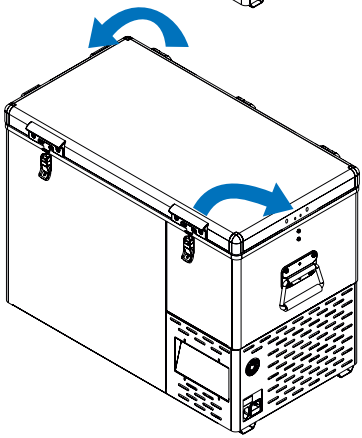

The Weekender will now be in the side-opening configuration

**NOTE:** Take care not to apply excessive pressure when locating the screws to the inside retaining nuts. (They can be pushed too far back or incorrectly angled).

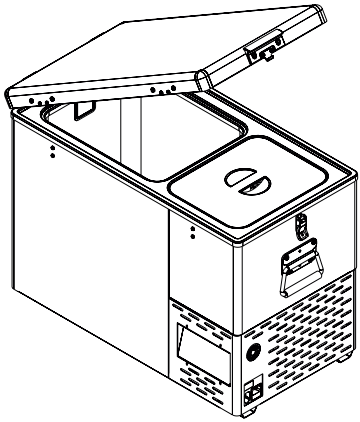

Three hinge cover plates are supplied (2 fitted) with the Weekender for covering the unused hinge holes.

Tip - The optional Weekender protection jacket has a side pocket which is ideal for keeping the spare hinge and latch parts.

# Troubleshooting

In the event of unusual or undesired operation, consult the table below before contacting a service agent.

| Problem | Possible Cause | Remedial Action |
|---|---|---|
| The fridge will not run when connected to 12V, but only when connected to 230V mains. | 12 Volt polarity reversed.<br>The battery is discharged.<br>The DC supply has inadequate wiring, causing voltage loss. (See page 6 and 10)<br>Fridge is initially connected to a battery that is not fully charged. | Check polarity to battery is correct.<br>Recharge the battery.<br>Ensure all connections are secure. Ensure supply has 4mm$^2$ wire or thicker and that the vehicle's body is not used as an earth.<br>Select "Low" on battery protection (See page 10) |
| Fault ID light flashes once every 4 seconds. | | |
| The ventilation fan is noisy or not running | The ventilation fan is blocked or damaged.<br>There is excessive dust or dirt build-up on the fan | Check the ventilation fan for obstructions.<br>If the fan is broken, return the refrigerator to an authorised agent for repair. |
| The Fault ID light is flashing twice every 4 seconds. | | |
| The Fault ID light is flashing 3 times every 4 seconds. | The compressor failed to start correctly.<br>High pressure due to over-load or electronic failure. | Under high pressure conditions this fault will rectify itself automatically when gas pressures equalise. Continuous 3-flash conditions may require electronic control replacement by an authorised service agent. |
| The Fault ID light is flashing 4 times every 4 seconds. | The compressor is not maintaining the correct minimum speed. | Continuous 4-flash conditions may require electronic control replacement by an authorised service agent. |
| The Fault ID light is flashing 5 times every 4 seconds. | Compressor area is over-heated.<br>The cooling fan is in-operative.<br>Ambient temperature very high.<br>Fridge over-loaded. | Check fan.<br>Ventilation inadequate.<br>Wait for ambient temperature to drop. (See page 11). |
| The thermostat display is showing " P r f " | The internal temperature probe is faulty, damaged or disconnected. | Contact a National Luna service agent for a probe replacement |

# NATIONAL LUNA LIMITED WARRANTY - SOUTH AFRICA

This National Luna Warranty supersedes any other advertised Guarantee or Warranty provided with this appliance by any wholesaler or retailer.

National Luna warrants this product to be free from defects in materials and / or workmanship under normal use and service to the original purchaser subject to the following :

1. At any time within THREE YEARS from the date of purchase by the original purchaser, National Luna will at its discretion replace or repair without cost to the owner, and if through an authorised service agent, any part found to be defective by National Luna.

   Where parts are replaced by an authorised service agent, the labour account for the work done will be for the owner's account.
2. This warranty does not apply to light bulbs, fuses, cooling fans or items where the length of life depends on the amount of use and care given.
3. The Danfoss BD35F compressor has a 1-year manufacturers guarantee.
   Correct completion and submission of the Warranty registration card supplied with this booklet allows for an additional 2-year warranty to be provided by National Luna on the compressor.
4. Removal of the serial number on the appliance will render this warranty void.
5. National Luna may consider a warranty void if modifications have been made to this appliance which may cause undesirable or hazardous operation or may be the cause of the malfunction of this product.
6. National Luna shall not be responsible for any damages of any kind resulting from incorrect voltages or faults with regards to power supply which fall outside of the appliance operating specifications.
7. National Luna shall not be responsible for damage to the appliance caused by negligent use, storage of hazardous chemicals, use of corrosive substances, fire, flood, civil-disturbances, lightning or any other natural phenomenon.
8. Warranty returns to the factory for repairs - in the event where the unit has been shipped to the factory for repairs, transport costs will be for the owners account.
9. National Luna will not accept any responsibility for the consequential loss or damage caused by, or due to the malfunctioning of this appliance.
10. National Luna shall not be held responsible for any injuries to persons caused by the incorrect or negligent usage of this appliance.
11. Repair work to be done in terms of this warranty must be referred to National Luna for written authorisation before any work is carried out.
12. National Luna reserves the right to refuse repair or service under warranty if the Warranty registration card or original proof of purchase cannot be produced.

For tracking and warranty purposes, please fill in the information below

Dealer's name / Stamp :

Serial No :_____

Model :_____

Date purchased : _____

Invoice No : _____

**www.nationalluna.com**

National Luna - South Africa
Tel : +27 (0)11 452-5438
Fax : +27 (0)11 452-5263

**NL - 13-5-2011 - M - R**