National Luna

Weekender

52-litre

Unique Hinge Design

Advanced Control

Introduction

The National Luna Weekender-52 litre is a high-performance, low-power portable refrigerator designed primarily for use in mobile applications.
The Weekender is capable of running from 220-volt AC or 12-volt DC battery power with the added feature of automatic speed control. This, combined with superior insulation and cooling surface make the Weekender the ultimate portable fridge / freezer.

The ***Weekender 52*** is a single compartment refrigerator with a volume of 52 litres. A digital thermostat allows the Weekender to operate at any temperature between 20°C and -30°C with an accuracy of ±2°C.

Superior efficiency allow the Weekender to operate in extreme environments while still conserving battery power.

The Weekender features selectable low-battery protection, speed control, battery monitor with low-voltage warning and fault indicators.

Before use

Unpacking the Weekender 52

The Weekender is supplied with the following parts: Please check that none of these parts are missing.

1	DC supply cable (2m long)
1	AC supply cable (3m long)
1	DC female socket (for vehicle installation)
2	Terminals (for use with DC socket)
1	Stainless steel basket
1	Spare hinge cover plate set
1	Instruction booklet (this manual)

Precautions during use

- When the Weekender is used in an automotive application, ensure that it is appropriately secured to prevent accidental movement. The fridge carry handles can be used with straps or tie-downs if necessary.
  A base-mounting plate is available as an optional extra for the Weekender

- Allow a 50mm air gap around the back and sides of the Weekender for ventilation.

- Ensure that the connected power lead (DC or AC) is fitted securely and does not pull loose unintentionally.

Getting to know your Weekender

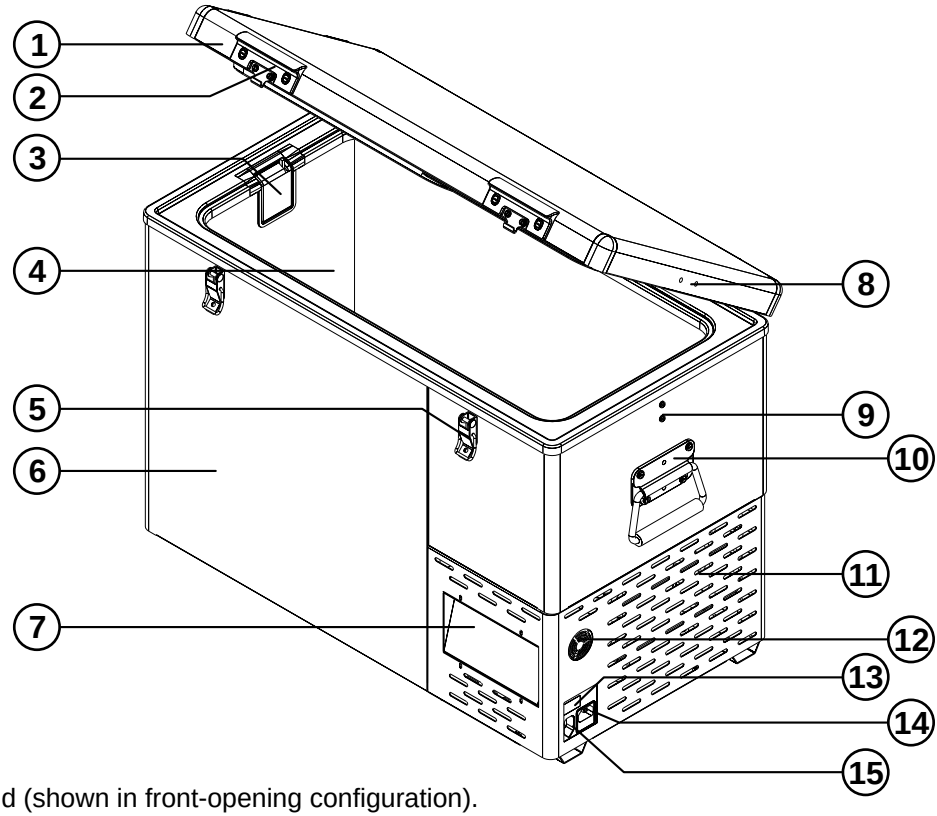

1. Lid (shown in front-opening configuration).
2. Lid handle.
3. Interior light.
4. Refrigerated bin.
5. Lid locking latch.
6. Insulated outer body.
7. Control panel.
8. Alternative lid handle position.
9. Alternative lid latch position.
10. Spring-loaded carry handle.
11. Compressor area.
12. Electronics cooling fan.
13. DC fuse. (15A automotive type)
14. AC input socket (with internal fuse)
15. DC input socket.

Connecting power

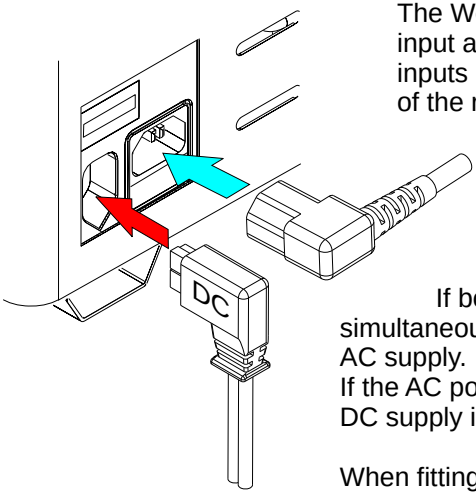

The Weekender is equipped with both 12-volt DC input as well as 230-volt AC mains input. Both power inputs are fuse-protected and are located on the side of the refrigerator.

Use the cables supplied in order to connect the Weekender to an appropriate power source.

If both the AC supply and DC supply are connected simultaneously, the Weekender will automatically use the AC supply.
If the AC power is interrupted, the Weekender will use the DC supply instead.

When fitting either power cable, ensure that the plug is pressed in firmly and does not pull loose easily.

Control Panel

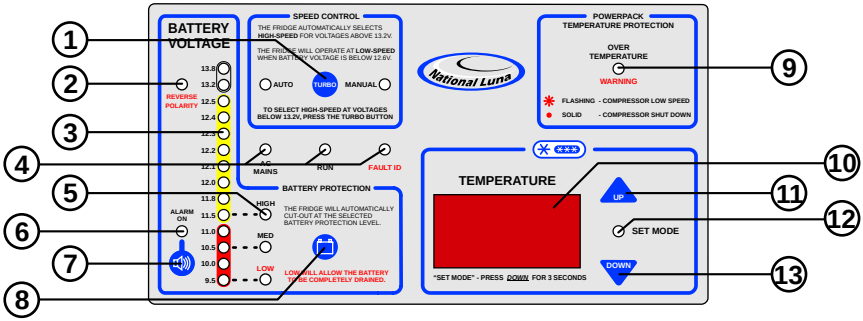

1. Manual turbo mode button.
2. DC supply reversed polarity indicator.
3. Battery monitor.
4. Status indicators.
5. Battery protection level indicators.
6. Audible alarm ON indicator.
7. Alarm ON / OFF selector button.
8. Battery protection level selector button.
9. Over-temperature warning indicator.
10. Temperature display.
11. Temperature UP button.
12. Temperature "set mode" indicator.
13. Temperature down / set mode button.

Setting the temperature

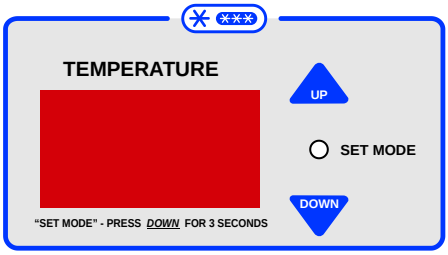

The digital thermostat fitted to the Weekender allows accurate setting of the desired cooling temperature.

The thermostat can operate in a range of 20°C to -30°C in 1°C steps.

To change the thermostat setting, press and hold the DOWN button until the "SET MODE" indicator is illuminated. Now press UP or DOWN to choose the desired temperature.
When the desired setting is reached, release all buttons and the display will return to the current temperature after 10 seconds.

Recommended Food storage guide			
Fresh produce	3°C ~ 8°C	Frozen meats	-6°C ~ -18°C
Cooked meats	2°C ~ 5°C	Ice	-12°C
Cold beverages	1°C ~ 6°C	Ice cream	-18°C
Non-frozen dairy	1°C ~ 5°C		
Chilled seafood	0°C ~ 3°C		

Speed Control

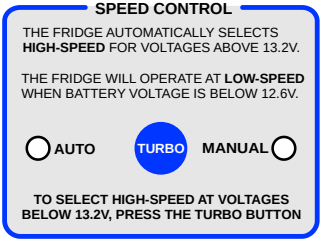

During normal operation, the Weekender cooling speed is automatically controlled to optimise power consumption.

When operating on battery power, the Weekender will run at low speed. If additional power is available (when the battery is being recharged), the Weekender will automatically run at high speed.

To force high-speed operation (Turbo mode) when running on battery power, press and hold the TURBO button until the "MANUAL" indicator is illuminated.

Note that the Weekender will always run at high speed when mains power is connected.

Tip Pack the Weekender and run with mains power the night before departing on a journey. This ensures that the contents of the Weekender are pre-cooled and the refrigerator requires minimum battery power to maintain the internal temperatures

Battery Monitor and protection

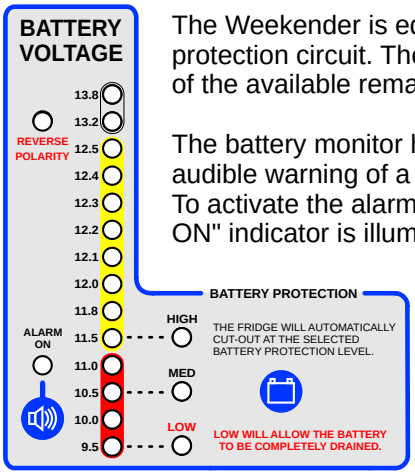

The Weekender is equipped with a battery monitor and low-battery protection circuit. The battery monitor is intended to give an estimate of the available remaining energy in a 12-volt lead-acid battery.

The battery monitor has a built-in low voltage alarm which provides audible warning of a low-battery condition.
To activate the alarm, press and hold the button until the "ALARM ON" indicator is illuminated.

The Low battery warning will sound when the voltage measured by the Weekender is below 11.5 volts. It is recommended to re-charge a battery that has been discharged to this level as soon as possible.

Combined with the battery monitor is a 3-stage battery protection control. This feature is used to prevent the connected battery from being excessively discharged.

The user has the choice of 3 protection levels. These are linked to the voltages indicated on the battery monitor, and indicate at which voltage the fridge will cut-out.

Press and hold the button until the desired level is obtained.

The "MED" and "LOW" settings allow a deep discharge of the battery. However, due to possible wiring loss in the application vehicle, the voltage detected by the Weekender may be lower than the actual battery voltage.

Battery voltage compared to capacity

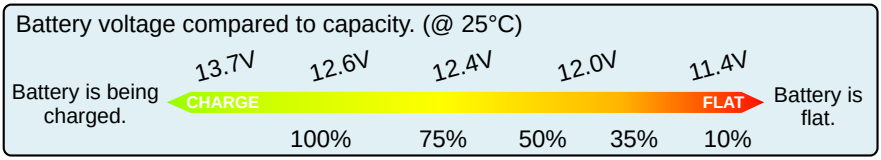

The voltage of a lead-acid battery can be an indication of its state-of-charge.
By measuring the voltage, we can estimate the amount of energy remaining in the battery.

Changes in temperature, battery age and general battery health can influence this relationship and therefore result in inaccurate capacity measurement.
The voltage-capacity relationship is most accurate when the battery is at 25°C.

Status Indicators

The National Luna Weekender is equipped with status indicators which show the operation of the refrigerator and help to identify faults that may occur.

A brief description of the status indicators is shown below :

MAINS - This light will be illuminated when 240V AC mains power is applied. In this mode, the refrigerator will operate at high-speed.

RUN - This indicator will be illuminated whenever the refrigerator compressor is running. (either on mains or battery power)

FAULT ID. - This indicator is used to identify common faults. The light will flash a sequence of pulses and then pause before repeating the code.

Refer to the Troubleshooting section Pg 8 for more details.

# of flashes	Fault description
1	Low voltage. This is shown when the supply voltage is low. The battery could be flat, wiring losses are too high or there is a poor connection to the power source.
2	Fan over-current cut-out. There is a problem with the ventilation fan. It is possible that the ventilation fan is obstructed, blocked or damaged.
3	Motor start error. The compressor has not started successfully. This can happen in extreme environments where the refrigerator is heavily loaded and temperature is very high.
4	Minimum speed error. The motor cannot maintain a minimum speed of 1900 rpm. This can be the result of an internal electronics failure.
5	Thermal cut-out. The electronic circuitry has over-heated. This can occur in very hot environments. The electronics will reset when the temperature has dropped.

REVERSE POLARITY - This indicator identifies that the power applied to the 12V input has the incorrect polarity. Check all wiring connections for correct polarity.

POWER PACK OVER-TEMPERATURE - In the event that the fridge electronics overheat, a cooling fan will be activated. If the fan cooling is insufficient to correct the error, the refrigerators' compressor will automatically slow-down (over-temperature light will flash).
If temperatures continue to increase, the refrigerator will be shut-down as a protection feature (over-temperature light will be permanently illuminated)

This error is self-correcting and normal operation will resume when electronic temperatures return to normal.

Dual-direction Lid

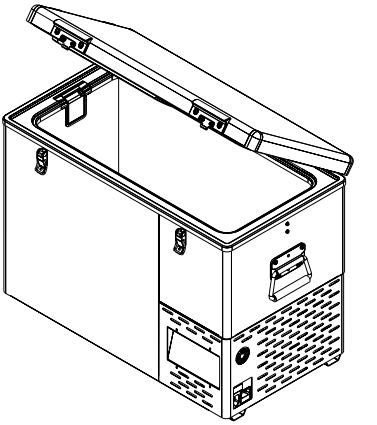

A special feature of the Weekender is the ability to change the direction in which the lid opens.
The most common configuration is the front-opening direction (shown).
If the application prevents the lid from opening fully or the refrigerator is installed longways into a vehicle, it may be advantageous to use the side-opening configuration.

The Weekender is supplied in the front-opening configuration. In order to change the lid direction, follow these steps :

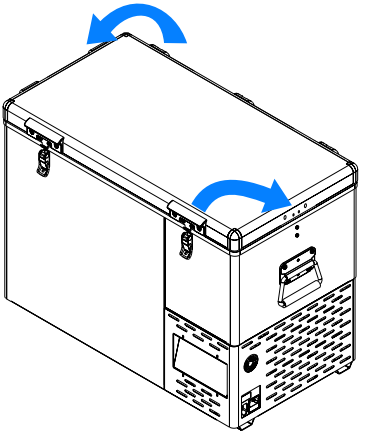

1. Close the lid. Remove both front latches and lid handles.

2. Re-fit one of the latches and lid handles to the alternative latch positions on the side of the refrigerator. (Keep the spare parts safe)

3. Remove all three hinges from the rear of the refrigerator. Also remove the hinge cover plates from the alternative hinge locations.

4. Re-fit two of the hinges on the side of the refrigerator.

5. Align the lid and ensure that it closes fully before tightening the screws.

6. Keep the spare hinge and screws in a safe place.

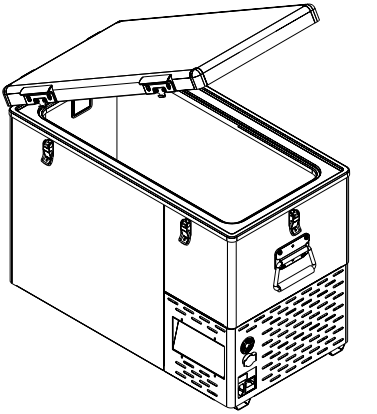

The Weekender will now be in the side-opening configuration.

Three hinge cover plates are supplied (2 fitted) with the Weekender for covering the unused hinge holes.

Tip - The optional Weekender protection jacket has a side pocket which is ideal for keeping the spare hinge and latch parts.

Troubleshooting

In the event of unusual or undesired operation, consult the table below before contacting a service agent.

Problem	Possible cause	Remedial action
The fridge will not run when connected to 12V, but only when connected to 230V mains.	The battery is low. The DC supply has inadequate wiring.	Recharge the battery. Ensure supply socket has 4mm^2 wire or thicker and the vehicle body is not used as an earth. Ensure all connections are secure.
Fault ID light flahes once every 5 seconds.		
The ventilation fan is noisy or not running.	The ventilation fan is blocked or damaged.	Check the ventilation fan for obstructions. If the fan is broken, return the refrigerator to an authorised agent for repair.
The Fault ID light is flashing twice every 5 seconds.		
The Fault ID light is flashing 3 or 4 times every 5 seconds.	The compressor failed to start correctly or run at its minimum speed.	If the refrigerator continues to show the error for an extended period of time, contact an authorised service agent.
The battery voltage monitor is not showing the correct battery voltage.	There are significant cable or connection losses.	Make sure the supply socket has been installed with adequate wire and good connections. If another load (eg. spotlight) is connected to the same supply, cable losses are magnified.
The speed control will not change when the button is pressed and the fridge is connected to a 12-volt supply.	The button was not pressed for long enough	The button must be pressed for 3-seconds.

Installation guidelines

When installing the Weekender into a vehicle for the first time, ensure that the electrical connections to the vehicle's battery are secure and the appropriate wiring is used.

The Weekender is supplied with a pre-made cable for use with a 12-volt supply.
This cable is terminated with a high-quality plug for connection into your vehicle.

Centre pin (+)

1. Install the supplied socket into your vehicle in a convenient location.

2. Use a suitable cable to connect the socket to the vehicle's battery.
   A cable thickness of 4mm^2 or greater is recommended.

When installing electrical outlets in your vehicle, do not rely on the vehicle's body for an electrical earth.

Fitting an in-line fuse.

Although the Weekender has a built-in fuse, it is recommended to install an additional fuse on the positive wire as close to the battery as possible. (This will protect against short-circuits that may occur along the length of the cable).

Ensure that all connections are properly crimped and insulated.

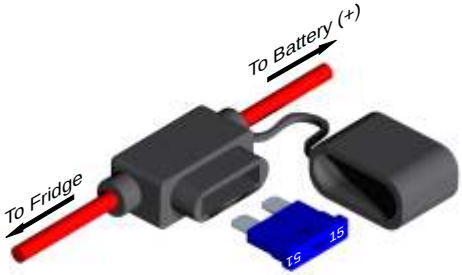

An automotive fuse with a rating of 15A is recommended.

If you choose to change the attached plug on the DC cable for a different type, first ensure that the cable is unplugged before cutting it.

Split and strip the wires as required for the new plug. Take care to ensure that the correct polarity is used on the plug and crimp the connections where possible.
If the "Reverse Polarity" indicator on the Weekender control panel illuminates, reverse the wiring in the plug to correct the problem.

National Luna Limited Warranty

This National Luna Warranty supercedes any other advertised Guarantee or Warranty provided with this appliance by any wholesaler or retailer.

National Luna warrants this product to be free from defects in materials and / or workmanship under normal use and service to the original purchaser subject to the following :

1. At any time within **THREE YEARS** from the date of purchase by the original purchaser, **National Luna** will at its discretion replace or repair without cost to the owner, and if necessary through an authorised service agent, any part found to be defective by **National Luna.**

2. This warranty does not apply to light bulbs, pilot lights, fuses, cooling fan or item where the length of life depends on the amount of use and care given.

3. The Danfoss BD35F compressor has a **1-year manufacturers guarantee**.
   Correct completion and submission of the Guarantee registration card supplied with this booklet allows for an additional 2-year warranty to be provided by **National Luna** on the compressor.

4. Removal of the serial number on the appliance will render this warranty void.

5. **National Luna** may consider a warranty void if modification have been made to this appliance which may cause undesireable or hazardous operation or may be the cause of the malfunction of this product.

6. **National Luna** shall not be responsible for any damages of any kind resulting from incorrect voltages or faults with regards to power supply which falls outside of the appliance operating parameters.

7. **National Luna** shall not be responsible for damage to the appliance caused by negligent use, storage of hazardous chemicals, use of corrosive substances, fire, flood, civil-disturbances, lightning or any other natural phenomenon.

8. It is a condition of this warranty that **National Luna** shall not be responsible for transportation or any costs incurred in transporting this appliance. (Including costs incurred by damage, incorrect packaging or theft).

9. **National Luna** will not accept any responsibility for the loss or damage caused by, or due to, the malfunctioning of this appliance.

10. **National Luna** shall not be held responsible for any injuries to persons caused by the incorrect or negligent usage of this appliance.

11. Repair work to be done in terms of this warranty must be referred to National Luna for written authorisation before any work is carried out.

12. National Luna reserves the right to refuse repair or service under warranty if the Guarantee registration card and original proof of purchase cannot be produced.

For tracking and warranty purposes, fill in the information below.

Serial No : _____

Model : _____

Date purchased : _____

Invoice No : _____

Dealer's name / Stamp :

Specifications

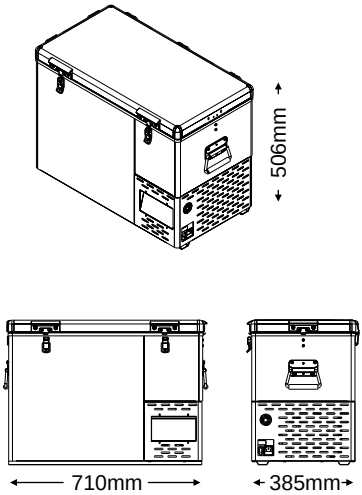

External dimentions (lid closed)	710mm (L) x 385mm (W) x 506mm (H)
External dimentions (lid open)	710mm (L) x 385mm (W) x 845mm (H) * Lid in front-opening configuration
Weight	23Kg Weekender 52 (without optional accessories)
Exterior finish	Aluminium (Stucca metallic grey)
Interior finish	Aluminium (Smooth metallic grey)
Refrigerant	R134a (CFC Free)
AC power range	170V AC ~ 270V AC (0.40A)
DC power range	9.6V DC ~ 15V DC (2.5A)
Power consumption	±31W - 2.5A average running current at low speed. * with battery at 12.5V under normal conditions

Inside Dimentions - showing useable volume

Weekender 52

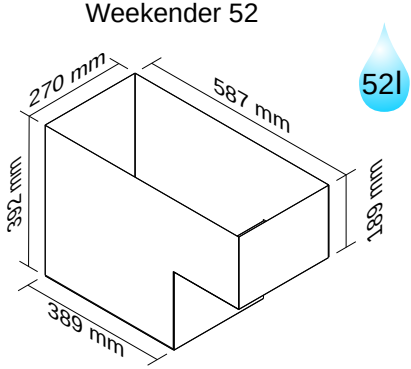

www.nationalluna.com

National Luna - South Africa
Tel : +27 (0)11 452-5438
Fax : +27 (0)11 452-5263
e-mail : natluna@mweb.co.za