START HERE!

READ ME FIRST

Don't be a hero and muscle through this installation without reading these fitting instructions first! Improper installation of this gear may void certain aspects of your warranty.

Before you begin, take a moment and open all your Front Runner rack kit boxes and gather the assembly instructions for the various components.

A complete kit will contain:

1. A Front Runner Mounting System specific to your vehicle
2. A Front Runner Rack Tray or Load Bar Slats

This document will guide you through the assembly of the mounting system and assist you in fitting the roof rack tray or load bars to your specific vehicle. Please refer to the next page for a list of all the components, quantities and tools required.

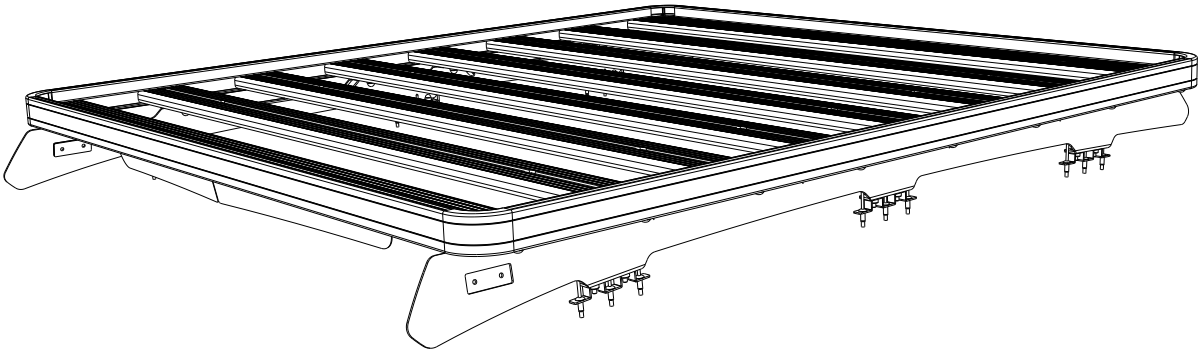

IMPORTANT WARNING! ⚠

IT IS CRITICAL THAT ALL FRONT RUNNER PRODUCTS BE PROPERLY AND SECURELY ASSEMBLED AND ATTACHED TO YOUR VEHICLE. IMPROPER ATTACHMENT COULD RESULT IN AN AUTOMOBILE ACCIDENT, AND COULD CAUSE SERIOUS BODILY INJURY OR DEATH. YOU ARE RESPONSIBLE FOR ASSEMBLING AND SECURING ALL FRONT RUNNER PRODUCTS TO YOUR VEHICLE, CHECKING THE ATTACHMENTS PRIOR TO USE, AND PERIODICALLY INSPECTING THE PRODUCTS FOR ADJUSTMENT, WEAR AND DAMAGE. THEREFORE, YOU MUST READ AND UNDERSTAND ALL OF THE INSTRUCTIONS AND PRECAUTIONS SUPPLIED WITH YOUR FRONT RUNNER PRODUCT PRIOR TO INSTALLATION OR USE. IF YOU DO NOT UNDERSTAND ALL OF THE INSTRUCTIONS AND CAUTIONS, OR IF YOU HAVE NO MECHANICAL EXPERIENCE AND ARE NOT THOROUGHLY FAMILIAR WITH THE INSTALLATION PROCEDURES, YOU SHOULD HAVE THE PRODUCT INSTALLED BY A PROFESSIONAL INSTALLER OR OTHER QUALIFIED PERSONNEL.

NOTE: Front Runner will not be responsible for any damage caused by the failure to install the product according to these instructions.

Please call us if you have any questions about the installation of this product.

 © 2021 FRONT RUNNER VEHICLE OUTFITTERS

1 GET ORGANIZED

IN THE BOX

1	2 X	Foot Rail 1 LH + 1 RH
2	6 X	Saddle Bracket
3	18 X	M6 Jack Nut
4	18 X	M6 x 12 x 1SS Flat Washer
5	30 X	M6 SS Spring Washer
6	18 X	M6 x 30 Hex Bolt
7	30 X	M6 Nut Cap
8	12 X	M6 x 20 Hex Bolt
9	12 X	M6 x 19 x 1 SS Flat Washer
10	12 X	M8 x 20 Hex Bolt
11	12 X	M8 x 19 x 2 SS Flat Washer
12	12 X	M8 Nyloc Nut
13	12 X	M8 Nut Cap
14	2 X	M6 x 30 Button Head Bolt
15	1 X	Installer Wrench

TOOLS NEEDED

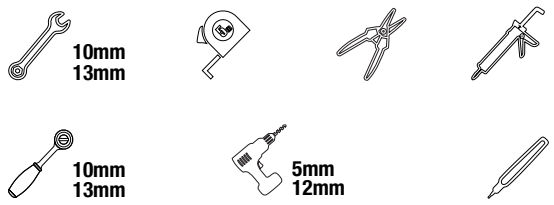

4mm Allen Key Bit

FIGURE 1.1

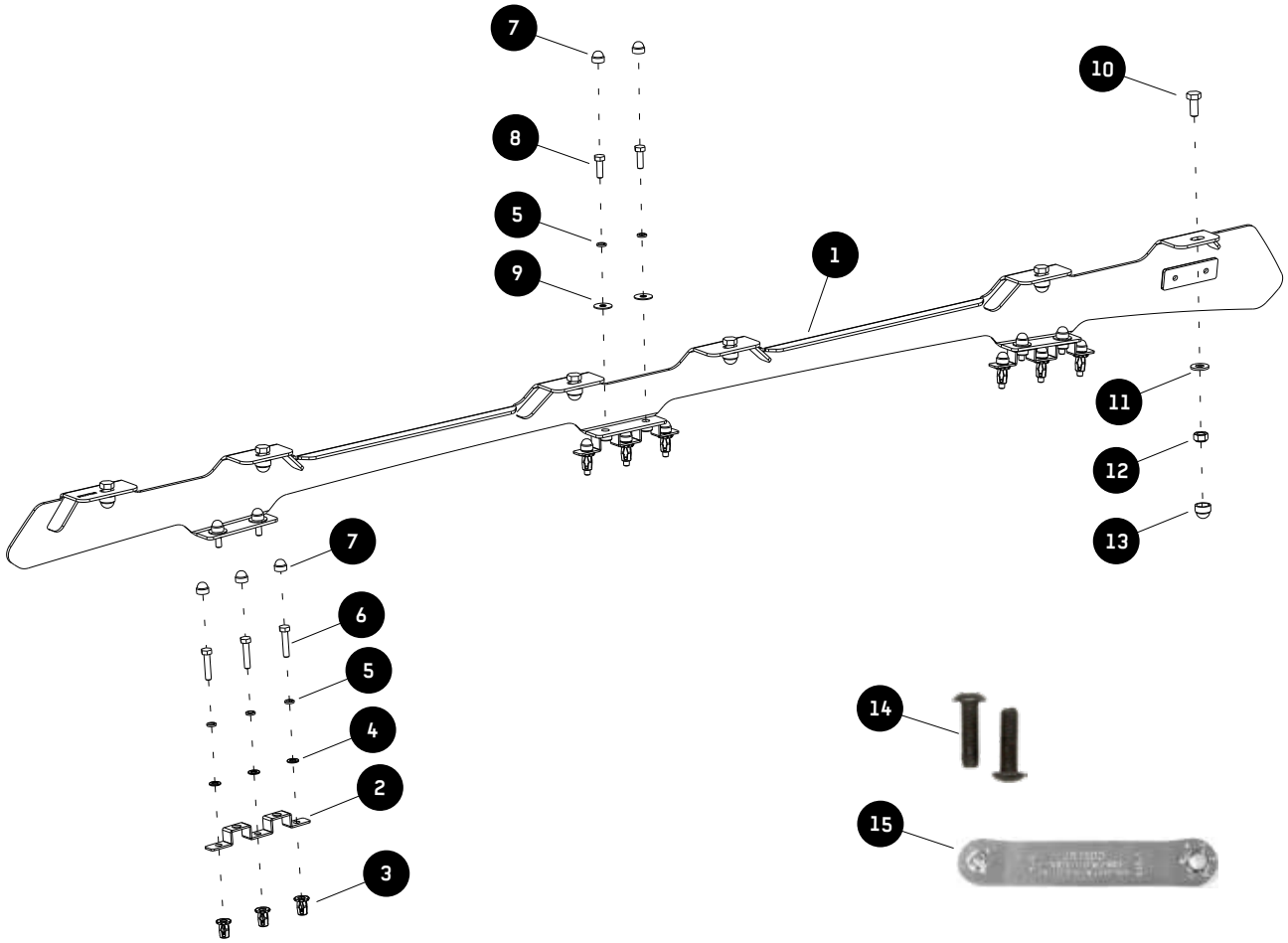

 © 2021 FRONT RUNNER VEHICLE OUTFITTERS

2 FIT AND SECURE

2.1

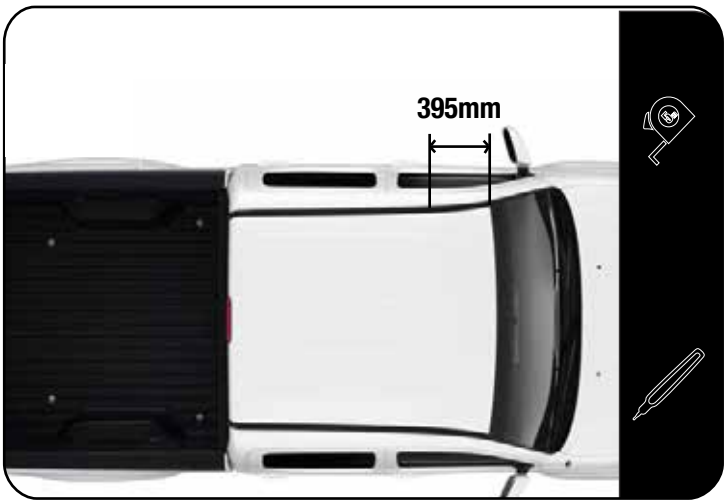

Remove the two rubber ditch mouldings from the vehicle.

Measure 395mm from the top edge of the windscreen and make a mark in the center of the ditch.

2.2

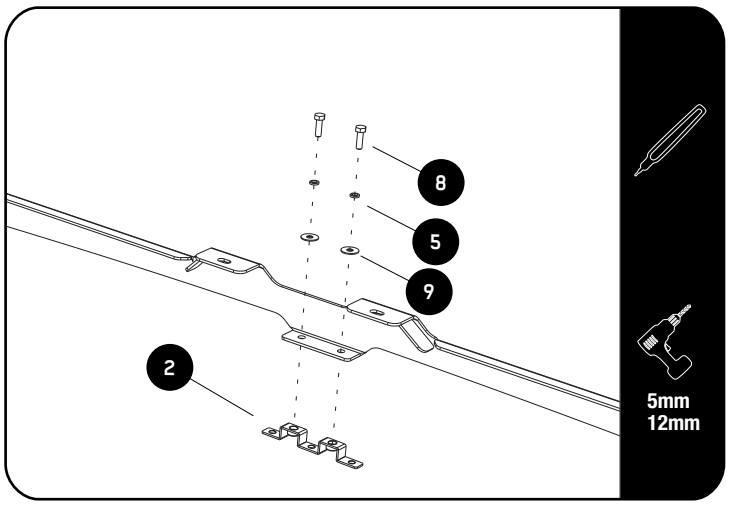

Loosely assemble the Saddle Brackets (Item 2) to the Foot Rail using M6 x 20 Hex Bolts, M6 SS Spring Washers and M6 x 19 x 1SS Flat Washers (Items 5, 8 & 9).

Position the assembly in the ditch. Locate it over the front mark you have made in Step 2.1 and mark the front and rear hole in each of the Saddle Brackets.

Remove the Foot Rail from the vehicle. Loosen one of the Saddle Brackets and set it over each pair of marks in the ditch. Mark the middle hole of the Saddle Bracket now that you have access.

Drill a 5mm Pilot hole on all the markings made (9 per side). Re Drill the holes using a 12mm Drill.

NOTE: Take care when drilling as there are airbag canisters & wiring below. Do not apply to much downward force, let the drill do the work. Use a drill spacer or place tape around the drill bit as a guide. Roof skin is +/- 6mm thick.

 © 2021 FRONT RUNNER VEHICLE OUTFITTERS

2 FIT AND SECURE

2.4

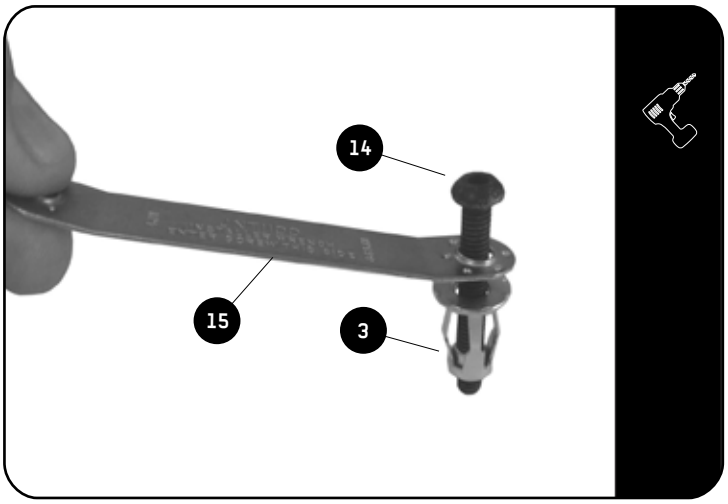

Using the Installer Wrench (Item 15) and a M6 x 30 Button Head Bolt (Item 14), insert the M6 Jack Nuts (Item 3).

Insert the M6 Button Head Bolt into the one side of the Installer Wrench. Loosely fit a Jack Nut to the Button Head Bolt as shown.

Place the assembly into the hole drilled in Step 2.2. Using a Drilling Machine and a 4mm Allen Key Bit secure the Jack Nut into the hole while holding onto the handle of the Installer Wrench.

Make sure that the Jack Nut has pulled up all the way to the inside skin of the roof panel.

2.5

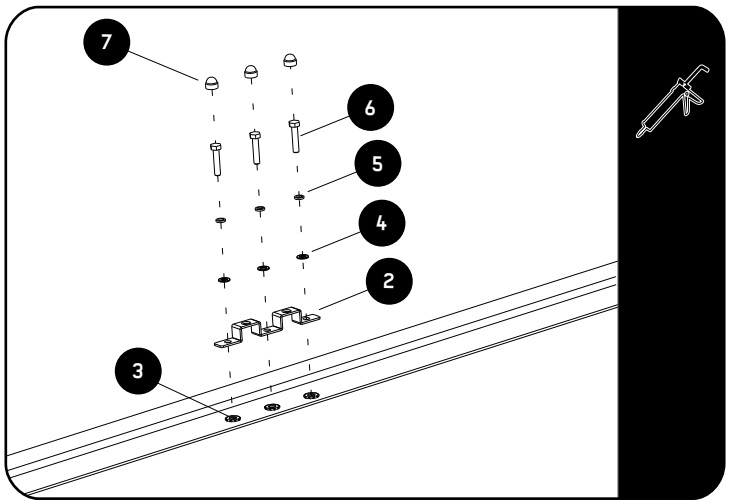

Apply a bead of silicon around each of the Jack Nuts (Item 3) you have inserted in Step 2.3 before securing the Saddle Brackets (Item 2) using M6 x 30 Hex Bolt, M6 SS Spring Washers and M6 x 12 x 1SS Flat Washers (Items 4, 5 & 6) as shown.

Use M6 nut caps (Item 7) to finish off the bolt heads.

2.6

Lay the rubber ditch moulding on the roof removed earlier, aligning it with its mounting locations front to rear.

Mark the sections to be cut out for the Saddle Brackets. Cut the marked sections and fit the rubber moulding back into the ditch.

© 2021 FRONT RUNNER VEHICLE OUTFITTERS

2 FIT AND SECURE

2.7

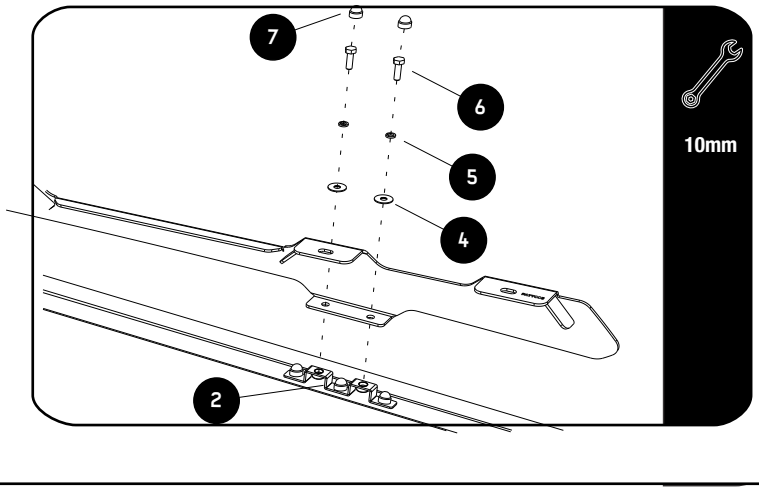

Fit the Foot Rails to the Saddle Brackets using M6 x 20 Hex Bolts, M6 SS Spring Washers and M6 x 19 x 1 SS Flat Washers (Items 4, 5 & 6).

Place M6 Nut Caps (Item 7) on all the Hex Bolts.

3 FIT AND SECURE

3.1

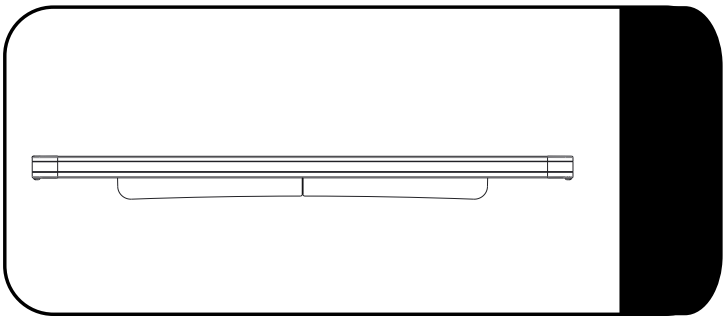

Make sure that the wind deflector is installed before you proceed to the next step.

3.2

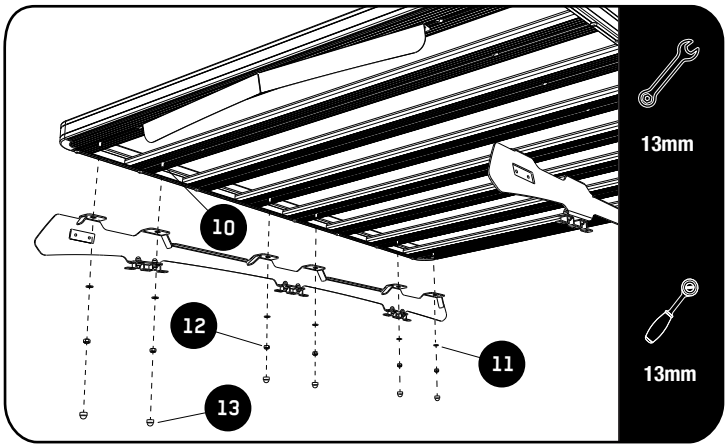

Fit your Roof Rack to the Foot Rails using M8 x 20 Hex Bolts, M8 x 16 x 1.6SS Flat Washers and M8 Nyloc Nuts (Items 10, 11 & 12).

3.3

Center the rack and tighten fully. Use M8 nut caps (Item 13) to finish off the nuts.

© 2021 FRONT RUNNER VEHICLE OUTFITTERS

4 INSTALL OTHER VEHICLE AND RACK ACCESSORIES

Now's the time to visit your favorite Front Runner Dealer in person or online.

IMPORTANT! ⚠

FRONT RUNNER RACK KITS OFTEN HAVE A HIGHER LOAD RATING THAN THE VEHICLES THEY ARE MOUNTED TO. PLEASE REFER TO YOUR SPECIFIC VEHICLE MANUFACTURER FOR A RECOMMENDED ROOF RATING. FRONT RUNNER CANNOT BE RESPONSIBLE FOR IMPROPER LOADING BEYOND THE VEHICLE MANUFACTURER'S STATED LOAD CAPACITY.

Be sure to tag us. We love to see our gear in action! #FrontRunnerOutfitters #BornToRoam

Share your adventures on:

© 2021 FRONT RUNNER VEHICLE OUTFITTERS