START HERE!

READ ME FIRST

Don't be a hero and muscle through this without first reading these fitting instructions! Improper installation of this gear may void certain aspects of your warranty.

Before you begin, take a moment and open all your Front Runner rack kit boxes and gather the assembly instructions for the various components.

A complete kit will contain:

1. A Front Runner Mounting System specific to your vehicle
2. A Front Runner Rack Tray or Load Bar Slats

This document will guide you through the assembly of the mounting system and assist you in fitting the roof rack tray or load bars to your specific vehicle.

Please refer to the next page for a list of all the components, quantities and tools required.

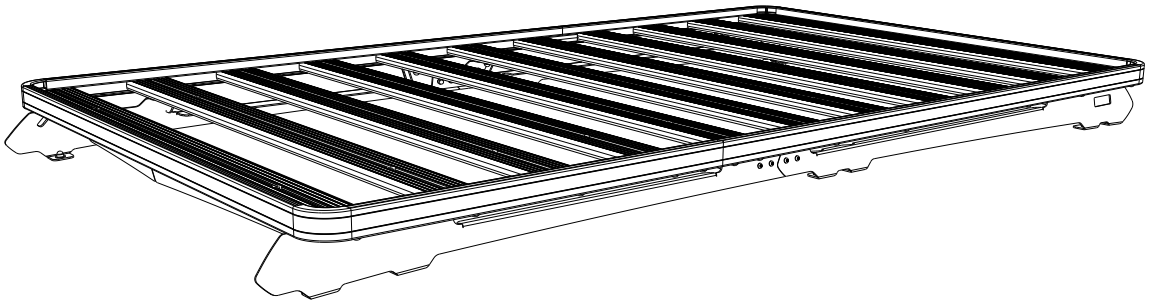

Front Runner will not be responsible for any damage caused by the failure to install the product according to these instructions. Please call us if you have any questions about the installation of this product.

IMPORTANT WARNING! ⚠

FRONT RUNNER CAN NOT RECOMMEND A MAXIMUM LOAD CARRYING CAPACITY. PLEASE REFER TO YOUR VEHICLE MANUFACTURER'S RECOMMENDATIONS. IT IS CRITICAL THAT ALL FRONT RUNNER PRODUCTS BE PROPERLY AND SECURELY ASSEMBLED AND ATTACHED TO YOUR VEHICLE. IMPROPER ATTACHMENT COULD RESULT IN AN AUTOMOBILE ACCIDENT, AND COULD CAUSE SERIOUS BODILY INJURY OR DEATH. YOU ARE RESPONSIBLE FOR ASSEMBLING AND SECURING ALL FRONT RUNNER PRODUCTS TO YOUR VEHICLE. CHECKING THE ATTACHMENTS PRIOR TO USE, AND PERIODICALLY INSPECTING THE PRODUCTS FOR ADJUSTMENT, WEAR AND DAMAGE. THEREFORE YOU MUST READ AND UNDERSTAND ALL OF THE INSTRUCTIONS AND PRECAUTIONS SUPPLIED WITH YOUR FRONT RUNNER PRODUCT PRIOR TO INSTALLATION OR USE. IF YOU DO NOT UNDERSTAND ALL OF THE INSTRUCTIONS AND CAUTIONS, OR IF YOU HAVE NO MECHANICAL EXPERIENCE AND ARE NOT THOROUGHLY FAMILIAR WITH THE INSTALLATION PROCEDURES, YOU SHOULD HAVE THE PRODUCT INSTALLED BY A PROFESSIONAL INSTALLER OR OTHER QUALIFIED PERSONNEL.

 © COPYRIGHT 2018 FRONT RUNNER VEHICLE OUTFITTERS

1 GET ORGANIZED

IN THE BOX

1	2 X	Front Foot Rail 1LH + 1RH
2	2 X	Rear Foot Rail 1LH + 1RH
3	2 X	Joiner Plate
4	8 X	M6 x 16 Button Head
5	8 X	M6 x 12 x 1SS Flat Washer
6	8 X	M6 Nyloc Nut
7	20 X	M6 Nut Cap
8	12 X	M6 x 35 Hex Bolt
9	12 X	M6 SS Spring Washer
10	12 X	M6 x 19 x 1SS Flat Washer
11	12 X	Spacer
12	12 X	M8 x 20 Hex Bolt
13	12 X	M8 x 16 x 1.6SS Flat Washer
14	12 X	M8 Nyloc Nut
15	12 X	M8 Nut Cap
16	12 X	PVC Washer 24.5 x 2.5
17	8 X	Plastic Rivet 8mm

TOOLS NEEDED

FIGURE 1.1

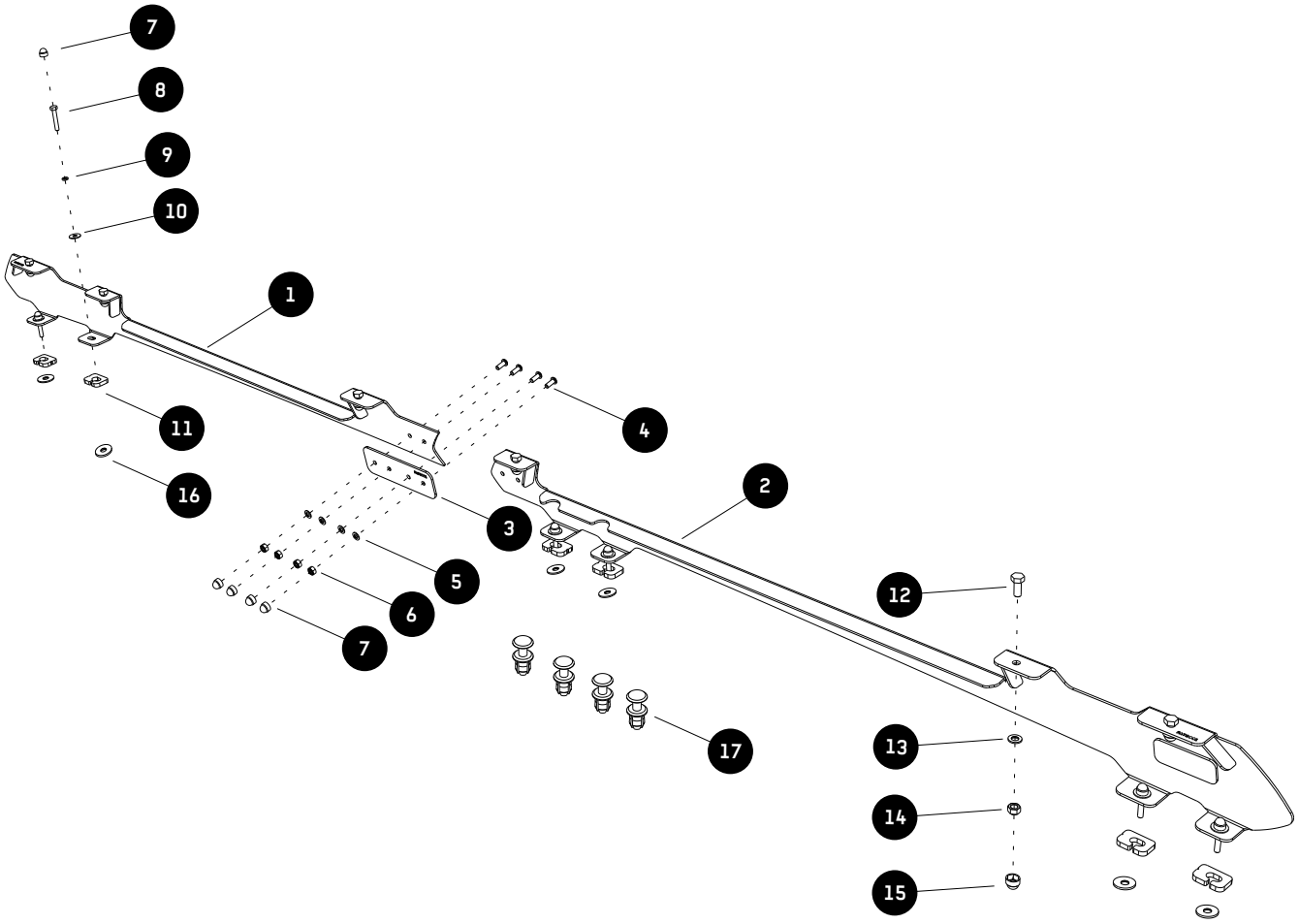

 © COPYRIGHT 2018 FRONT RUNNER VEHICLE OUTFITTERS

2 FIT AND SECURE

2.1

Before starting the fitment you need to loosen and remove the factory roof rail from the vehicle.

2.2

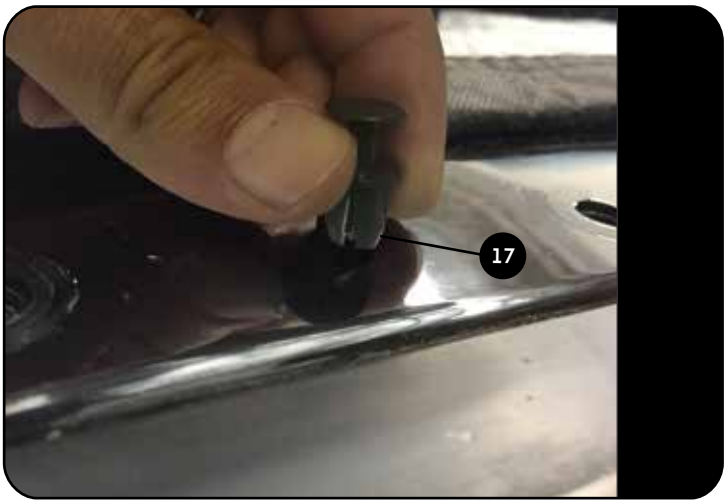

Place an Plastic Rivet (Item 17) in each of the locating holes of the factory roof rails.

Place some silicone sealant around each hole before inserting the plastic rivet.

2.3

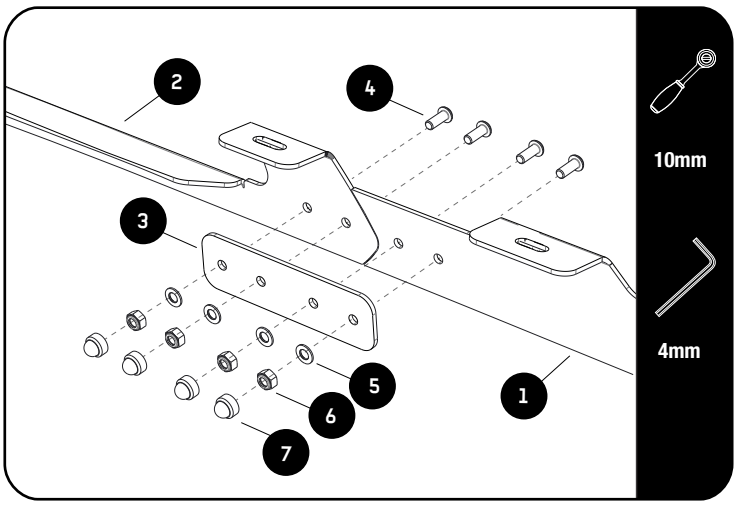

Join the Front LH and Rear LH Foot Rail (Items 1 & 2) with the Joiner Plate (Item 3) using M6 x 16 Buttom Head Bolts, M6 x 12 x 1SS Flat Washers and M6 Nyloc Nuts (Items 4, 5 & 6).
Place M6 Nut Caps (Item 7) over all the Nyloc Nuts.

Repeat this for the Front RH and Rear RH Foot Rail.

© COPYRIGHT 2018 FRONT RUNNER VEHICLE OUTFITTERS

2 FIT AND SECURE

2.4

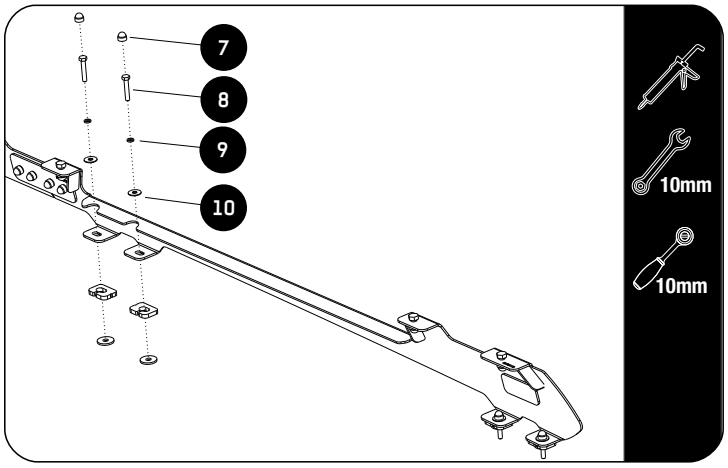

Place a PVC Washer (Item 16) over each of the mounting holes in the vehicle's roof followed by a Spacer (Item 11).

Fill the spacer centers with silicone sealant and apply a bead down the length of each of the screws used to secure the rails to the roof inserts

Secure the Foot Rail using M6 x 35 Hex Bolts, M6 SS Spring Washers M6 x 19 x 1SS Flat Washers (Item 8, 9 & 10) as shown.

Finish off by placing M6 Nut Caps (Item 7) on all the bolt heads.

Repeat this on both sides of the vehicle.

3 FIT AND SECURE

3.1

Refer to RRSTUNI when assembling your Slimline II Tray.

3.2

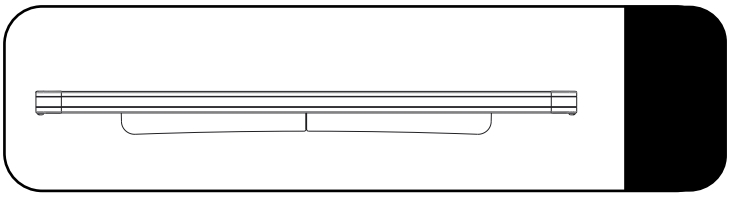

Make sure that the wind deflector is installed before you proceed to the next step.

3.3

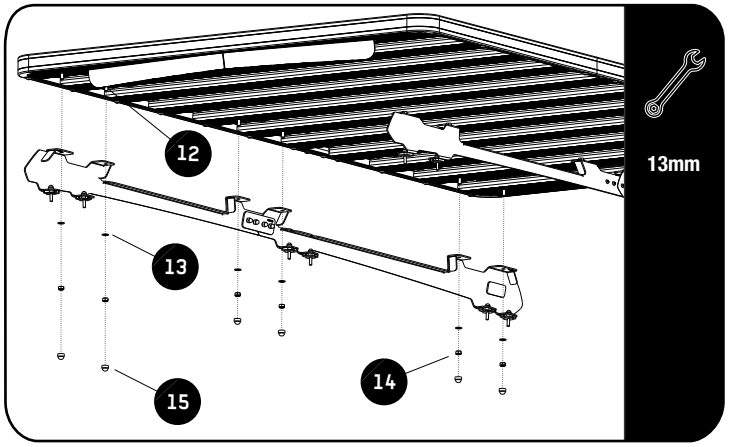

Fit your roof rack to the Foot Rails using M8 x 20 Hex Bolts, M8 x 16 x 1.6SS Flat Washers and M8 Nyloc Nuts (Items 12, 13 & 14).

3.4

Center the rack and tighten fully. Use M8 nut caps (Items 15) to finish off the nuts.

© COPYRIGHT 2018 FRONT RUNNER VEHICLE OUTFITTERS

4 COMPLETION

4.1

Congratulations! You did it. Take a step back and admire your work!

6 INSTALL OTHER VEHICLE AND RACK ACCESSORIES

Now's the time to visit your favorite Front Runner Dealer in person or online.

Be sure to tag us. We love to see our gear in action! #FrontRunnerOutfitters #BornToRoam

Share your adventures on:

© COPYRIGHT 2018 FRONT RUNNER VEHICLE OUTFITTERS