START HERE!

READ ME FIRST

Don't be a hero and muscle through this installation without reading these fitting instructions first! Improper installation of this gear may void certain aspects of your warranty.

Before you begin, take a moment and open all your Front Runner rack kit boxes and gather the assembly instructions for the various components.

A complete kit will contain:

1. A Front Runner Mounting System specific to your vehicle
2. A Front Runner Rack Tray or Load Bar Slats

This document will guide you through the assembly of the mounting system and assist you in fitting the roof rack tray or load bars to your specific vehicle.

Please refer to the next page for a list of all the components, quantities and tools required.

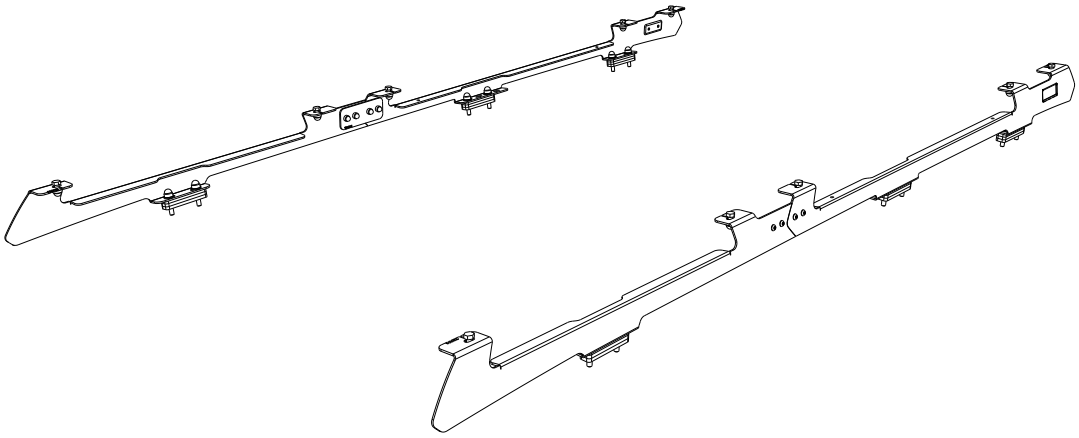

IMPORTANT WARNING! ⚠

IT IS CRITICAL THAT ALL FRONT RUNNER PRODUCTS BE PROPERLY AND SECURELY ASSEMBLED AND ATTACHED TO YOUR VEHICLE. IMPROPER ATTACHMENT COULD RESULT IN AN AUTOMOBILE ACCIDENT, AND COULD CAUSE SERIOUS BODILY INJURY OR DEATH. YOU ARE RESPONSIBLE FOR ASSEMBLING AND SECURING ALL FRONT RUNNER PRODUCTS TO YOUR VEHICLE, CHECKING THE ATTACHMENTS PRIOR TO USE, AND PERIODICALLY INSPECTING THE PRODUCTS FOR ADJUSTMENT, WEAR AND DAMAGE. THEREFORE, YOU MUST READ AND UNDERSTAND ALL OF THE INSTRUCTIONS AND PRECAUTIONS SUPPLIED WITH YOUR FRONT RUNNER PRODUCT PRIOR TO INSTALLATION OR USE. IF YOU DO NOT UNDERSTAND ALL OF THE INSTRUCTIONS AND CAUTIONS, OR IF YOU HAVE NO MECHANICAL EXPERIENCE AND ARE NOT THOROUGHLY FAMILIAR WITH THE INSTALLATION PROCEDURES, YOU SHOULD HAVE THE PRODUCT INSTALLED BY A PROFESSIONAL INSTALLER OR OTHER QUALIFIED PERSONNEL.

NOTE: Front Runner will not be responsible for any damage caused by the failure to install the product according to these instructions.

Please call us if you have any questions about the installation of this product.

 © 2022 FRONT RUNNER VEHICLE OUTFITTERS

1 GET ORGANIZED

IN THE BOX

1	2 X	Front Foot Rail 1LH + 1RH
2	2 X	Rear Foot Rail 1LH + 1RH
3	12 X	Plastic Spacer
4	12 X	M8 x 45 Hex Head Bolt
5	12 X	M8 Spring Washer
6	22 X	M8 Nut Cap
7	12 X	M8 x 19 x 2 Flat Washer
8	10 X	M8 x 20 Hex Head Bolt
9	8 X	M6 Nut Cap
10	8 X	M6 Nyloc Nut
11	10 X	M8 Nyloc Nut
12	10 X	M8 Flat Washer
13	8 X	M6 x 16 Button Head Bolt
14	2 X	Joiner Plate

TOOLS NEEDED

FIGURE 1.1

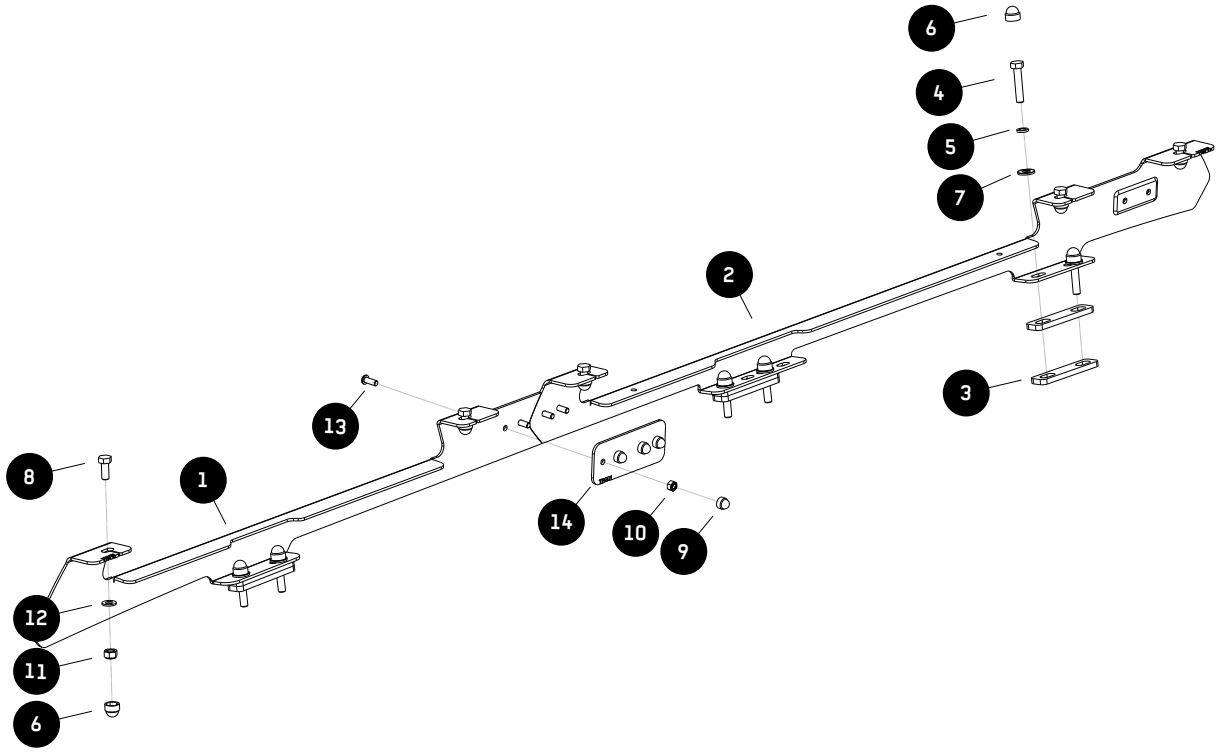

 © 2022 FRONT RUNNER VEHICLE OUTFITTERS

2 FIT AND SECURE

2.1

Remove the OEM rails from the left and right side of the vehicle.

2.2

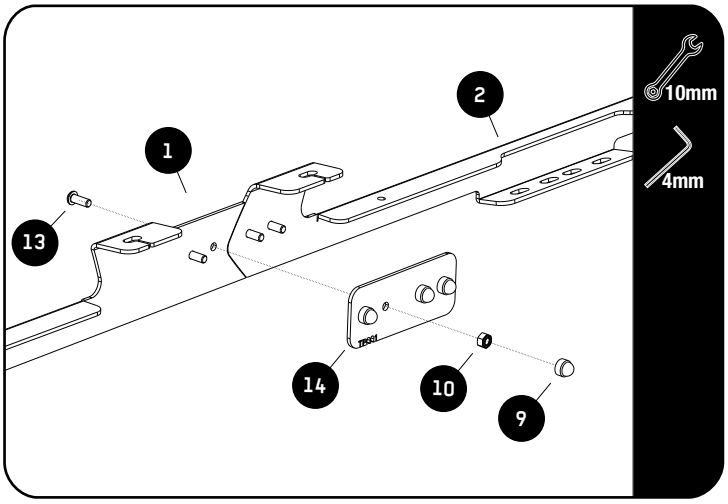

Assemble the Front and Rear Foot Rails (Items 1 & 2) using the Joiner Plate (Item 14) and M6 x 12 Button Head Bolts and M6 Nyloc Nuts (Items 10 & 13) as shown.

Finish off by placing M6 Nut Caps (Item 9) on the Nyloc Nuts.

2.3

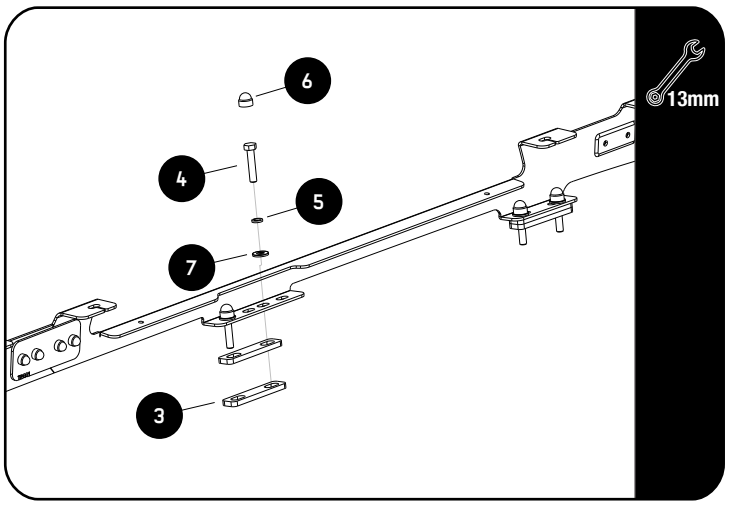

Secure the Foot Rails to the vehicle using M8 x 40 Hex Head Bolts, M8 Spring Washers, M8 x 19 x 2 Flat Washers and Plastic Spacers (Items 3, 4, 5 & 7) as shown.

Finish off by placing M8 Nut Caps (Item 6) on the Nyloc Nuts.

© 2022 FRONT RUNNER VEHICLE OUTFITTERS

3 FIT AND SECURE

3.1 Refer to RRSTUNI when assembling your Slimline II Tray.

3.2

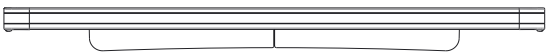

Make sure that the wind deflector is installed before you proceed to the next step.

3.3

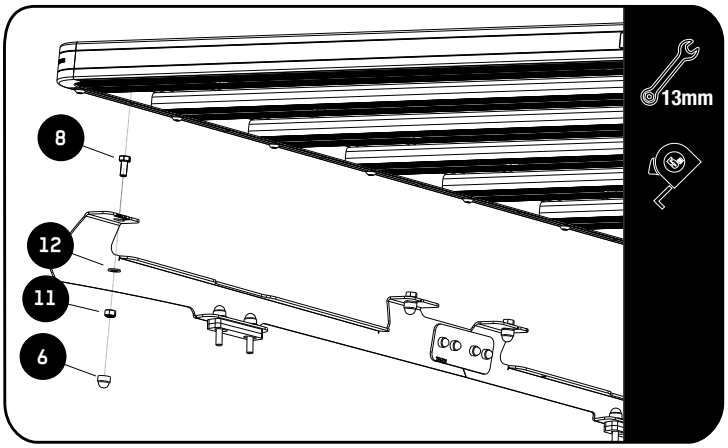

Fit your roof rack to the Foot Rails using M8 x 20 Hex Bolts, M8 x 16 x 1.6SS Flat Washers and M8 Nyloc Nuts (Items 8, 11 & 12) as shown.

3.4 Center the rack and tighten fully. Use M8 Nut Caps (Items 6) to finish off the nuts.

© 2022 FRONT RUNNER VEHICLE OUTFITTERS

4 COMPLETION

4.1 Congratulations! You did it. Take a step back and admire your work!

5 INSTALL OTHER VEHICLE AND RACK ACCESSORIES

Now's the time to visit your favorite Front Runner dealer in person or online.

IMPORTANT!

FRONT RUNNER RACK KITS OFTEN HAVE A HIGHER LOAD RATING THAN THE VEHICLES THEY ARE MOUNTED TO. PLEASE REFER TO YOUR SPECIFIC VEHICLE MANUFACTURER FOR A RECOMMENDED ROOF RATING. FRONT RUNNER CANNOT BE RESPONSIBLE FOR IMPROPER LOADING BEYOND THE VEHICLE MANUFACTURER'S STATED LOAD CAPACITY.

Be sure to tag us. We love to see our gear in action! #FrontRunnerOutfitters #BornToRoam

Share your adventures on:

© 2022 FRONT RUNNER VEHICLE OUTFITTERS