START HERE!

READ ME FIRST

Don't be a hero and muscle through this installation without reading these fitting instructions first! Improper installation of this gear may void certain aspects of your warranty.

Before you begin, take a moment and open all your Front Runner rack kit boxes and gather the assembly instructions for the various components.

A complete kit will contain:

1. A Front Runner Mounting System specific to your vehicle
2. A Front Runner Rack Tray or Load Bar Slats

This document will guide you through the assembly of the mounting system and assist you in fitting the roof rack tray or load bars to your specific vehicle.

Please refer to the next page for a list of all the components, quantities and tools required.

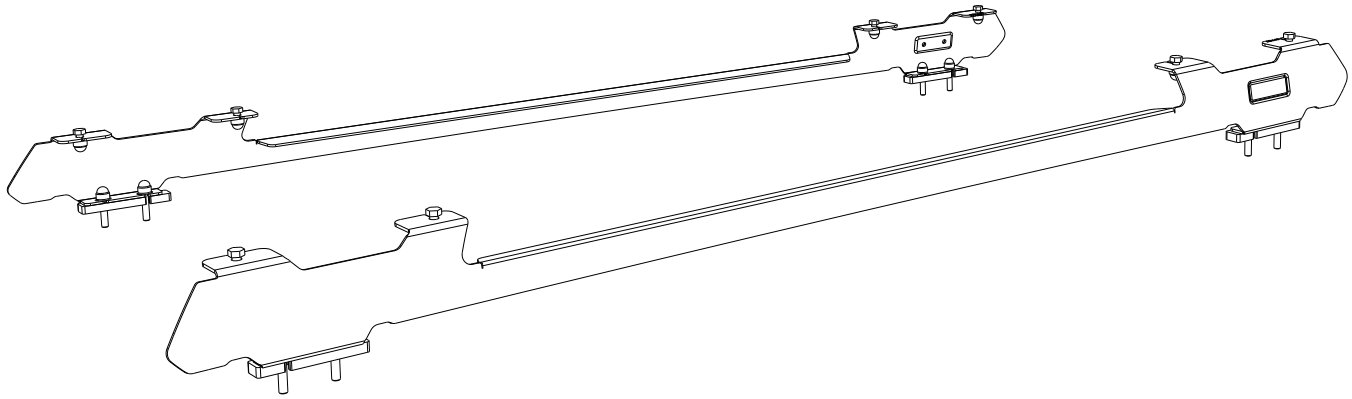

IMPORTANT WARNING! ⚠

IT IS CRITICAL THAT ALL FRONT RUNNER PRODUCTS BE PROPERLY AND SECURELY ASSEMBLED AND ATTACHED TO YOUR VEHICLE. IMPROPER ATTACHMENT COULD RESULT IN AN AUTOMOBILE ACCIDENT, AND COULD CAUSE SERIOUS BODILY INJURY OR DEATH. YOU ARE RESPONSIBLE FOR ASSEMBLING AND SECURING ALL FRONT RUNNER PRODUCTS TO YOUR VEHICLE, CHECKING THE ATTACHMENTS PRIOR TO USE, AND PERIODICALLY INSPECTING THE PRODUCTS FOR ADJUSTMENT, WEAR AND DAMAGE. THEREFORE, YOU MUST READ AND UNDERSTAND ALL OF THE INSTRUCTIONS AND PRECAUTIONS SUPPLIED WITH YOUR FRONT RUNNER PRODUCT PRIOR TO INSTALLATION OR USE. IF YOU DO NOT UNDERSTAND ALL OF THE INSTRUCTIONS AND CAUTIONS, OR IF YOU HAVE NO MECHANICAL EXPERIENCE AND ARE NOT THOROUGHLY FAMILIAR WITH THE INSTALLATION PROCEDURES, YOU SHOULD HAVE THE PRODUCT INSTALLED BY A PROFESSIONAL INSTALLER OR OTHER QUALIFIED PERSONNEL.

NOTE: Front Runner will not be responsible for any damage caused by the failure to install the product according to these instructions.

Please call us if you have any questions about the installation of this product.

 © 2019 FRONT RUNNER VEHICLE OUTFITTERS

1 GET ORGANIZED

IN THE BOX

1	2 X	Foot Rail 1LH + 1RH
2	4 X	Spacer
3	16 X	M8 x 16 x 1.6SS Flat Washer
4	8 X	M8 SS Spring Washer
5	8 X	M8 x 40 Hex Bolt
6	16 X	M8 Nut Cap
7	8 X	M8 Nyloc Nut
8	8 X	M8 x 20 Hex Bolt

TOOLS NEEDED

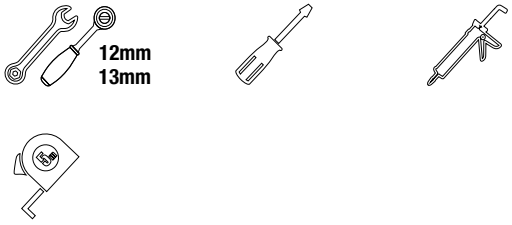

FIGURE 1.1

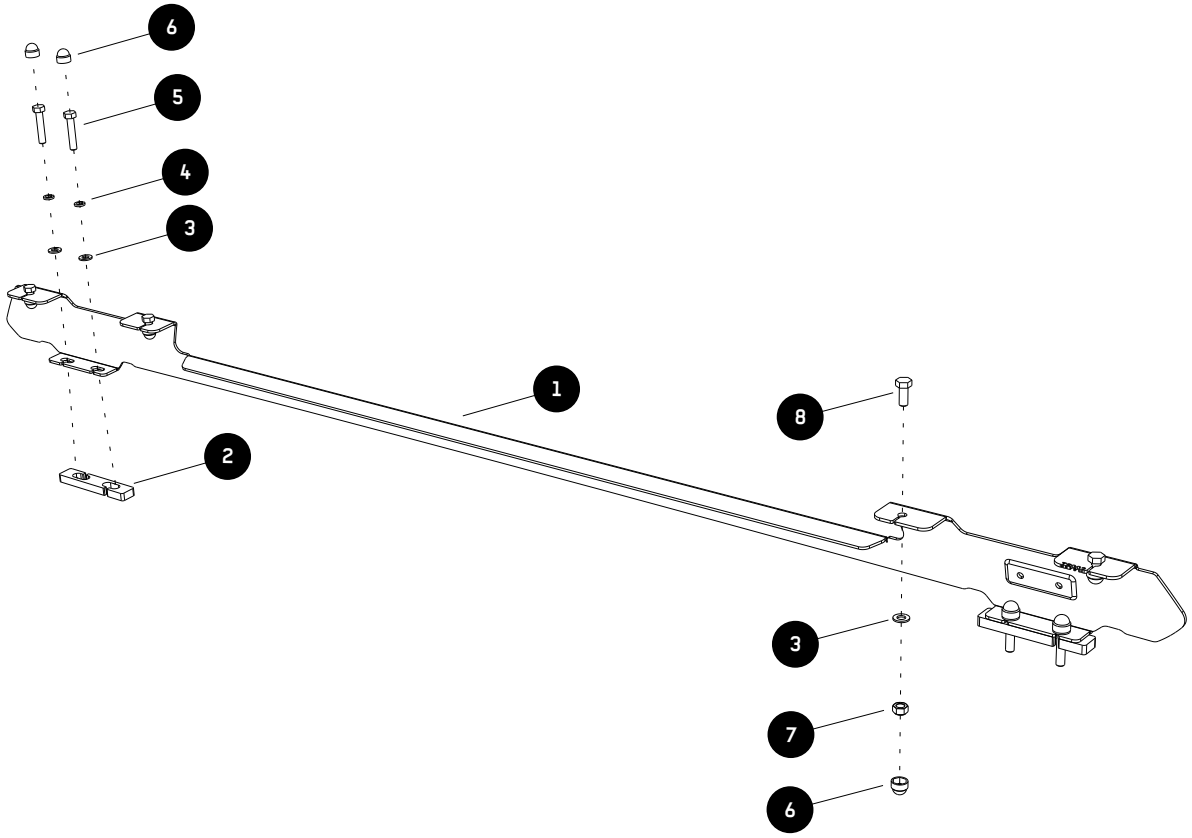

 © 2019 FRONT RUNNER VEHICLE OUTFITTERS

2 FIT AND SECURE

2.1

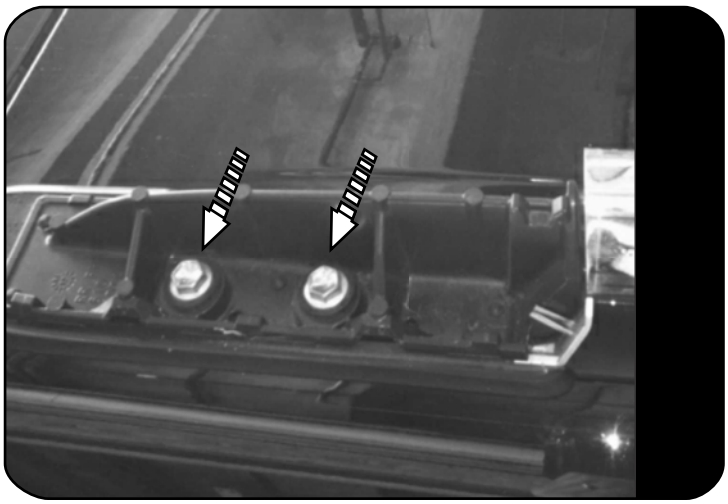

Using a flat screwdriver, remove the front and rear end covers from the vehicle's roof rails. Loosen the two bolts found underneath each cover and remove the roof rails from the vehicle.

2.2

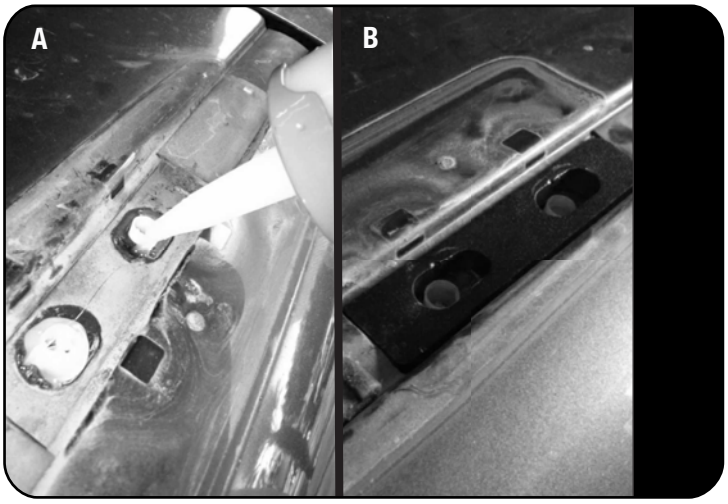

Clean the area around the threaded holes in the vehicle's roof using a rag and methylated spirits or denatured alcohol. Place some silicone around each threaded hole in the vehicle's roof and the two cut-outs in each of the spacers (Item 2) shown in picture A.

Position the Spacers into the vehicle's gutters, aligning the cut outs in the Spacers with the threaded holes in the vehicle's roof as shown in picture B.

2.3

Place the Foot Rails (Item 1) onto the vehicle's roof, aligning the mounting holes in the bottom of the Foot Rails with the mounting points on the vehicle.

The Product Sticker must go to the rear of the vehicle and must be facing outward.

Push the Foot Rail as far back as possible before securing it using the M8 x 40 Hex Bolts, M8 SS Spring Wqshers ans M8 x 16 x 1.6SS Flat Washers (Items 3, 4 & 5).

Place M8 Nut Caps (Item 6) over each bolt head once all the bolts are fully tightened.

© 2019 FRONT RUNNER VEHICLE OUTFITTERS

3 FIT AND SECURE

3.1

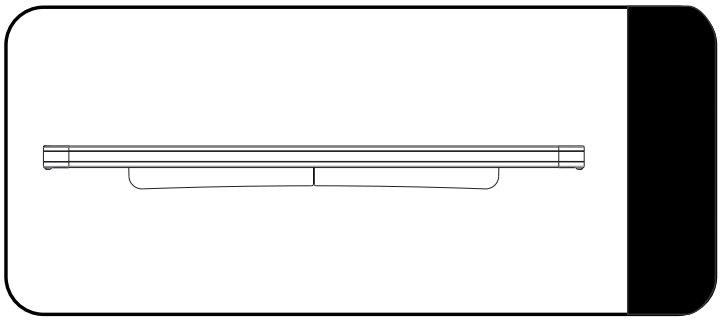

Make sure that the wind deflector is installed before you proceed to the next step.

3.2

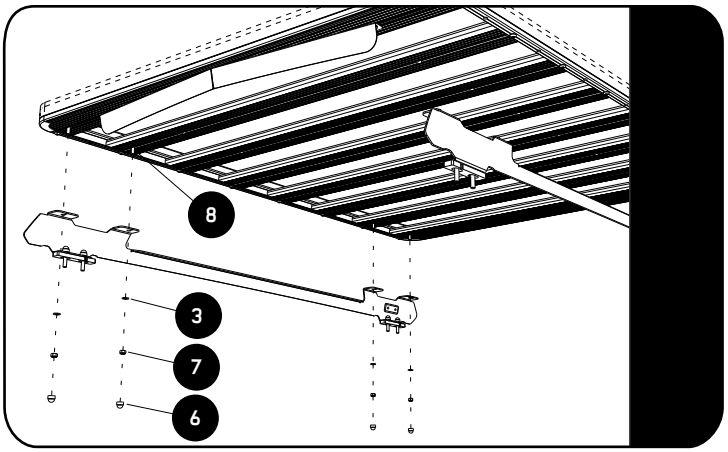

Fit your roof rack to the Foot Rails using M8 x 20 Hex Bolts, M8 x 16 x 1.6SS Flat Washers and M8 Nyloc Nuts (Items 3, 7 & 8).

3.3

Center the rack and tighten fully. Use M8 Nut Caps (Item 6) to finish off the nuts.

 © 2019 FRONT RUNNER VEHICLE OUTFITTERS

4 COMPLETION

4.1 Congratulations! You did it. Take a step back and admire your work!

5 INSTALL OTHER VEHICLE AND RACK ACCESSORIES

Now's the time to visit your favorite Front Runner Dealer in person or online.

IMPORTANT!

FRONT RUNNER RACK KITS OFTEN HAVE A HIGHER LOAD RATING THAN THE VEHICLES THEY ARE MOUNTED TO. PLEASE REFER TO YOUR SPECIFIC VEHICLE MANUFACTURER FOR A RECOMMENDED ROOF RATING. FRONT RUNNER CANNOT BE RESPONSIBLE FOR IMPROPER LOADING BEYOND THE VEHICLE MANUFACTURER'S STATED LOAD CAPACITY.

Be sure to tag us. We love to see our gear in action! #FrontRunnerOutfitters #BornToRoam

Share your adventures on:

© 2019 FRONT RUNNER VEHICLE OUTFITTERS