START HERE!

READ ME FIRST

Don't be a hero and muscle through this installation without reading these fitting instructions first! Improper installation of this gear may void certain aspects of your warranty.

Before you begin, take a moment and open all your Front Runner rack kit boxes and gather the assembly instructions for the various components.

A complete kit will contain:

1. A Front Runner Mounting System specific to your vehicle
2. A Front Runner Rack Tray or Load Bar Slats

This document will guide you through the assembly of the mounting system and assist you in fitting the roof rack tray or load bars to your specific vehicle.

Please refer to the next page for a list of all the components, quantities and tools required.

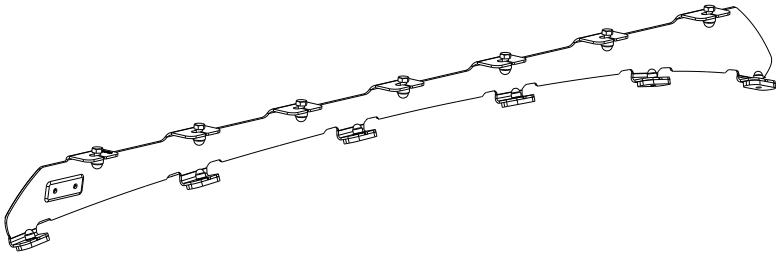

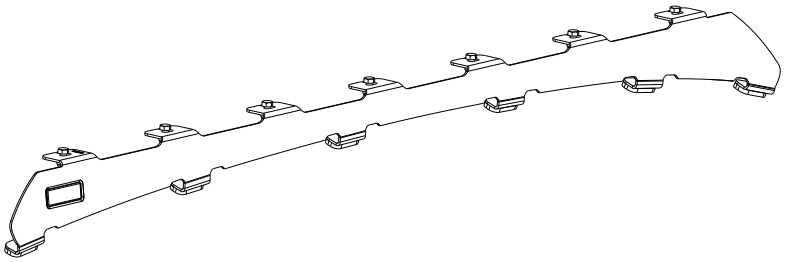

IMPORTANT WARNING! ⚠

IT IS CRITICAL THAT ALL FRONT RUNNER PRODUCTS BE PROPERLY AND SECURELY ASSEMBLED AND ATTACHED TO YOUR VEHICLE. IMPROPER ATTACHMENT COULD RESULT IN AN AUTOMOBILE ACCIDENT, AND COULD CAUSE SERIOUS BODILY INJURY OR DEATH. YOU ARE RESPONSIBLE FOR ASSEMBLING AND SECURING ALL FRONT RUNNER PRODUCTS TO YOUR VEHICLE, CHECKING THE ATTACHMENTS PRIOR TO USE, AND PERIODICALLY INSPECTING THE PRODUCTS FOR ADJUSTMENT, WEAR AND DAMAGE. THEREFORE, YOU MUST READ AND UNDERSTAND ALL OF THE INSTRUCTIONS AND PRECAUTIONS SUPPLIED WITH YOUR FRONT RUNNER PRODUCT PRIOR TO INSTALLATION OR USE. IF YOU DO NOT UNDERSTAND ALL OF THE INSTRUCTIONS AND CAUTIONS, OR IF YOU HAVE NO MECHANICAL EXPERIENCE AND ARE NOT THOROUGHLY FAMILIAR WITH THE INSTALLATION PROCEDURES, YOU SHOULD HAVE THE PRODUCT INSTALLED BY A PROFESSIONAL INSTALLER OR OTHER QUALIFIED PERSONNEL.

NOTE: Front Runner will not be responsible for any damage caused by the failure to install the product according to these instructions.

Please call us if you have any questions about the installation of this product.

 © 2023 FRONT RUNNER VEHICLE OUTFITTERS

1 GET ORGANIZED

IN THE BOX

1	2 X	Foot Rails (1 LH & 1 RH)
2	14 X	M8 x 20 Hex Bolt
3	14 X	M8 x 16 x 1.6 Flat Washer
4	14 X	M8 Nyloc Nut
5	14 X	M8 Nut Cap
6	12 X	6mm Spacer
7	12 X	M6 x 12 x 1 Flat Washer
8	12 X	M6 Nyloc Nut
9	12 X	M6 Nut Cap

TOOLS NEEDED

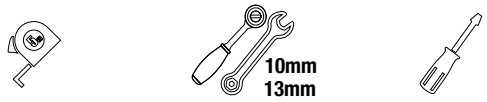

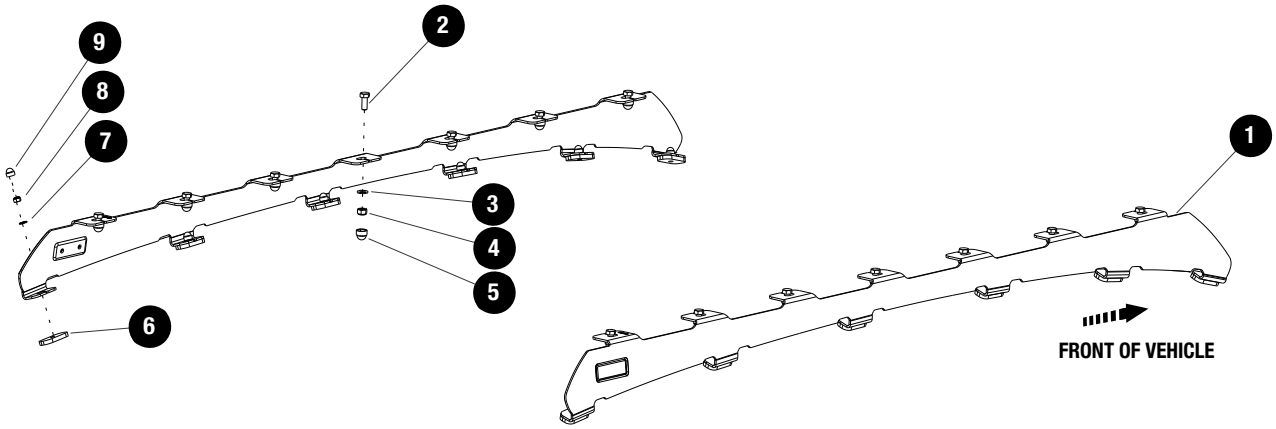

 © 2023 FRONT RUNNER VEHICLE OUTFITTERS

2 FIT AND SECURE

2.1

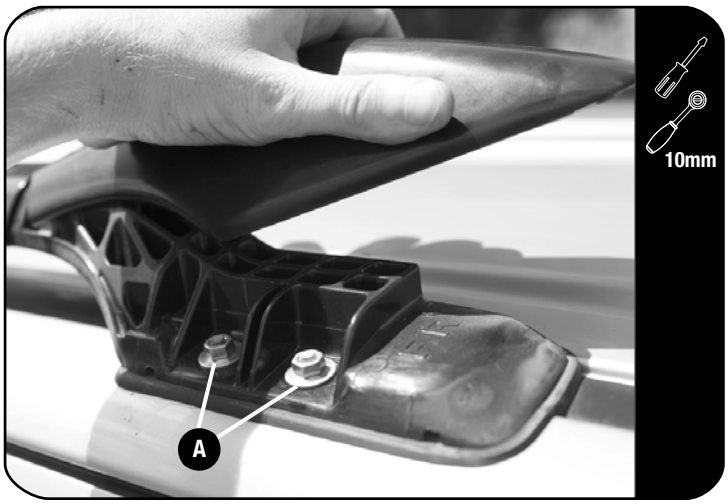

Starting at the front of the windscreen as shown, use a suitable panel tool to remove the OEM Roof Rail Cover.

Remove the OEM Nuts (A) and take off the OEM Roof Rails, to reveal the OEM Studs.

2.2

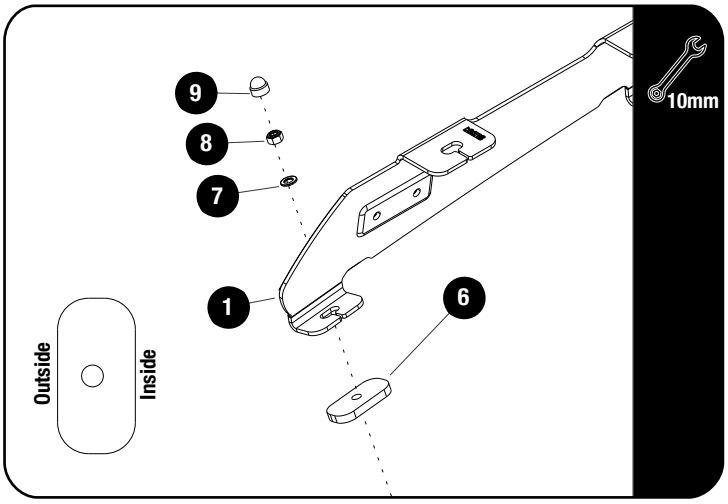

Thoroughly clean each stud and place a 6mm Spacer (Item 6) on each stud, as shown.

Take note of the orientation of the Spacer, the hole should be offset towards the outside of the vehicle.

Loosely assemble each Foot Rail (Item 1) using a M6 x 12 x 1 Flat Washer and a M6 Nyloc Nut (Items 7 & 8)

Tightening Torque:

M6 : 8-10Nm / 5.9 ft lb - 7.38 ft lb

Tighten all fasteners and place M6 Nut Caps (Item 9) over all M6 Nyloc Nuts.

© 2023 FRONT RUNNER VEHICLE OUTFITTERS

3 FIT AND SECURE

3.1

Refer to RRSTUNI when assembling your Slimline II Tray.

3.2

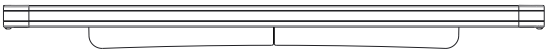

Make sure that the wind deflector is installed before you proceed to the next step.

3.3

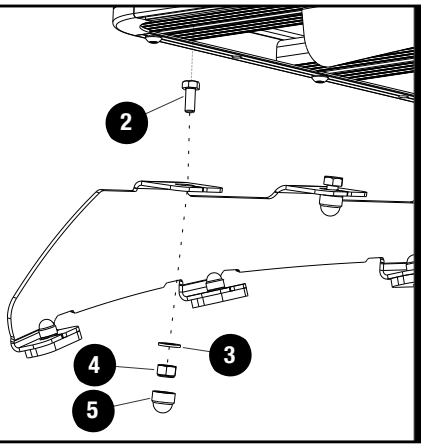

13mm

Fit your roof rack to the Foot Rails using M8 x 20 Hex Bolts, M8 x 16 x 1.6 Flat Washers and M8 Nyloc Nuts (Items 2, 3 & 4) as shown.

Tightening Torque:

M8 : 15-20Nm / 11.06 ft lb - 14.75 ft lb

3.4

Center the rack and tighten fully. Use M8 Nut Caps (Items 5) to finish off the nuts.

4 FINISH

Congratulations! You did it. Take a step back and admire your work!

5 INSTALL OTHER VEHICLE AND RACK ACCESSORIES

Now's the time to visit your favorite Front Runner dealer in person or online.

IMPORTANT!

FRONT RUNNER RACK KITS OFTEN HAVE A HIGHER LOAD RATING THAN THE VEHICLES THEY ARE MOUNTED TO. PLEASE REFER TO YOUR SPECIFIC VEHICLE MANUFACTURER FOR A RECOMMENDED ROOF RATING. FRONT RUNNER CANNOT BE RESPONSIBLE FOR IMPROPER LOADING BEYOND THE VEHICLE MANUFACTURER'S STATED LOAD CAPACITY.

Be sure to tag us. We love to see our gear in action! #FrontRunnerOutfitters #BornToRoam

Share your adventures on:

© 2023 FRONT RUNNER VEHICLE OUTFITTERS