FRONT RUNNER

PORSCHE 911 (997 MODEL) SLIMLINE II ROOF RACK

ENG

FAPN001

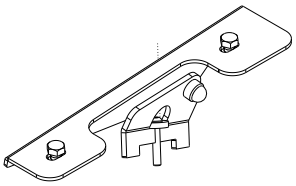

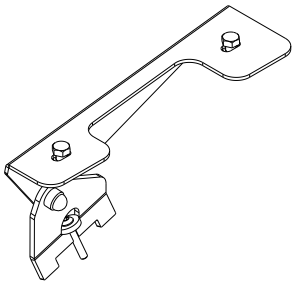

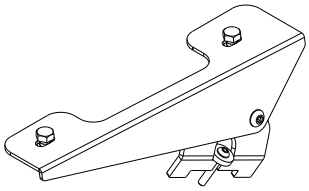

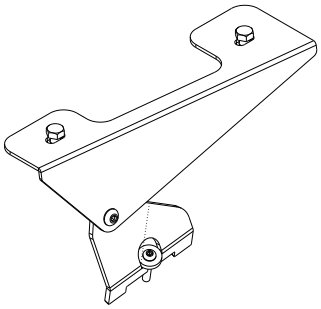

READ ME !

Thank you for purchasing a Front Runner Porsche 911 (997 Model) Slimline II Roof Rack.

Before you start, take a moment to familiarize yourself with the Fitting Instructions and the included components.

Refer to Page 2 for a list of all the components, quantities and tools required.

IMPORTANT WARNING!

IT IS CRITICAL THAT ALL FRONT RUNNER PRODUCTS BE PROPERLY AND SECURELY ASSEMBLED AND ATTACHED TO YOUR VEHICLE. IMPROPER ATTACHMENT COULD RESULT IN AN AUTOMOBILE ACCIDENT, AND COULD CAUSE SERIOUS BODILY INJURY OR DEATH. YOU ARE RESPONSIBLE FOR ASSEMBLING AND SECURING ALL FRONT RUNNER PRODUCTS TO YOUR VEHICLE, CHECKING THE ATTACHMENTS PRIOR TO USE, AND PERIODICALLY INSPECTING THE PRODUCTS FOR ADJUSTMENT, WEAR AND DAMAGE. THEREFORE, YOU MUST READ AND UNDERSTAND ALL OF THE INSTRUCTIONS AND PRECAUTIONS SUPPLIED WITH YOUR FRONT RUNNER PRODUCT PRIOR TO INSTALLATION OR USE. IF YOU DO NOT UNDERSTAND ALL OF THE INSTRUCTIONS AND CAUTIONS, OR IF YOU HAVE NO MECHANICAL EXPERIENCE AND ARE NOT THOROUGHLY FAMILIAR WITH THE INSTALLATION PROCEDURES, YOU SHOULD HAVE THE PRODUCT INSTALLED BY A PROFESSIONAL INSTALLER OR OTHER QUALIFIED PERSONNEL.

NOTE: Front Runner will not be responsible for any damage caused by the failure to install the product according to these instructions.

Please call us if you have any questions about the installation of this product.

 © 2023 FRONT RUNNER VEHICLE OUTFITTERS

1 GET ORGANIZED

IN THE BOX

1	2 X	Front Top Bracket
2	2 X	Rear Top Bracket
3	2 X	Front Foot Assembly
4	2 X	Rear Foot Assembly
5	4 X	M6 x 35 Button Head Screw
6	8 X	M8 x 16 Hex Bolt
7	12 X	M8 Nyloc Nut
8	12 X	M8 Nut Cap
9	4 X	M8 x 20 Button Head Screw

TOOLS NEEDED

FIGURE 1.1

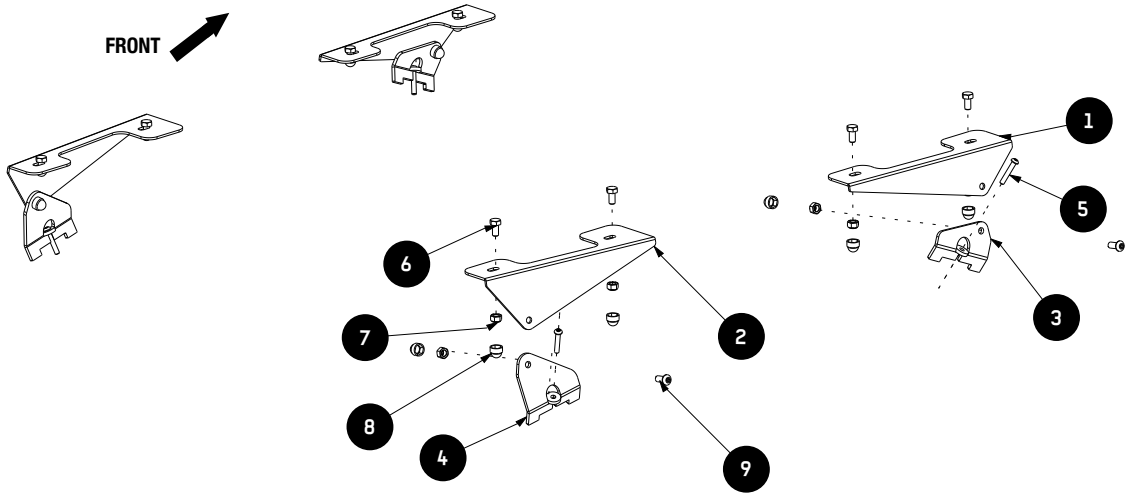

 © 2023 FRONT RUNNER VEHICLE OUTFITTERS

2 FIT AND SECURE

2.1

Start by removing the 4 Cap screws using a Flat Screw driver as shown.

2.2

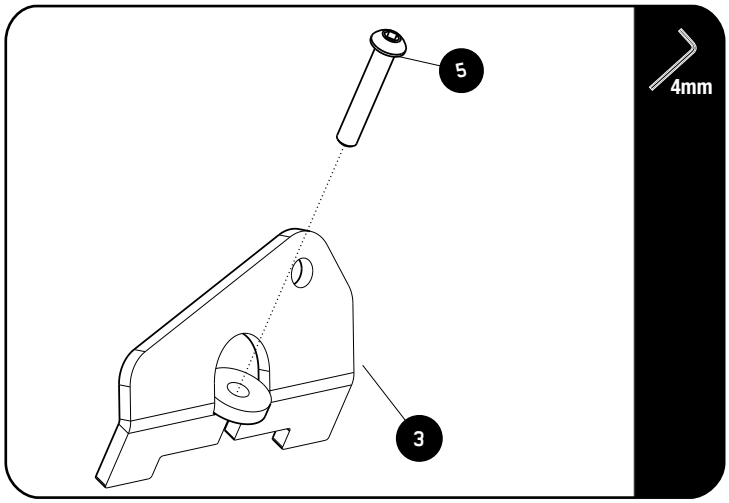

Place the Front Foot Assembly (Item 3) into the ditch where the Cap screw was removed and bolt the Front Foot Assembly using the M6x35 Button Head (Item 5) Screw as shown.

Do this both LH and RH side.

Fully Tighten the M6x35 Button Head Screw.

<u>Tightening Torque</u>:

M6 : 8-10Nm / 5.9 ft lb - 7.38 ft lb

2.3

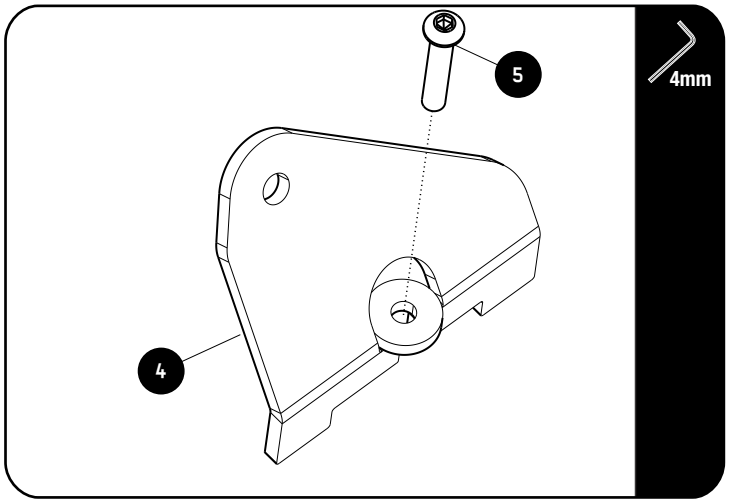

Place the Rear Foot Assembly (Item 4) into the ditch where the Cap screw was removed and bolt the Front Foot Assembly using the M6x35 Button Head (Item 5) Screw as shown.

Do this both LH and RH side.

Fully Tighten the M6x35 Button Head Screw.

<u>Tightening Torque</u>:

M6 : 8-10Nm / 5.9 ft lb - 7.38 ft lb

© 2023 FRONT RUNNER VEHICLE OUTFITTERS

2 FIT AND SECURE

2.4

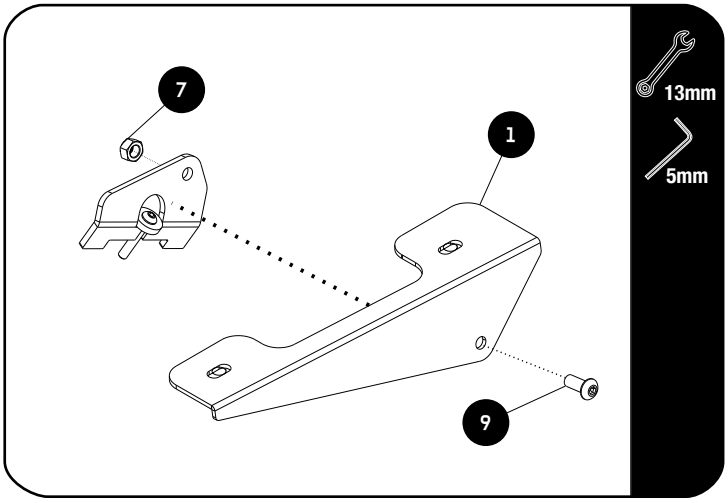

Loosely assemble the Front Top Bracket (Item 1) to the Front Foot Assembly fitted in 2.2 using the M8 x 20 Button heas screw and M8 Nyloc Nut (Item 9 & 7).

Do the both LH and RH side.

DO NOT FULLY TIGHTEN.

2.5

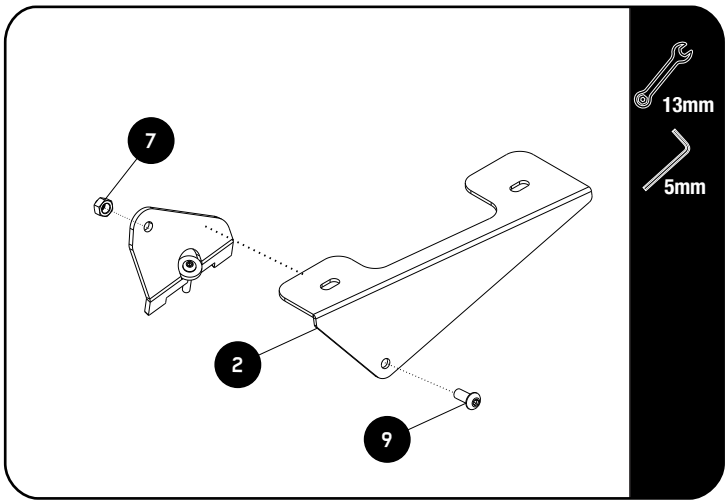

Loosely assemble the Rear Top Bracket (Item 2) to the Front Foot Assembly fitted in 2.3 using the M8 x 20 Button heas screw and M8 Nyloc Nut (Item 9 & 7).

Do the both LH and RH side.

DO NOT FULLY TIGHTEN.

2.6

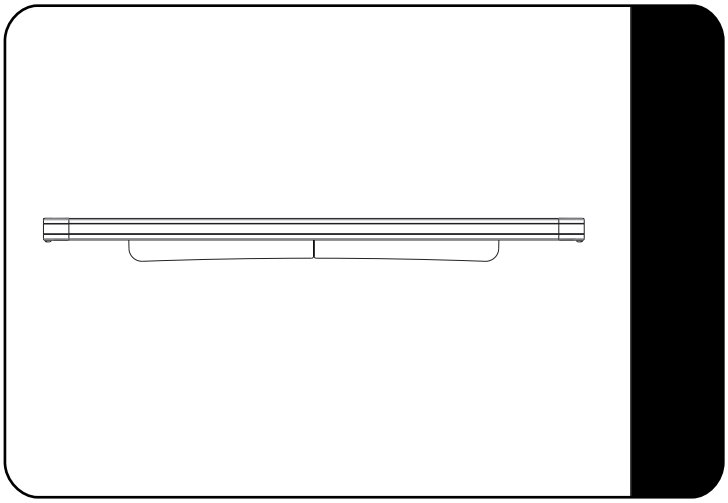

Make sure that the wind deflector is installed before you proceed to the next step

© 2023 FRONT RUNNER VEHICLE OUTFITTERS

2 FIT AND SECURE

2.7

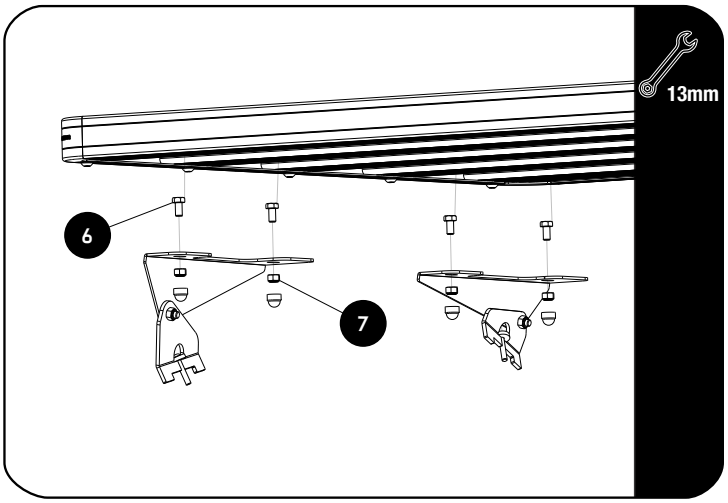

Fit your roof rack to the Foot Rails using M8 x 16 Hex Bolts, and M8 Nyloc Nuts (Items 6 & 7) as shown.

DO NOT FULLY TIGHTEN.

2.8

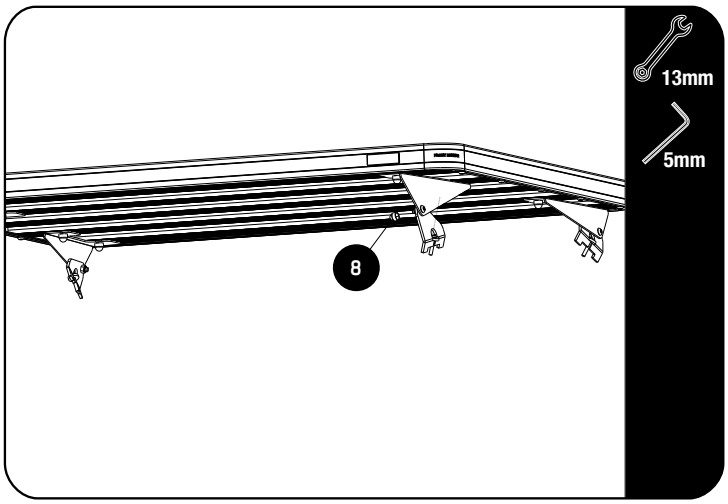

Fully Tighten The M8 x 20 Button head screws fitted in 2.4 & 2.5 and place the M8 Nut cap (Item 8) onto the M8 Nyloc Nut.

Tightening Torque:

M8 : 15-20Nm / 11.06 ft lb - 14.75 ft lb

2.9

Center the rack and tighten fully. Use M8 Nut Caps (Items 8) to finish off the nuts.

3 FINISH

Congratulations! You did it. Take a step back and admire your work!

4 INSTALL OTHER VEHICLE AND RACK ACCESSORIES

Now's the time to visit your favorite Front Runner Dealer in person or online.

Be sure to tag us. We love to see our gear in action! #FrontRunnerOutfitters #BornToRoam

Share your adventures on:

© 2023 FRONT RUNNER VEHICLE OUTFITTERS