START HERE!

READ ME FIRST

Don't be a hero and muscle through this installation without reading these fitting instructions first! Improper installation of this gear may void certain aspects of your warranty.

Before you begin, take a moment and open all your Front Runner rack kit boxes and gather the assembly instructions for the various components.

A complete kit will contain:

1. A Front Runner Mounting System specific to your vehicle
2. A Front Runner Rack Tray or Load Bar Slats

This document will guide you through the assembly of the mounting system and assist you in fitting the roof rack tray or load bars to your specific vehicle.

Please refer to the next page for a list of all the components, quantities and tools required.

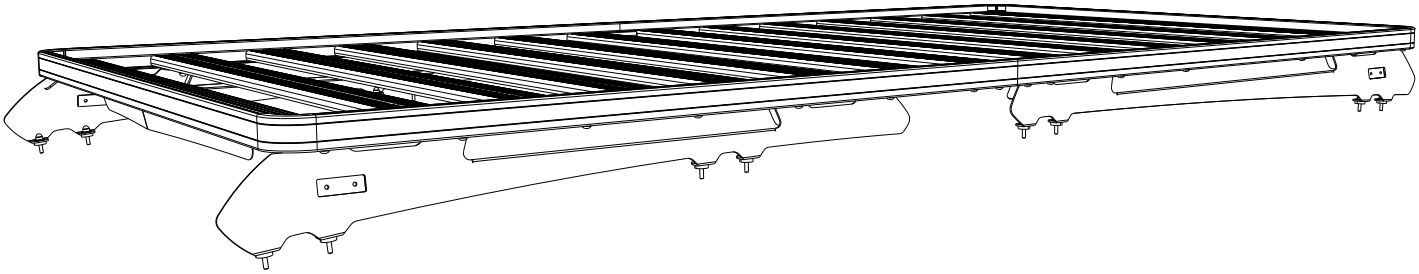

IMPORTANT WARNING! ⚠

IT IS CRITICAL THAT ALL FRONT RUNNER PRODUCTS BE PROPERLY AND SECURELY ASSEMBLED AND ATTACHED TO YOUR VEHICLE. IMPROPER ATTACHMENT COULD RESULT IN AN AUTOMOBILE ACCIDENT, AND COULD CAUSE SERIOUS BODILY INJURY OR DEATH. YOU ARE RESPONSIBLE FOR ASSEMBLING AND SECURING ALL FRONT RUNNER PRODUCTS TO YOUR VEHICLE, CHECKING THE ATTACHMENTS PRIOR TO USE, AND PERIODICALLY INSPECTING THE PRODUCTS FOR ADJUSTMENT, WEAR AND DAMAGE. THEREFORE, YOU MUST READ AND UNDERSTAND ALL OF THE INSTRUCTIONS AND PRECAUTIONS SUPPLIED WITH YOUR FRONT RUNNER PRODUCT PRIOR TO INSTALLATION OR USE. IF YOU DO NOT UNDERSTAND ALL OF THE INSTRUCTIONS AND CAUTIONS, OR IF YOU HAVE NO MECHANICAL EXPERIENCE AND ARE NOT THOROUGHLY FAMILIAR WITH THE INSTALLATION PROCEDURES, YOU SHOULD HAVE THE PRODUCT INSTALLED BY A PROFESSIONAL INSTALLER OR OTHER QUALIFIED PERSONNEL.

NOTE: Front Runner will not be responsible for any damage caused by the failure to install the product according to these instructions.

Please call us if you have any questions about the installation of this product.

 © 2020 FRONT RUNNER VEHICLE OUTFITTERS

1 GET ORGANIZED

IN THE BOX

1	2 X	Foot Rail Front - 1LH + 1RH
2	2 X	Foot Rail Rear - 1LH + 1RH
3	16 X	Spacer
4	16 X	M6 x 19 x 1SS Flat Washer
5	16 X	M6 SS Spring Washer
6	16 X	M6 x 30 Hex Bolt
7	16 X	M6 Nut Cap
8	16 X	M8 x 20 Hex Bolt
9	16 X	M8 x 16 x 1.6SS Flat Washer
10	16 X	M8 Nyloc Nut
11	16 X	M8 Nut Cap
12	16 X	M6 x 20 Hex Bolt

TOOLS NEEDED

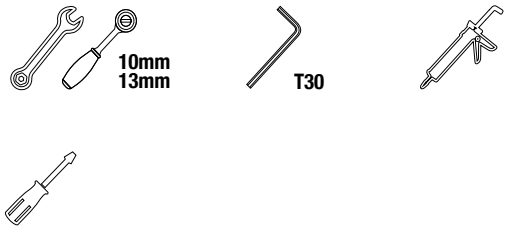

FIGURE 1.1

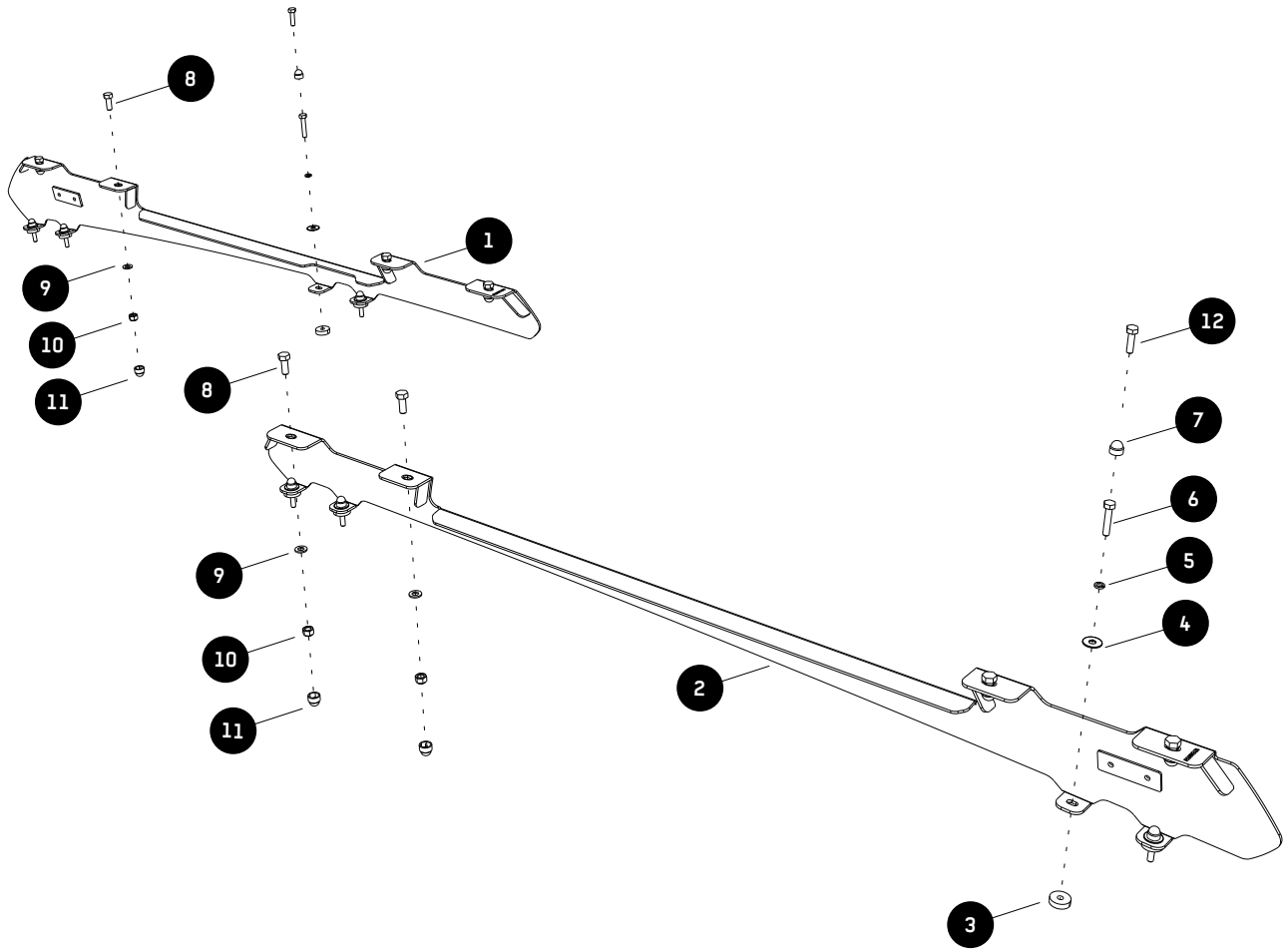

 © 2020 FRONT RUNNER VEHICLE OUTFITTERS

2 FIT AND SECURE

2.1

Before you start with the fitment of the Foot Rails (Items 1 & 2), you need to remove the factory roof rails.

Do this by unclipping and removing the front, middle and rear plastic caps of the roof rail.

Now loosen the two bolts in the front, one bolt in the middle and two bolts at the rear of the roof rail.

After you have removed all the bolts, remove the roof rails from the vehicle.

2.2

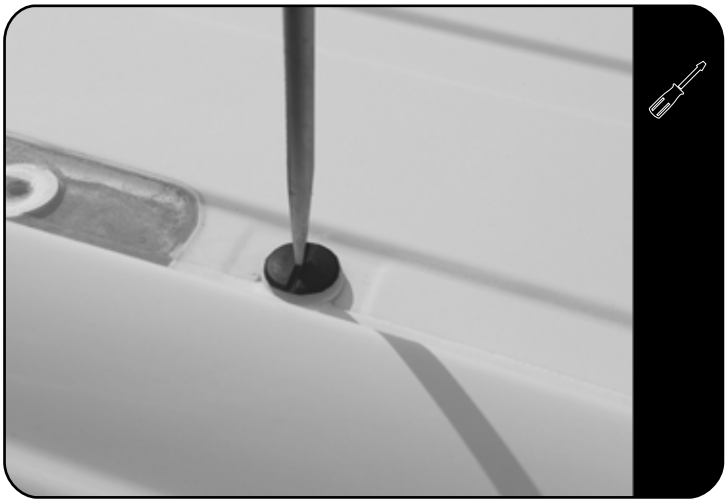

In the middle of the ditch you will see a sealing plug, this will also need to be removed as shown.

2.3

NOTE: For fitment of Full Rack.

Further forward in the gutter you will find two more plugs that needs to be removed.

© 2020 FRONT RUNNER VEHICLE OUTFITTERS

2 FIT AND SECURE

2.4

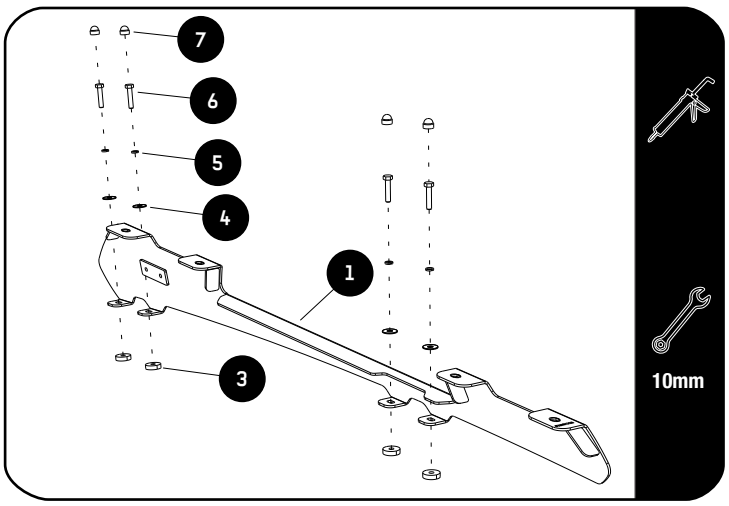

NOTE: For fitment of a Full Rack do Step 2.4 and 2.5. For fitment of a Half Rack proceed to Step 2.5.

Place a bead of silicone around each of the M6 x 30 / M6 x 20 Hex Bolt threads (Item 6 / 12).

To fit the Front Foot Rail (Item 1), place the Spacers (Item 3) over the holes where you removed the bolts and plugs, followed by the Foot Rail (Item 1).

Secure the Foot Rail using the M6 x 30 Hex Bolts, M6 SS Spring Washers and M6 x 19 x 1SS Flat Washers (Items 4, 5 & 6 / 12) and fully tighten.

Do this on both the left and right side of the vehicle.

Finish by placing M6 Nut Caps (Item 7) on the M6 Bolt heads.

2.5

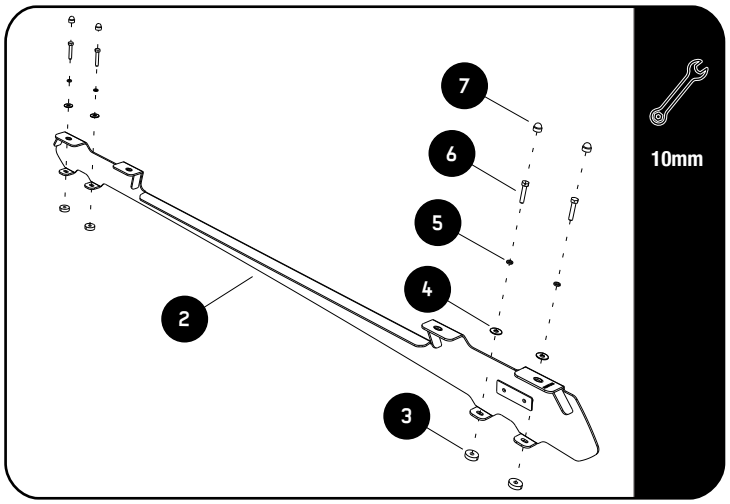

To fit the rear Foot Rail (Item 2), place the Spacers (Item 3) over the holes where you removed the bolts and plugs, followed by the Foot Rail (Item 2).

Secure the Foot Rail using the M6 x 30/M6 x 20 Hex Bolts with silicone on the threads, M6 SS Spring Washers and M6 x 19 x 1SS Flat Washers (Items 4, 5 & 6 / 12) and fully tighten.

Do this on both the left and right side of the vehicle.

Finish by placing M6 Nut Caps (Item 7) on the M6 Bolt heads.

© 2020 FRONT RUNNER VEHICLE OUTFITTERS

3 FIT AND SECURE

3.1

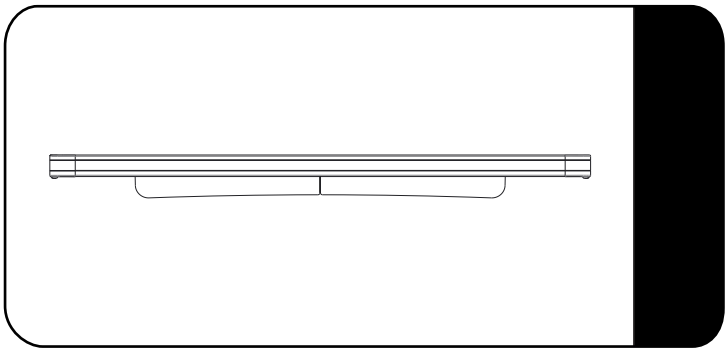

Make sure that the wind deflector is installed before you proceed to the next step.

Refer to Rack Fitment Guide.

Half Rack

3.2

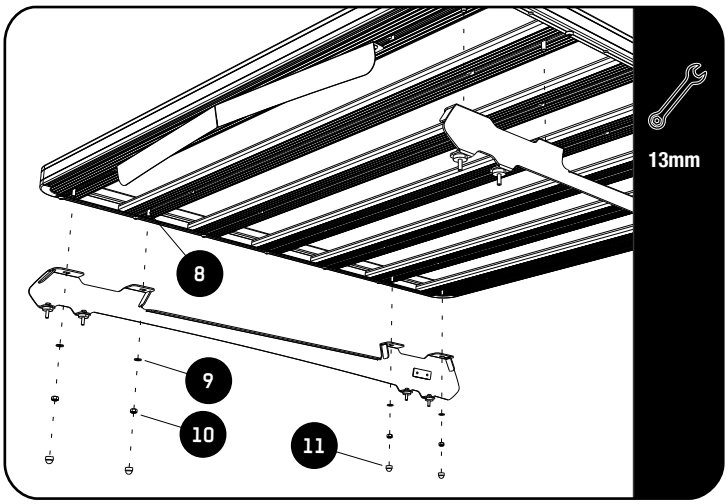

Fit your Roof Rack to the Foot Rails using M8 x 20 Hex Bolts, M8 x 16 x 1.6SS Flat Washers and M8 Nyloc Nuts (Items 8, 9 & 10).

Full Rack

3.3

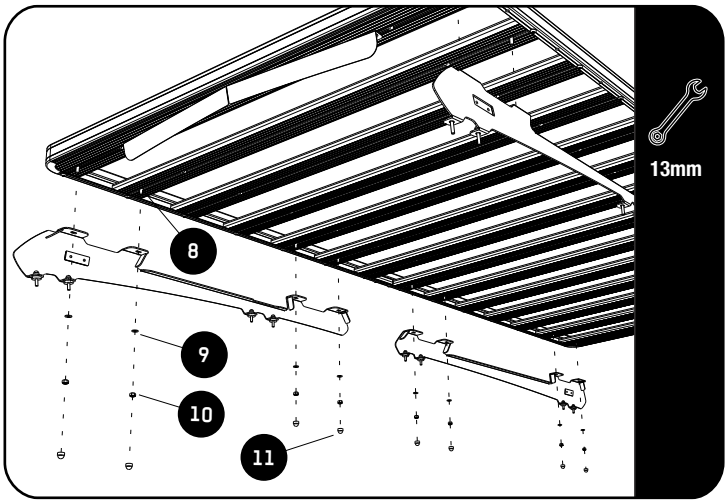

3.4

Center the rack and tighten fully. Use M8 nut caps (Item 11) to finish off the nuts.

© 2020 FRONT RUNNER VEHICLE OUTFITTERS

4 COMPLETION

4.1 Congratulations! You did it. Take a step back and admire your work!

5 INSTALL OTHER VEHICLE AND RACK ACCESSORIES

Now's the time to visit your favorite Front Runner Dealer in person or online.

IMPORTANT!

FRONT RUNNER RACK KITS OFTEN HAVE A HIGHER LOAD RATING THAN THE VEHICLES THEY ARE MOUNTED TO. PLEASE REFER TO YOUR SPECIFIC VEHICLE MANUFACTURER FOR A RECOMMENDED ROOF RATING. FRONT RUNNER CANNOT BE RESPONSIBLE FOR IMPROPER LOADING BEYOND THE VEHICLE MANUFACTURER'S STATED LOAD CAPACITY.

Be sure to tag us. We love to see our gear in action! #FrontRunnerOutfitters #BornToRoam

Share your adventures on:

© 2020 FRONT RUNNER VEHICLE OUTFITTERS