START HERE!

READ ME FIRST

Don't be a hero and muscle through this without first reading these fitting instructions! Improper installation of this gear may void certain aspects of your warranty.

Before you begin, take a moment and open all your Front Runner rack kit boxes and gather the assembly instructions for the various components.

A complete kit will contain:

1. A Front Runner Mounting System specific to your vehicle

2. A Front Runner Rack Tray or Load Bar Slats

This document will guide you through the assembly of the mounting system and assist you in fitting the roof rack tray or load bars to your specific vehicle.

Please refer to the next page for a list of all the components, quantities and tools required.

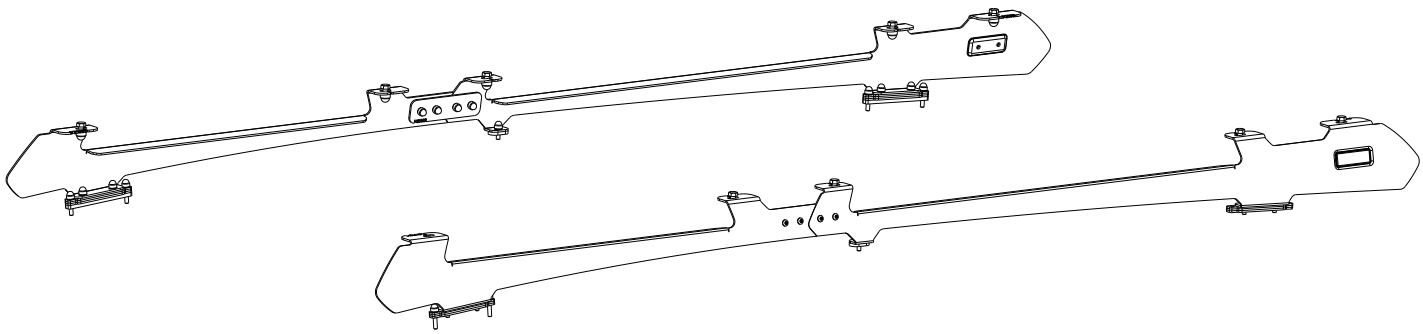

IMPORTANT WARNING! ⚠

IT IS CRITICAL THAT ALL FRONT RUNNER PRODUCTS BE PROPERLY AND SECURELY ASSEMBLED AND ATTACHED TO YOUR VEHICLE. IMPROPER ATTACHMENT COULD RESULT IN AN AUTOMOBILE ACCIDENT, AND COULD CAUSE SERIOUS BODILY INJURY OR DEATH. YOU ARE RESPONSIBLE FOR ASSEMBLING AND SECURING ALL FRONT RUNNER PRODUCTS TO YOUR VEHICLE. CHECKING THE ATTACHMENTS PRIOR TO USE, AND PERIODICALLY INSPECTING THE PRODUCTS FOR ADJUSTMENT, WEAR AND DAMAGE. THEREFORE YOU MUST READ AND UNDERSTAND ALL OF THE INSTRUCTIONS AND PRECAUTIONS SUPPLIED WITH YOUR FRONT RUNNER PRODUCT PRIOR TO INSTALLATION OR USE. IF YOU DO NOT UNDERSTAND ALL OF THE INSTRUCTIONS AND CAUTIONS, OR IF YOU HAVE NO MECHANICAL EXPERIENCE AND ARE NOT THOROUGHLY FAMILIAR WITH THE INSTALLATION PROCEDURES, YOU SHOULD HAVE THE PRODUCT INSTALLED BY A PROFESSIONAL INSTALLER OR OTHER QUALIFIED PERSONNEL.

 © 2022 FRONT RUNNER VEHICLE OUTFITTERS

1 GET ORGANIZED

Here is what you are looking at for FAMP002

IN THE BOX		
1	2 X	Front Foot Rail; 1xLH, 1xRH
2	2 X	Rear Foot Rail; 1xLH, 1xRH
3	4 X	Foot Mount
4	2 X	Foot Spacer 2
5	2 X	Joiner Plate
6	18 X	Nut Cap M6
7	10 X	M6 x 20 Hex Bolt
8	18 X	M6 Spring Washer
9	26 X	M6 x 19 x 1 SS Flat Washer
10	10 X	M8 x 20 Hex Bolt
11	10 X	M8 x 16 x 1.6 SS Flat Washer

IN THE BOX CONTINUED		
12	10 X	M8 Nyloc Nut
13	10 X	M8 Nut Cap
14	8 X	M6 x 16 Button Head Bolt
15	8 X	M6 Nyloc Nut
16	4 X	6mm Spacer - Front & Rear
17	8 X	M6 x 30 Hex Bolt
18	8 X	M6 x 12 x 1 Flat Washer
19	2 X	Nut Plate

TOOLS NEEDED

10mm
12mm
13mm

Measuring Tape

Allen Key 4mm

FIGURE 1.1

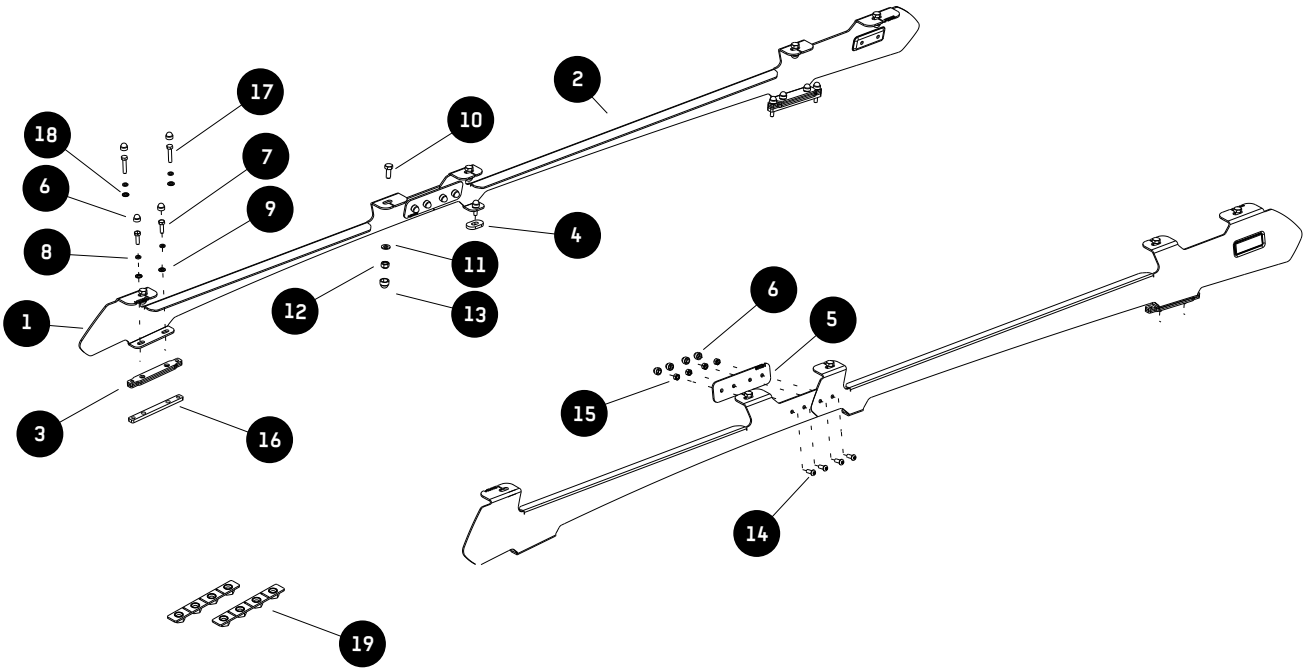

 © 2022 FRONT RUNNER VEHICLE OUTFITTERS

2 FIT AND SECURE

2.1

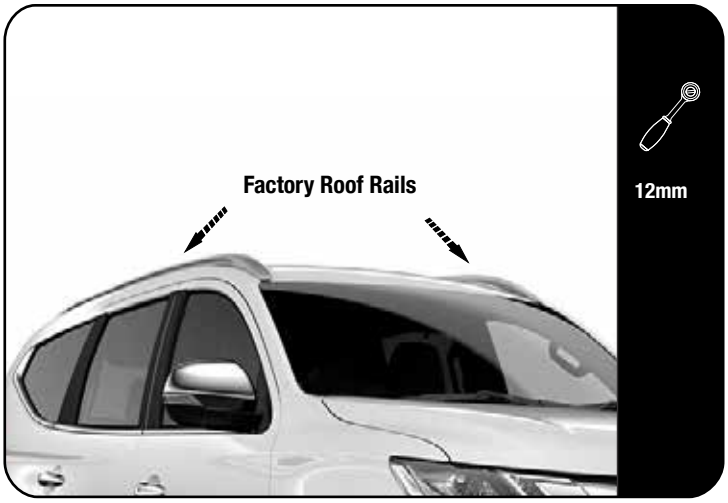

Tightening Torque:

M6 : 8-10Nm / 5.9 ft lb - 7.38 ft lb
M8 : 15-20Nm / 11.06 ft lb - 14.75 ft lb

To do this ftment you first need to remove the factory rails and lower the interior roof linning before moving to the next step. Check how to online.

Remove the 2 double saddle bracket, one in front and one at the rear. This will be replaced with the Front Runner Foot Mountings and Spacers (Item 3 & 16)

2.2

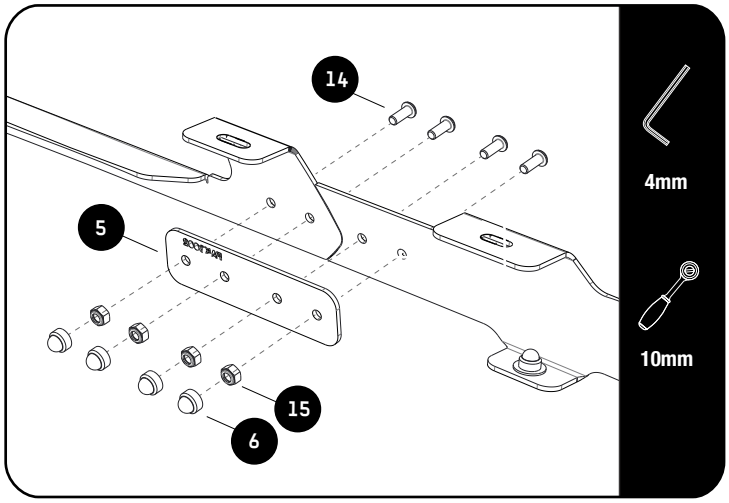

Assemble the front and rear foot rail (Items 1 and 2) with the joiner plate (Item 5) and fasteners (Items 6 & 15) as shown.

2.3

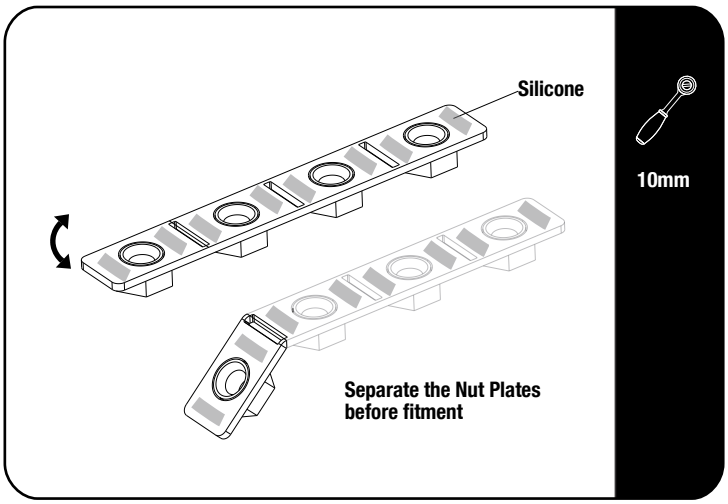

Apply a bead of silicone on the four Nut Plates (Item 19). This will bond the Nut Plates in place, so that the headliner does not need to be removed in future, should you want to remove the rack.

See 2.4 for Foot Rail fitment.

© 2022 FRONT RUNNER VEHICLE OUTFITTERS

2 FIT AND SECURE

2.4

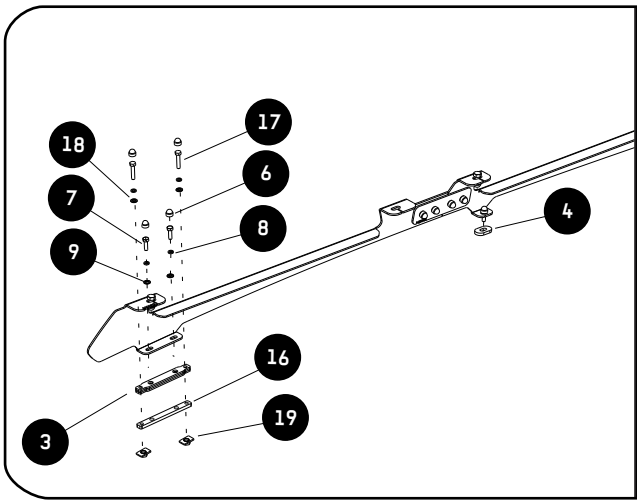

Place a bead of sealant in and around each hole in the roof.

Place the Foot Mount and Spacers (Items 3 & 16) over the holes where you have removed the 2 double OEM saddle brackts in 2.1 and secure using M6 x 30 Hex bolts, M6 Spring Washers, M6 Flat Washers and Nut plates (Items 8, 17 & 19) as shown in 2.3.

Place the spacer (Item 4) onto the middle OEM saddle bracket.

Place the foot rail that you assembled in 2.2 on the spacers and fully secure it with Items 7, 8 & 9 as shown.

3 FIT AND SECURE

3.1

Refer to RRSTUNI when assembling your Slimline II Tray.

3.2

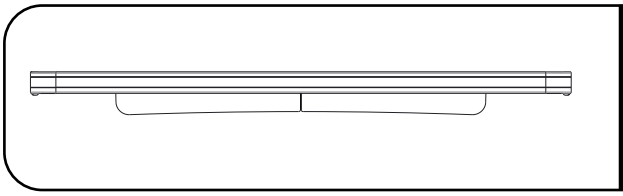

Make sure that the wind deflector is installed before you proceed to the next step.

3.3

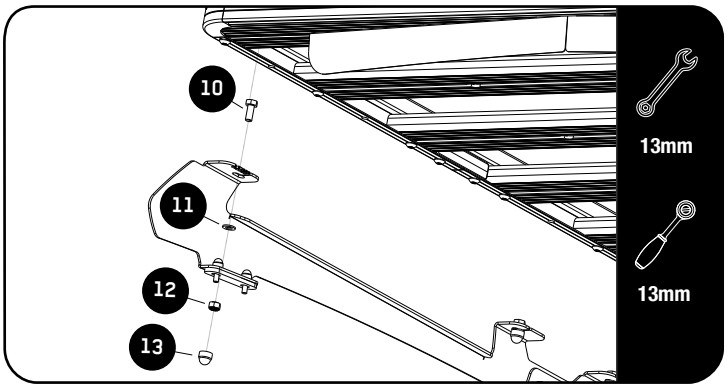

Slide Item 10 into the t-slots shown in 3.3. Loosely fit the roof rack to the foot rails by using Items 11 & 12.

3.4

Centre the rack and fully tighten all the fasteners. Use M6 & M8 nut caps (Items 8 & 15) to finish off the nuts.

© 2022 FRONT RUNNER VEHICLE OUTFITTERS

4 FINISH

Congratulations! You did it. Take a step back and admire your work!

5 INSTALL OTHER VEHICLE AND RACK ACCESSORIES

Now's the time to visit your favorite Front Runner Dealer in person or online.

Be sure to tag us. We love to see our gear in action! #FrontRunnerOutfitters #BornToRoam

Share your adventures on:

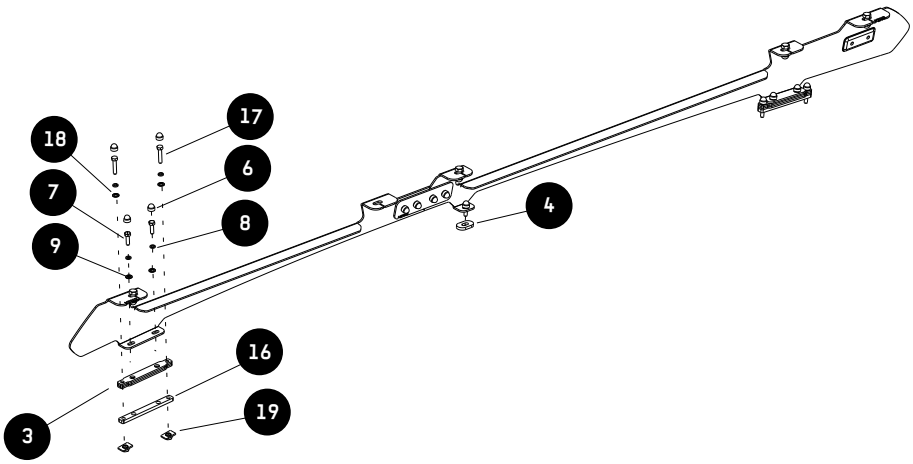

© 2022 FRONT RUNNER VEHICLE OUTFITTERS