FRONT RUNNER

LAND ROVER FREELANDER (2006–2014) FOOT RAIL

ENG

FALF002

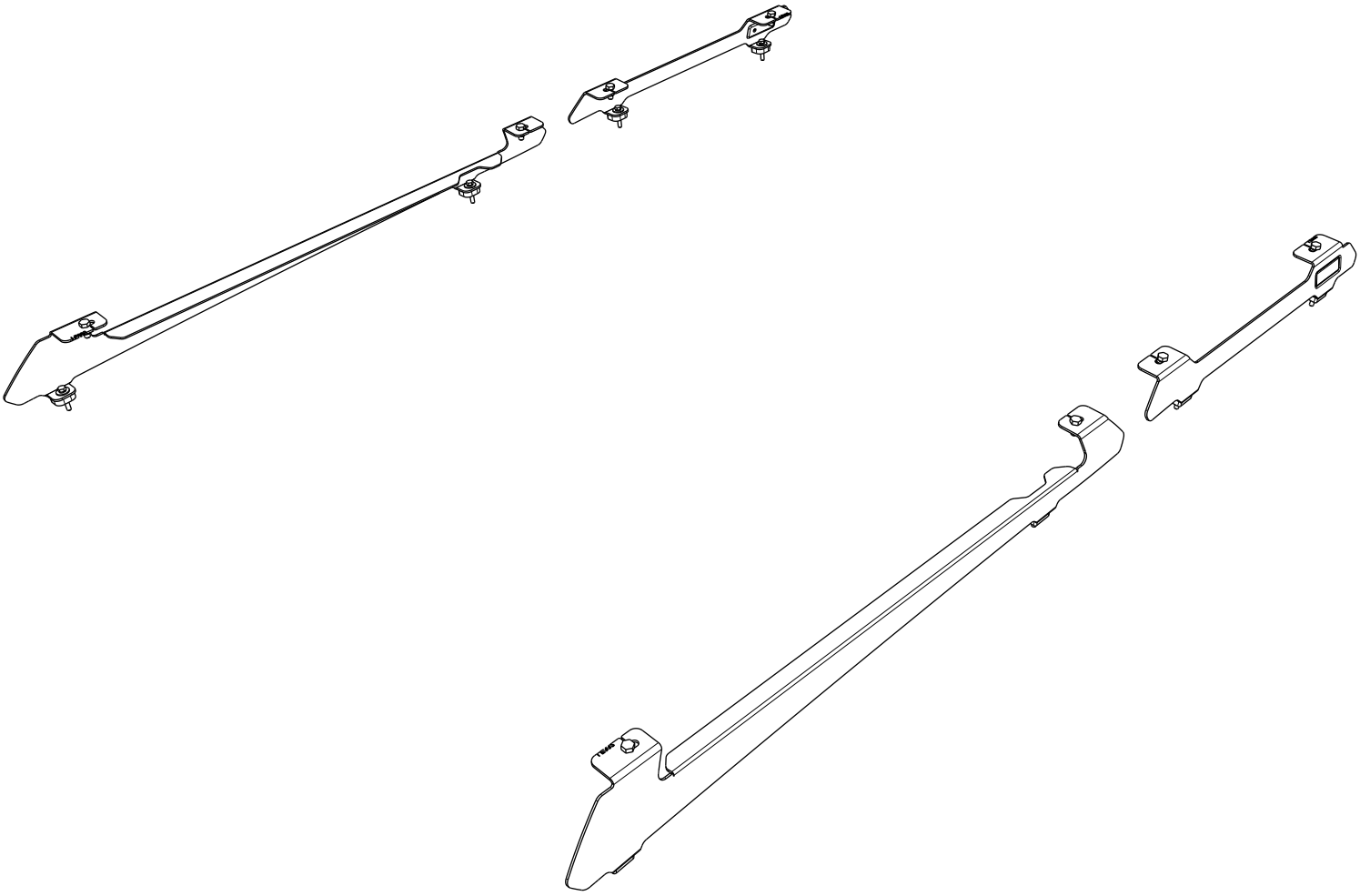

READ ME !

Thank you for purchasing a Front Runner Land Rover Freelander (2006 - 2014) Foot Rail.

Before you start, take a moment to familiarize yourself with the Fitting Instructions and the components received.

Refer to Page 2 for a list of all the components, quantities and tools required.

IMPORTANT WARNING!

IT IS CRITICAL THAT ALL FRONT RUNNER PRODUCTS BE PROPERLY AND SECURELY ASSEMBLED AND ATTACHED TO YOUR VEHICLE. IMPROPER ATTACHMENT COULD RESULT IN AN AUTOMOBILE ACCIDENT, AND COULD CAUSE SERIOUS BODILY INJURY OR DEATH. YOU ARE RESPONSIBLE FOR ASSEMBLING AND SECURING ALL FRONT RUNNER PRODUCTS TO YOUR VEHICLE, CHECKING THE ATTACHMENTS PRIOR TO USE, AND PERIODICALLY INSPECTING THE PRODUCTS FOR ADJUSTMENT, WEAR AND DAMAGE. THEREFORE, YOU MUST READ AND UNDERSTAND ALL OF THE INSTRUCTIONS AND PRECAUTIONS SUPPLIED WITH YOUR FRONT RUNNER PRODUCT PRIOR TO INSTALLATION OR USE. IF YOU DO NOT UNDERSTAND ALL OF THE INSTRUCTIONS AND CAUTIONS, OR IF YOU HAVE NO MECHANICAL EXPERIENCE AND ARE NOT THOROUGHLY FAMILIAR WITH THE INSTALLATION PROCEDURES, YOU SHOULD HAVE THE PRODUCT INSTALLED BY A PROFESSIONAL INSTALLER OR OTHER QUALIFIED PERSONNEL.

NOTE: Front Runner will not be responsible for any damage caused by the failure to install the product according to these instructions.

Please call us if you have any questions about the installation of this product.

© 2021 FRONT RUNNER VEHICLE OUTFITTERS

1 GET ORGANIZED

IN THE BOX		
1	2 X	Foot Rail Front 1LH / 1RH
2	2 X	Foot Rail Rear 1LH / 1RH
3	8 X	M8x20 Hex Bolt
4	8 X	M8X16X1.6 Flat Washer
5	8 X	M8 Nyloc Nut
6	8 X	10mm Spacer
7	8 X	M6x19 Flat Washer
8	8 X	M6 Spring Washer
9	8 X	M6x35 Hex Bolt
10	4 X	6mm Spacer
11	8 X	M8 Nut Cap
12	8 X	M6 Nut Cap

TOOLS NEEDED

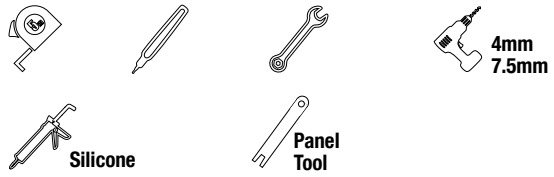

FIGURE 1.1

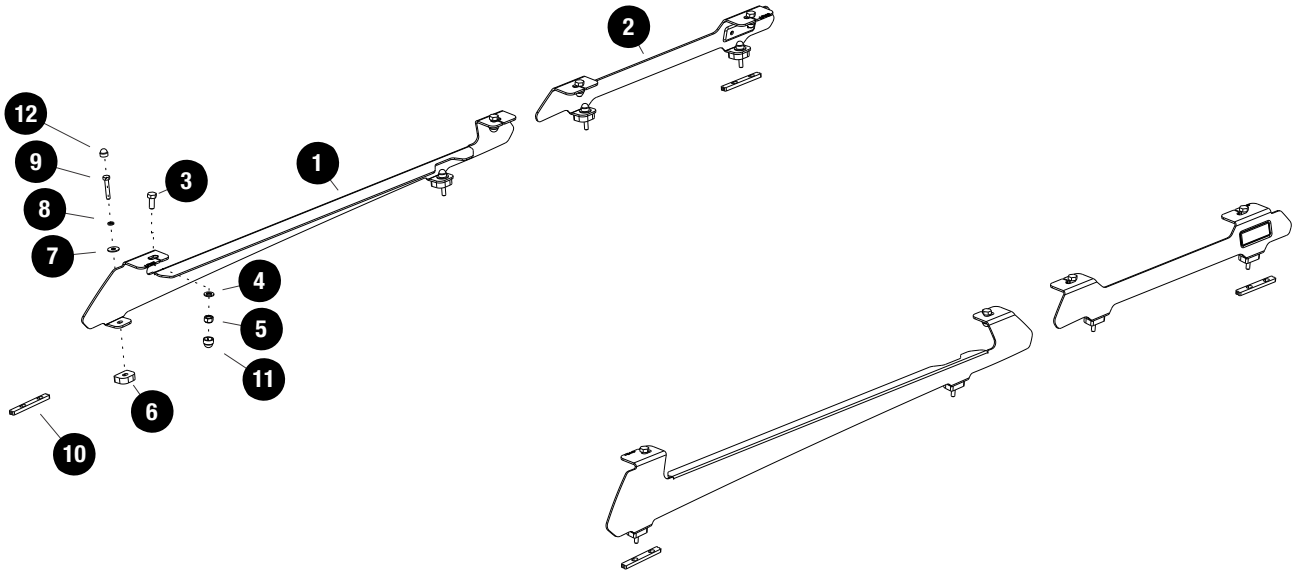

© 2021 FRONT RUNNER VEHICLE OUTFITTERS

2 FIT AND SECURE

2.1

Using a suitable panel tool, remove the ditch moulding on the left and right side of the vehicle.

Remove the factory plastic clips as shown.

2.2

Using a Suitable panel tool, remove the plastic clips at the rear.

2.3

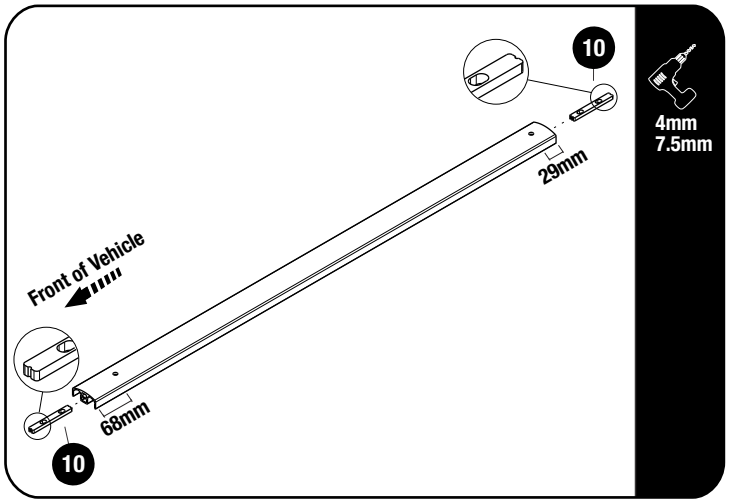

Measure and mark the hole positions on the ditch moulding as shown in 2.3. The positions must be centered on the moulding.

Drill a 4mm pilot hole on the markings you made. Open the pilot holes using a 7.5mm drill.

Slide the 6mm Spacer (Item 10) into the opening of the ditch mouling after all holes has been drilled, make sure the notch is facing outwards as shown.

Clip the ditch moulding back into place.

© 2021 FRONT RUNNER VEHICLE OUTFITTERS

2 FIT AND SECURE

2.4

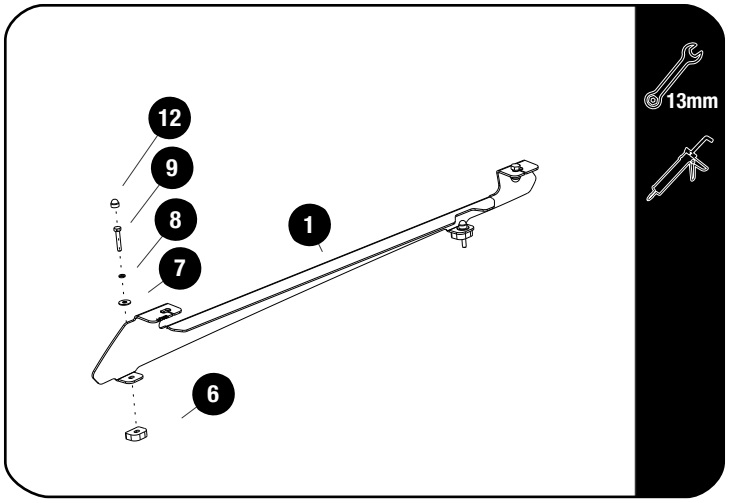

Place the front Foot Rails LH / RH (Item 1) over the spacers (Item 6).

Place silicone on the threads of the M6x35 Hex bolts and secure the foot rails, using M6x19x1 Flat Washers, M6 Spring Washers & M6x35 Hex Bolts (Items 7, 8 & 9)

Place M6 Nut Caps on all hex bolts (Item 12).

2.5

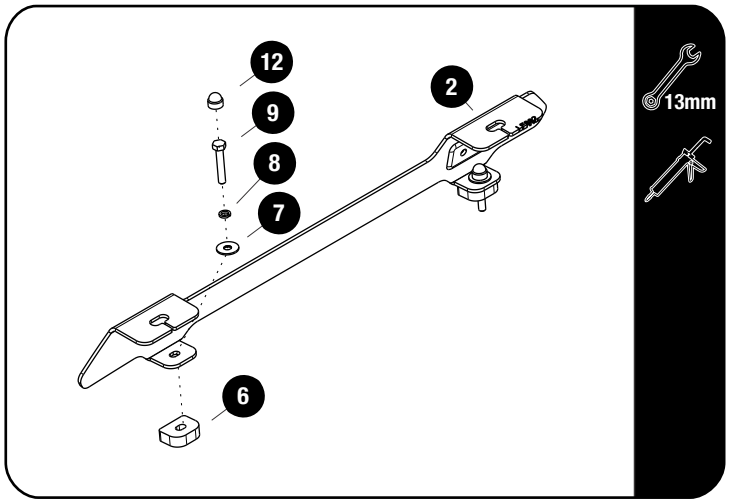

Place the rear Foot Rails LH / RH (Item 2) over the Spacers (Item 6).

Place silicone on the threads of the M6x35 Hex Bolts and secure the Foot Rails, using M6x19x1 Flat Washers, M6 Spring Washers & M6x35 Hex Bolts (Items 7, 8 & 9)

Place M6 Nut Caps on all Hex Bolts (Item 12).

© 2021 FRONT RUNNER VEHICLE OUTFITTERS

3 FIT AND SECURE

3.1

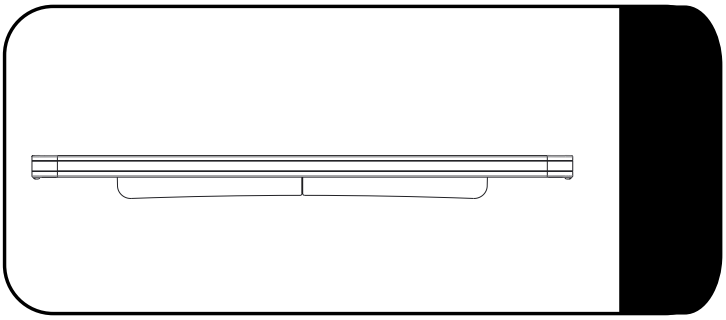

Make sure that the wind deflector is installed before you proceed to the next step.

3.2

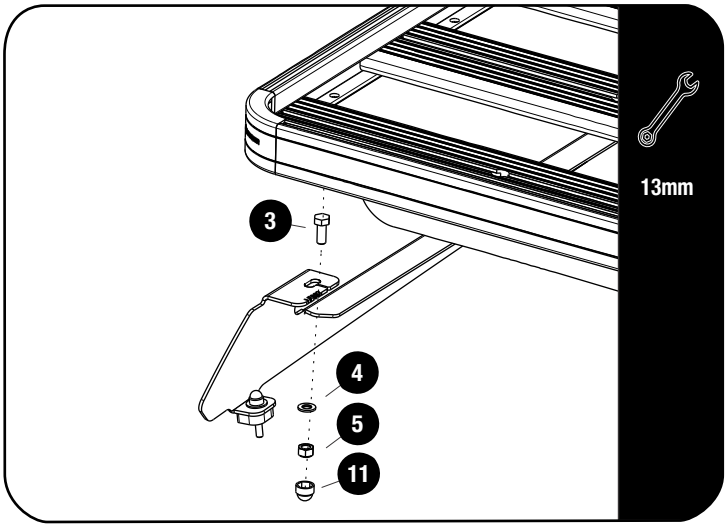

Secure your roof rack to the Foot Rails using M8 x 20 Hex Bolts, M8 x 16 x 1.6SS Flat Washers and M8 Nyloc Nuts (Items 3, 4 & 5).

3.3

Center the rack and tighten fully. Use M8 nut caps (Items 11) to finish off the nuts.

© 2021 FRONT RUNNER VEHICLE OUTFITTERS

4 COMPLETION

4.1 Congratulations! You did it. Take a step back and admire your work!

5 INSTALL OTHER VEHICLE AND RACK ACCESSORIES

Now's the time to visit your favorite Front Runner Dealer in person or online.

IMPORTANT!

FRONT RUNNER RACK KITS OFTEN HAVE A HIGHER LOAD RATING THAN THE VEHICLES THEY ARE MOUNTED TO. PLEASE REFER TO YOUR SPECIFIC VEHICLE MANUFACTURER FOR A RECOMMENDED ROOF RATING. FRONT RUNNER CANNOT BE RESPONSIBLE FOR IMPROPER LOADING BEYOND THE VEHICLE MANUFACTURER'S STATED LOAD CAPACITY.

Be sure to tag us. We love to see our gear in action! #FrontRunnerOutfitters #BornToRoam

Share your adventures on:

© 2021 FRONT RUNNER VEHICLE OUTFITTERS