START HERE!

READ ME FIRST

Don't be a hero and muscle through this installation without reading these fitting instructions first! Improper installation of this gear may void certain aspects of your warranty.

Before you begin, take a moment and open all your Front Runner Rack Kit boxes and gather the assembly instructions for the various components.

A complete kit will contain:

1. Front Runner Mounting System specific to your vehicle
2. Front Runner Rack Tray or Load Bar Slats

This document will guide you through the assembly of the Mounting System and assist you in fitting the Rack Tray or Load Bars to your specific vehicle.

Please refer to the next page for a list of all the components, quantities and tools required.

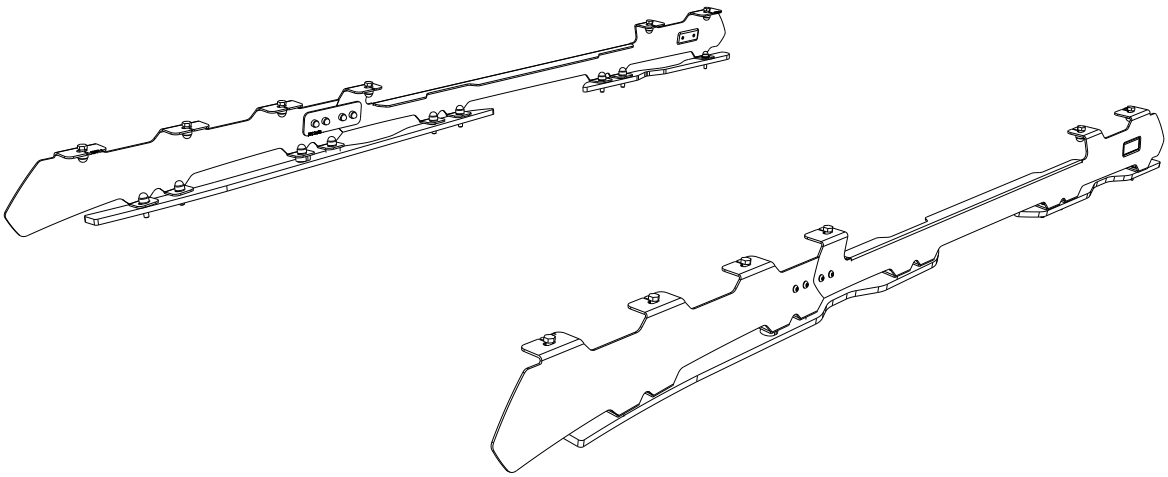

IMPORTANT WARNING! ⚠

IT IS CRITICAL THAT ALL FRONT RUNNER PRODUCTS BE PROPERLY AND SECURELY ASSEMBLED AND ATTACHED TO YOUR VEHICLE. IMPROPER ATTACHMENT COULD RESULT IN AN AUTOMOBILE ACCIDENT, AND COULD CAUSE SERIOUS BODILY INJURY OR DEATH. YOU ARE RESPONSIBLE FOR ASSEMBLING AND SECURING ALL FRONT RUNNER PRODUCTS TO YOUR VEHICLE, CHECKING THE ATTACHMENTS PRIOR TO USE, AND PERIODICALLY INSPECTING THE PRODUCTS FOR ADJUSTMENT, WEAR AND DAMAGE. THEREFORE, YOU MUST READ AND UNDERSTAND ALL OF THE INSTRUCTIONS AND PRECAUTIONS SUPPLIED WITH YOUR FRONT RUNNER PRODUCT PRIOR TO INSTALLATION OR USE. IF YOU DO NOT UNDERSTAND ALL OF THE INSTRUCTIONS AND CAUTIONS, OR IF YOU HAVE NO MECHANICAL EXPERIENCE AND ARE NOT THOROUGHLY FAMILIAR WITH THE INSTALLATION PROCEDURES, YOU SHOULD HAVE THE PRODUCT INSTALLED BY A PROFESSIONAL INSTALLER OR OTHER QUALIFIED PERSONNEL.

NOTE: Front Runner will not be responsible for any damage caused by the failure to install the product according to these instructions.
Please call us if you have any questions about the installation of this product.

 © 2021 FRONT RUNNER VEHICLE OUTFITTERS

1 GET ORGANIZED

IN THE BOX

1	2 X	Foot Rail Front (1LH, 1RH)
2	2 X	Foot Rail Rear (1LH, 1RH)
3	2 X	Spacer Front
4	2 X	Spacer Rear
5	18 X	Spacer
6	10 X	M6 Nut Cap
7	8 X	M6 Nyloc Nut
8	2 X	Joiner Plate
9	8 X	M6 x 16 Button Head Bolt
10	28 X	M8 x 16 x 1.6SS Please Washer
11	16 X	M8 Spring Washer
12	16 X	M8 x 30 Hex Bolt
13	28 X	M8 Nut Cap

IN THE BOX

14	12 X	M8 x 20 Hex Bolt
15	12 X	M8 Nyloc Nut
16	2 X	M6 x 30 Hex Bolt
17	2 X	M6 Spring Washer
18	2 X	M6 x 19 x 1SS Flat Washer

TOOLS NEEDED

10mm
13mm

Sealant

T45 Torx

T30 Torx 5 Point

Heat Gun

Screwdriver

FIGURE 1.1

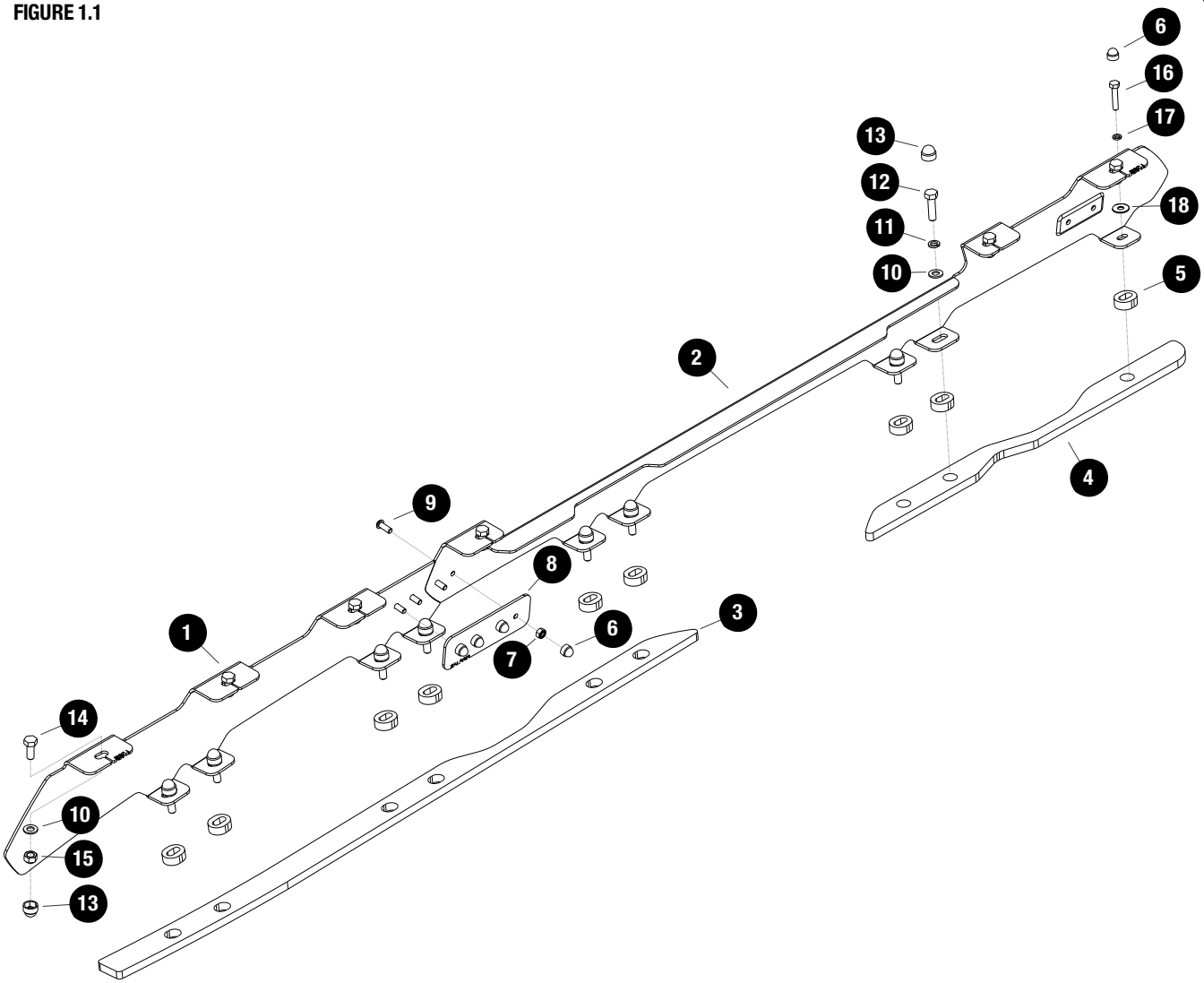

 © 2021 FRONT RUNNER VEHICLE OUTFITTERS

2 RACK FITMENT ON VEHICLE WITH OEM RAILS

2.1

Remove the OEM rails from left and right side of the vehicle. It is advised to use a heat gun to heat the fasteners a little to soften the factory loc tite before removing.

Loosen with care and take your time as the factory bolts have a lot of loc tite and if not careful the inserts can break loose.

Take care not to overheat paint!

Remove the front saddle bracket under both rails.

2.2

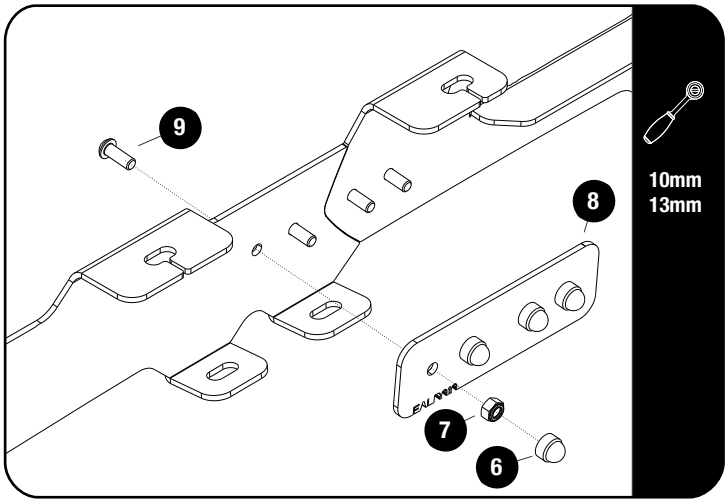

Assemble the Front and Rear Foot Rails (Items 1 & 2) using the Joiner Plate (Item 8) and M6 x 16 Button Head Bolts and M6 Nyloc Nuts (Items 7 & 9) as shown.

Finish off by placing M6 Nut Caps (Item 6) on the Nyloc Nuts.

2.3

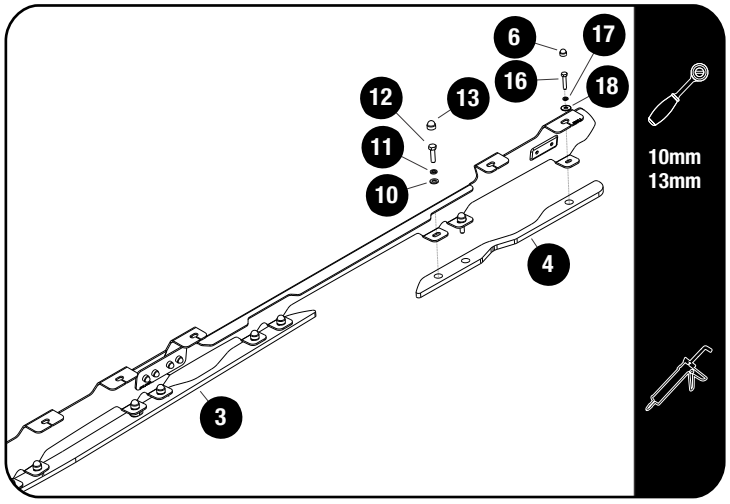

Remove the tape covering the rear hole.

Place the Front and Rear Spacers (Items 3 & 4) into the ditch where you removed the OEM rails.

Align the holes in the Spacers with the factory holes in the vehicle's ditch.

Place a bead of all purpose/waterproof sealant on the bolt threads before securing to the roof.

Secure the Foot Rails to the vehicle using M8 x 30 Hex Bolts, M8 Spring Washers and M8 x 16 x 1.6 Flat Washers (Items 10, 11 & 12) in all holes exept the one at the rear.

Use the M6 x 30 Hex Bolts, M6 Spring Washers and M6 x 19 x 1 Flat Washers (Items 16, 17 & 18) on the two rear holes in the Foot Rail.

Fully tighten all bolts.

Place M8 Nut Caps (Item 13) on the M8 Bolt Heads and M6 Nut Caps (Item 6) on the M6 Bolt Heads.

 © 2021 FRONT RUNNER VEHICLE OUTFITTERS

3 RACK FITMENT ON VEHICLE WITH OEM RAILS

3.1 Refer to RRSTUNI when assembling your Slimline II Tray.

3.2

Make sure that the Wind Deflector is installed before you proceed to the next step.

3.3

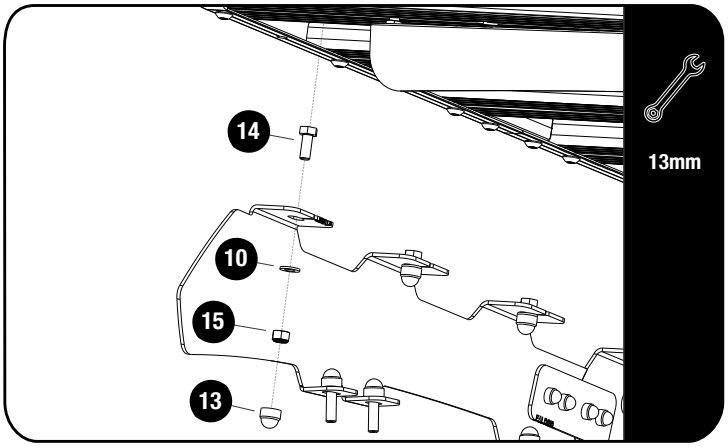

Fit your roof rack to the Foot Rails using M8 x 20 Hex Bolts, M8 x 16 x 1.6 Flat Washers and M8 Nyloc Nuts (Items 10, 14 & 15) as shown.

3.4 Center the rack and tighten fully. Use M8 Nut Caps (Items 13) to finish off the nuts.

© 2021 FRONT RUNNER VEHICLE OUTFITTERS

4 RACK FITMENT ON VEHICLE WITHOUT OEM RAILS

4.1

Remove the plugs on the ditch cover.

Remove the screws under the plugs.

4.2

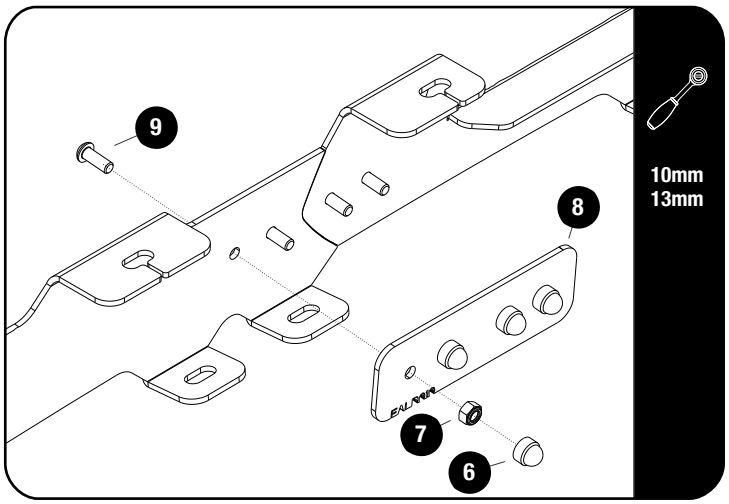

Assemble the Front and Rear Foot Rails (Items 1 & 2) using the Joiner Plate (Item 8) and M6 x 16 Button Head Bots and M6 Nyloc Nuts (Items 7 & 9) as shown.

Finish off by placing M6 Nut Caps (Item 6) on the Nyloc Nuts.

4.3

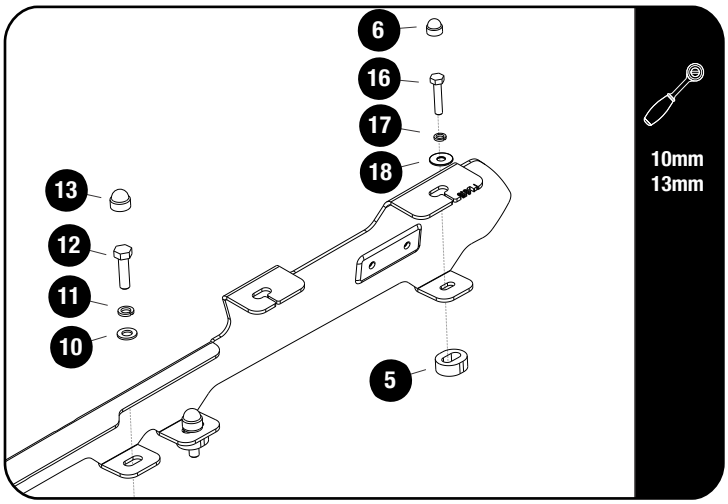

Place one Spacer (Item 5) into each of the openings where the rail plugs were removed in 4.1.

Place a bead of all-purpose/waterproof sealant on the bolt threads before securing to the roof.

Secure the Foot Rails to the vehicle using M8 x 30 Hex Bolts, M8 Spring Washers and M8 x 16 x 1.6 Flat Washers (Items 10, 11 & 12) in all holes except the one at the rear.

Use an M6 x 30 Hex Bolts, M6 Spring Washers and M6 x 19 x 1 Flat Washers (Items 16, 17 & 18) on the two rear holes in the Foot Rail.

Fully tighten all bolts.

Place M8 Nut Caps (Item 13) on the M8 Bolt Heads and M6 Nut Caps (Item 6) on the M6 Bolt Heads.

 © 2021 FRONT RUNNER VEHICLE OUTFITTERS

5 RACK FITMENT ON VEHICLE WITHOUT OEM RAILS

5.1

Refer to RRSTUNI when assembling your Slimline II Tray.

5.2

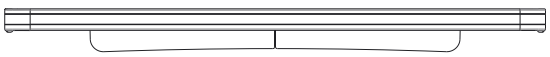

Make sure that the Wind Deflector is installed before you proceed to the next step.

5.3

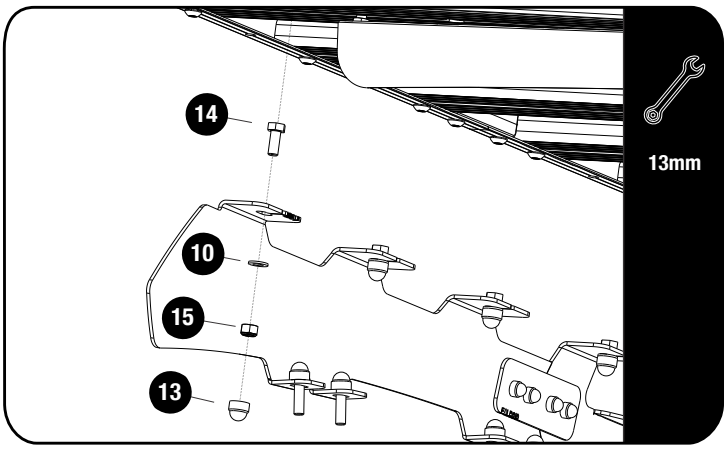

Fit your roof rack to the Foot Rails using M8 x 20 Hex Bolts, M8 x 16 x 1.6 Flat Washers and M8 Nyloc Nuts (Items 10, 14 & 15) as shown.

5.4

Center the rack and tighten fully. Use M8 Nut Caps (Items 13) to finish off the nuts.

© 2021 FRONT RUNNER VEHICLE OUTFITTERS

6 COMPLETION

6.1 Congratulations! You did it. Take a step back and admire your work!

7 INSTALL OTHER VEHICLE AND RACK ACCESSORIES

Now's the time to visit your favorite Front Runner dealer in person or online.

IMPORTANT! ⚠

FRONT RUNNER RACK KITS OFTEN HAVE A HIGHER LOAD RATING THAN THE VEHICLES THEY ARE MOUNTED TO. PLEASE REFER TO YOUR SPECIFIC VEHICLE MANUFACTURER FOR A RECOMMENDED ROOF RATING. FRONT RUNNER CANNOT BE RESPONSIBLE FOR IMPROPER LOADING BEYOND THE VEHICLE MANUFACTURER'S STATED LOAD CAPACITY.

Be sure to tag us. We love to see our gear in action! #FrontRunnerOutfitters #BornToRoam

Share your adventures on:

© 2021 FRONT RUNNER VEHICLE OUTFITTERS