START HERE!

READ ME FIRST

Don't be a hero and muscle through this installation without reading these fitting instructions first! Improper installation of this gear may void certain aspects of your warranty.

Before you begin, take a moment and open all your Front Runner rack kit boxes and gather the assembly instructions for the various components.

A complete kit will contain:

1. A Front Runner Mounting System specific to your vehicle
2. A Front Runner Rack Tray or Load Bar Slats

This document will guide you through the assembly of the mounting system and assist you in fitting the roof rack tray or load bars to your specific vehicle.

Please refer to the next page for a list of all the components, quantities and tools required.

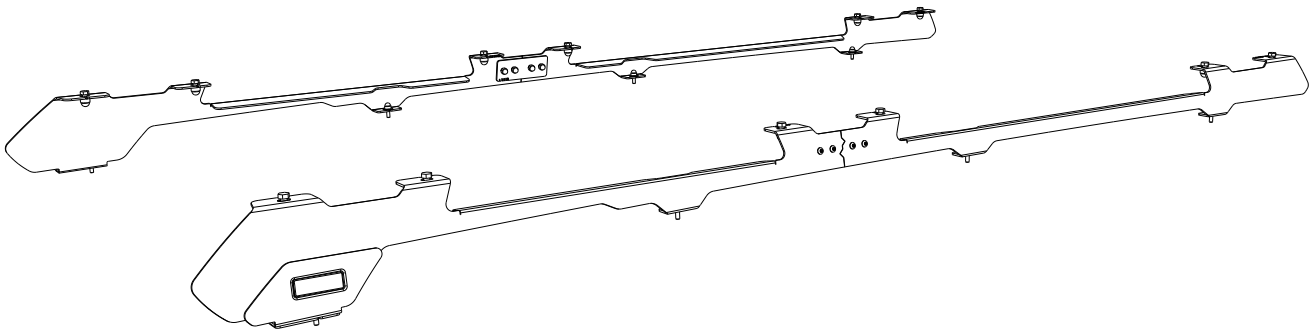

IMPORTANT WARNING! ⚠

IT IS CRITICAL THAT ALL FRONT RUNNER PRODUCTS BE PROPERLY AND SECURELY ASSEMBLED AND ATTACHED TO YOUR VEHICLE. IMPROPER ATTACHMENT COULD RESULT IN AN AUTOMOBILE ACCIDENT, AND COULD CAUSE SERIOUS BODILY INJURY OR DEATH. YOU ARE RESPONSIBLE FOR ASSEMBLING AND SECURING ALL FRONT RUNNER PRODUCTS TO YOUR VEHICLE, CHECKING THE ATTACHMENTS PRIOR TO USE, AND PERIODICALLY INSPECTING THE PRODUCTS FOR ADJUSTMENT, WEAR AND DAMAGE. THEREFORE, YOU MUST READ AND UNDERSTAND ALL OF THE INSTRUCTIONS AND PRECAUTIONS SUPPLIED WITH YOUR FRONT RUNNER PRODUCT PRIOR TO INSTALLATION OR USE. IF YOU DO NOT UNDERSTAND ALL OF THE INSTRUCTIONS AND CAUTIONS, OR IF YOU HAVE NO MECHANICAL EXPERIENCE AND ARE NOT THOROUGHLY FAMILIAR WITH THE INSTALLATION PROCEDURES, YOU SHOULD HAVE THE PRODUCT INSTALLED BY A PROFESSIONAL INSTALLER OR OTHER QUALIFIED PERSONNEL.

NOTE: Front Runner will not be responsible for any damage caused by the failure to install the product according to these instructions.

Please call us if you have any questions about the installation of this product.

 © 2024 FRONT RUNNER VEHICLE OUTFITTERS

1 GET ORGANIZED

IN THE BOX

1	16 X	M8 Nut Cap
2	8 X	M6 x 20 Hex Bolt
3	8 X	M6 Spring Washer
4	8 X	M6 x 19 x 1SS Flat Washer
5	2 X	Cover Plate - 1LH + 1 RH
6	12 X	M8 x 20 Hex Bolt
7	2 X	Front Foot Rail - 1LH + 1RH
8	12 X	M8 x 16 x 1.6SS Flat Washer
9	12 X	M8 Nyloc Nut
10	12 X	M8 Nut Cap
11	8 X	M6 Nyloc Nut
12	2 X	Joiner Plate
13	8 X	M6 x 16 Button Head Bolt
14	2 X	Rear Foot Rail - 1LH + 1RH
15	8 X	Washer Plate

TOOLS NEEDED

FIGURE 1.1

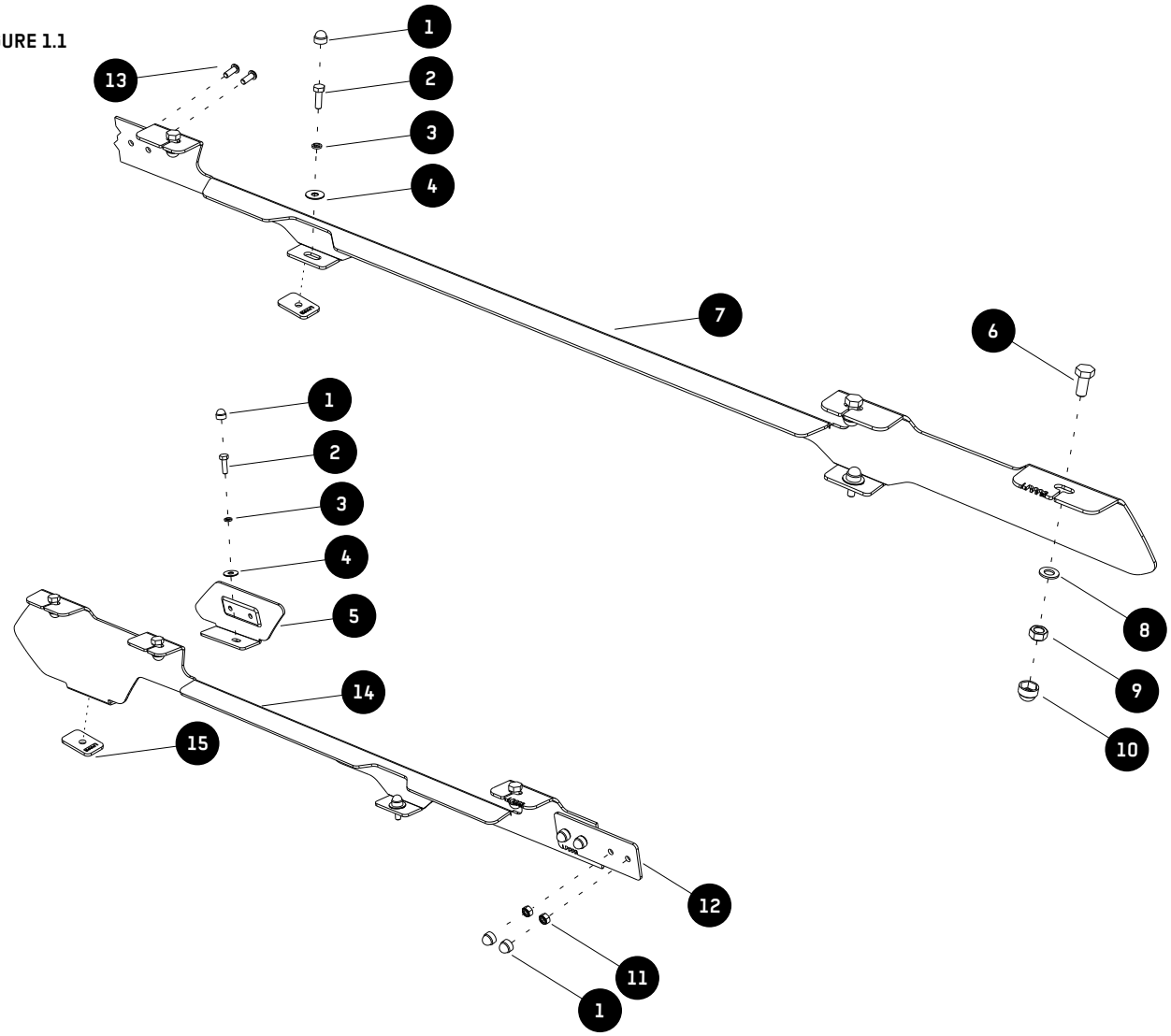

 © 2024 FRONT RUNNER VEHICLE OUTFITTERS

2 FIT AND SECURE

2.1

Using your torx wrench, loosen and remove the original factory tracks. If your vehicle did not come with these tracks, refer to 2.4.

2.2

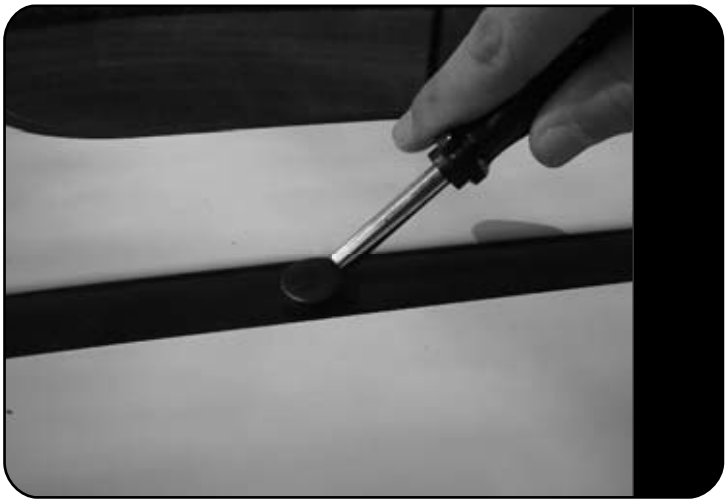

Use a small flat screwdriver and remove the plastic cap in the front ditch molding on either side of the sun roof to expose the threaded mounting points.

If your ditch moldings do not have the plastic caps,you will need to remove and drill holes in the ditch moldings. the position of the mounting points are best marked onto the ditch moldings by screwing a sharpened m6 bolt with its head cut off into the mounting point, sharp side up. Place the ditch molding back on the vehicle and push on the area above the sharpened bolt, therby marking the ditch moldings.

2.3

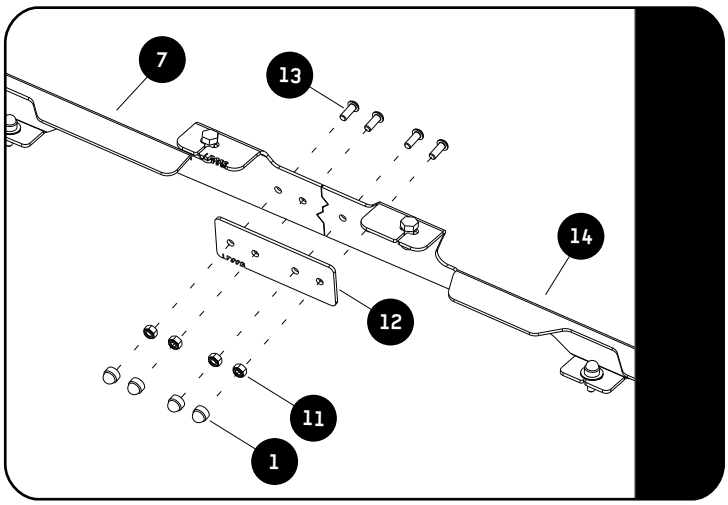

Loosely join the Front and Rear Foot Rails (Items 7 & 14) together using M6 x 16 Button Head Bolts, M6 Nyloc Nuts and the Joiner Plate (Items 11, 12 & 13) as shown.

 © 2024 FRONT RUNNER VEHICLE OUTFITTERS

2 FIT AND SECURE

2.4

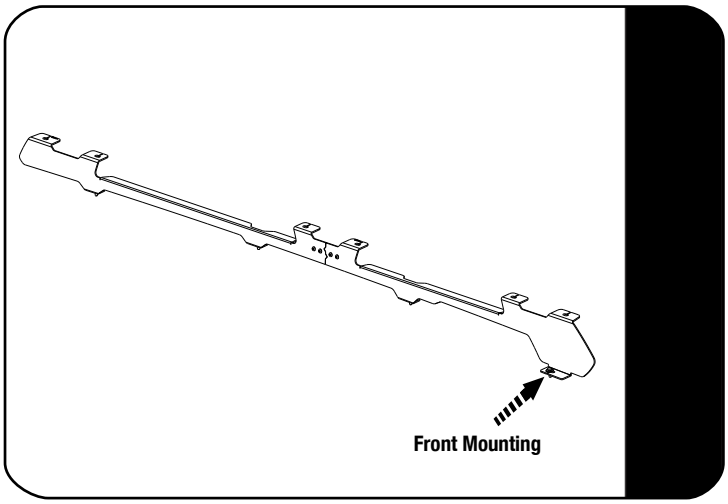

Only complete 2.4 if your vehicle did not come fitted with the original tracks refered to in 2.1.

Place the assembled Foot Rails onto the vehicle aligning the front mounting holes in the Foot Rail with the front mounting holes in the roof of the vehicle from 2.2.

Mark the position (front & rear) of the three mounting feet onto the ditch molding. Remove the Foot Rail and the ditch molding. Cut the ditch molding 5mm in from each of your markings and discard the pieces where the mounting feet sat. Reposition the ditch molding pieces in their original position, leaving gaps where the Foot Rail mounting feet are positioned.

2.5

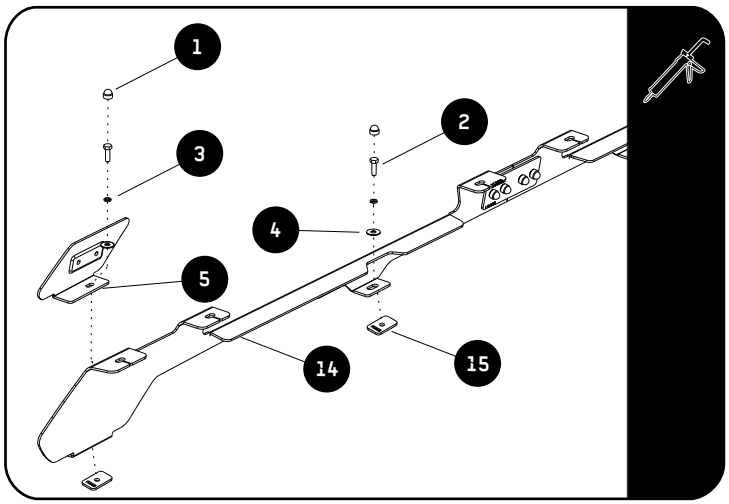

Before fitting the Foot Rails to the vehicle, ensure the factory hole threads are clean and free from any dirt or debris.

Place a bead of sealant around each threaded insert and place a Washer Plate (Item 15) over each.

Place the assembled Foot Rails onto the the Washer Plates, aligning the mounting holes in the Foot Rails with the mounting holes in the roof. Starting from the front, place the Cover Plate (Item 5) on top of the Foot Rails as shown and loosely fasten the Foot Rails to the vehicle using M6 x 20 Hex Bolts, M6 x 19 x 1S Flat Washers and M6 Spring Washers (Items 2, 3 & 4).

Push the Foot Rails towards the rear of the vehicle and tighten all bolts, securing the Foot Rails to the vehicle.

Finish off by placing M6 Nut Caps (Item 1) over all the Hex Bolts Heads and the Nyloc Nuts.

 © 2024 FRONT RUNNER VEHICLE OUTFITTERS

3 FIT AND SECURE

3.1

Refer to RRSTUNI when assembling your Slimline II Tray.

3.2

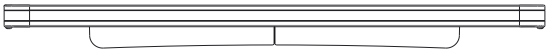

Make sure that the wind deflector is installed before you proceed to the next step.

3.3

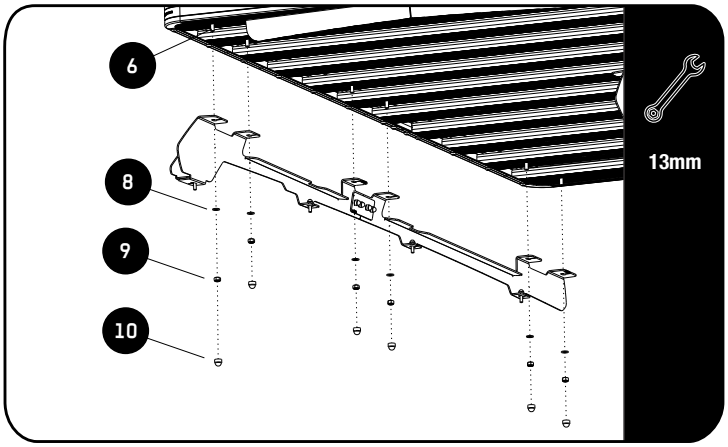

Fit your roof rack to the Foot Rails using M8 x 20 Hex Bolts, M8 x 16 x 1.6SS Flat Washers and M8 Nyloc Nuts (Items 6, 8 & 9) as shown.

3.4

Center the rack and tighten fully. Use M8 Nut Caps (Items 10) to finish off the nuts.

© 2024 FRONT RUNNER VEHICLE OUTFITTERS

4 COMPLETION

4.1 Congratulations! You did it. Take a step back and admire your work!

5 INSTALL OTHER VEHICLE AND RACK ACCESSORIES

Now's the time to visit your favorite Front Runner Dealer in person or online.

IMPORTANT! ⚠

FRONT RUNNER RACK KITS OFTEN HAVE A HIGHER LOAD RATING THAN THE VEHICLES THEY ARE MOUNTED TO. PLEASE REFER TO YOUR SPECIFIC VEHICLE MANUFACTURER FOR A RECOMMENDED ROOF RATING. FRONT RUNNER CANNOT BE RESPONSIBLE FOR IMPROPER LOADING BEYOND THE VEHICLE MANUFACTURER'S STATED LOAD CAPACITY.

Be sure to tag us. We love to see our gear in action! #FrontRunnerOutfitters #BornToRoam

Share your adventures on:

© 2024 FRONT RUNNER VEHICLE OUTFITTERS