START HERE!

READ ME FIRST

Don't be a hero and muscle through this without first reading these fitting instructions! Improper instalation of this gear may void certain aspects of your warranty.

Before you begin, take a moment and open all your Front Runner rack kit boxes and gather the assembly instructions for the various components.

A complete kit will contain:

1. A Front Runner Mounting System specific to your vehicle
2. A Front Runner Rack Tray or Load Bar Slats

This document will guide you through the assembly of the mounting system and assist you in fitting the roof rack tray or load bars to your specific vehicle.

Please refer to the next page for a list of all the components, quantities and tools required.

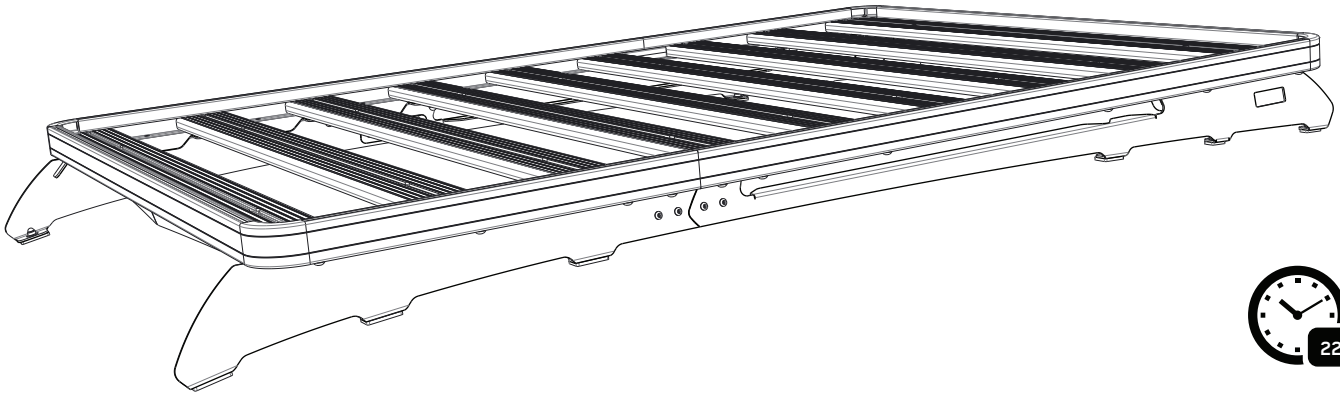

220 min

IMPORTANT WARNING! ⚠

IT IS CRITICAL THAT ALL FRONT RUNNER PRODUCTS BE PROPERLY AND SECURELY ASSEMBLED AND ATTACHED TO YOUR VEHICLE. IMPROPER ATTACHMENT COULD RESULT IN AN AUTOMOBILE ACCIDENT, AND COULD CAUSE SERIOUS BODILY INJURY OR DEATH. YOU ARE RESPONSIBLE FOR ASSEMBLING AND SECURING ALL FRONT RUNNER PRODUCTS TO YOUR VEHICLE. CHECKING THE ATTACHMENTS PRIOR TO USE, AND PERIODICALLY INSPECTING THE PRODUCTS FOR ADJUSTMENT, WEAR AND DAMAGE. THEREFORE YOU MUST READ AND UNDERSTAND ALL OF THE INSTRUCTIONS AND PRECAUTIONS SUPPLIED WITH YOUR FRONT RUNNER PRODUCT PRIOR TO INSTALLATION OR USE. IF YOU DO NOT UNDERSTAND ALL OF THE INSTRUCTIONS AND CAUTIONS, OR IF YOU HAVE NO MECHANICAL EXPERIENCE AND ARE NOT THOROUGHLY FAMILIAR WITH THE INSTALLATION PROCEDURES, YOU SHOULD HAVE THE PRODUCT INSTALLED BY A PROFESSIONAL INSTALLER OR OTHER QUALIFIED PERSONNEL.

 © COPYRIGHT 2016 FRONT RUNNER VEHICLE OUTFITTERS

1 GET ORGANIZED

Here is what you are looking at for FAKS002

IN THE BOX

1	2 X	Rear Foot Rail; 1xLH, 1xRH
2	2 X	Front Foot Rail; 1xLH, 1xRH
3	6 X	Foot Spacer 1
4	6 X	Foot Spacer 2
5	4 X	Foot Spacer 3
6	8 X	Foot Spacer 4
7	6 X	Foot Spacer 5
8	2 X	Splice Plate
9	8 X	M6x16 Button Head
10	8 X	M6x12x1 SS Flat Washer
11	20 X	M6 Nyloc Hex Nut
12	20 X	M6 Nut Cap
13	12 X	M6x19x1 SS Flat Washer

IN THE BOX CONTINUED

14	12 X	M8x20 Hex Bolt
15	12 X	M8x16x1.6 Stainless Steel Flat Washer
16	12 X	M8 Nyloc Hex Nut
17	12 X	M8 Nut Cap

TOOLS NEEDED

13mm
10mm

Measuring Tape

Allen Key
5mm

FIGURE 1.1

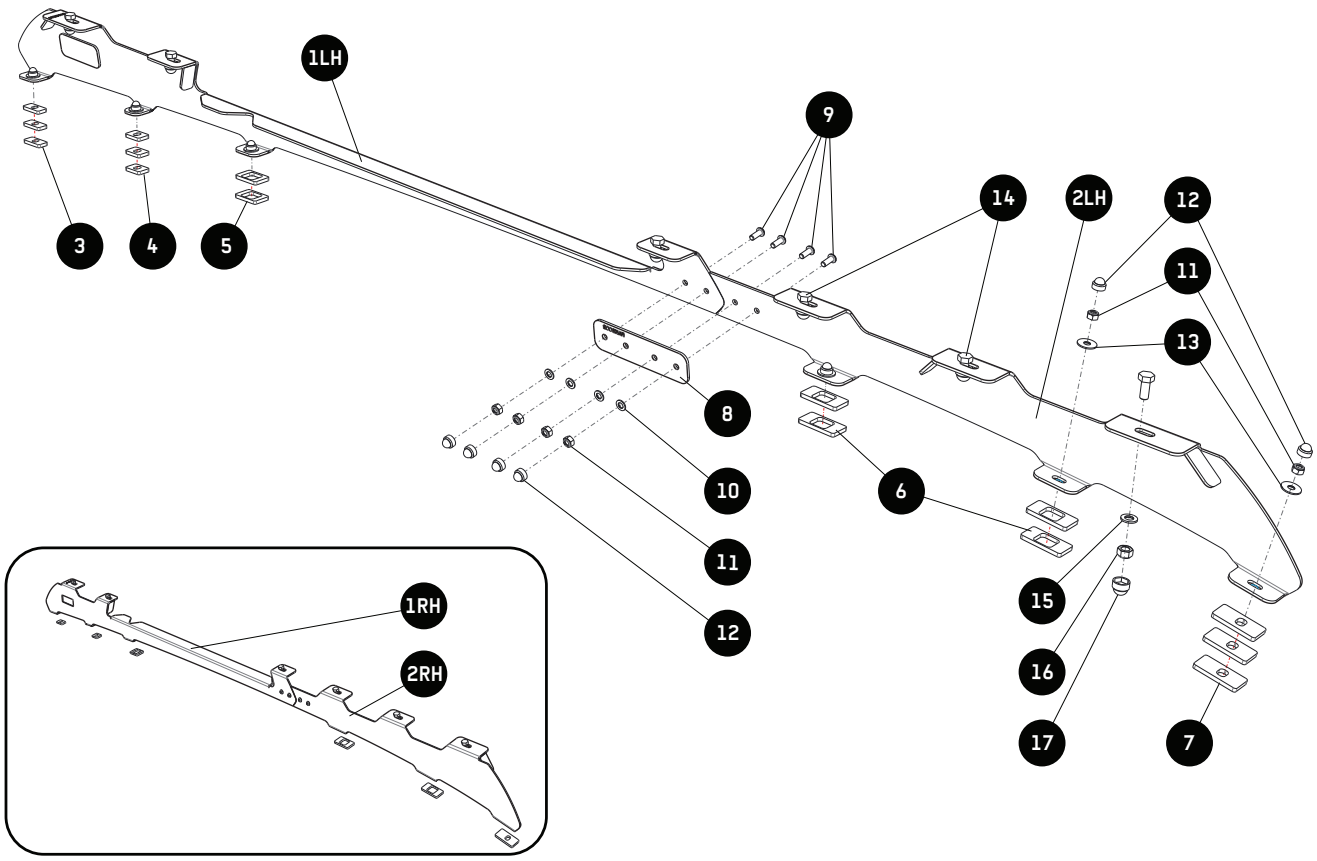

 © COPYRIGHT 2016 FRONT RUNNER VEHICLE OUTFITTERS

2 FIT AND SECURE

2.1

To achieve this installation you will need to remove the factory roof rails.

2.2

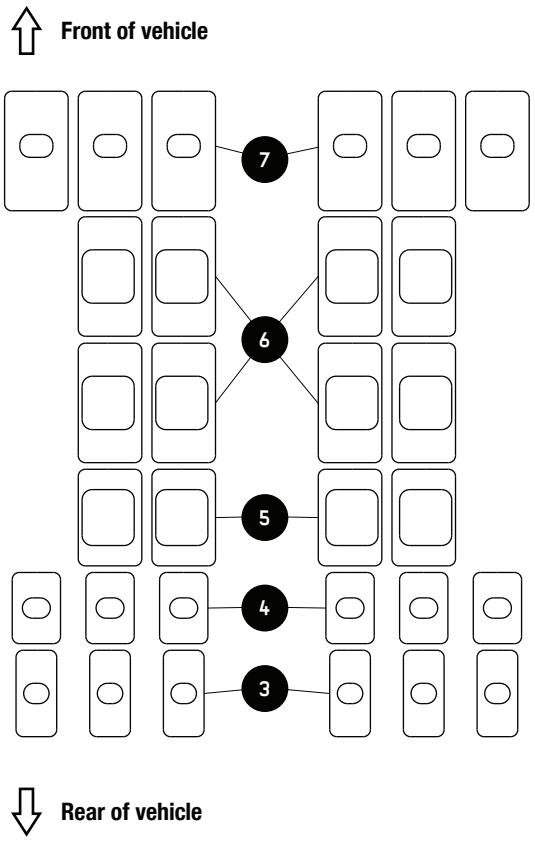

Stack the spacers accordingly into the recess of your vehicles roof.

2.4

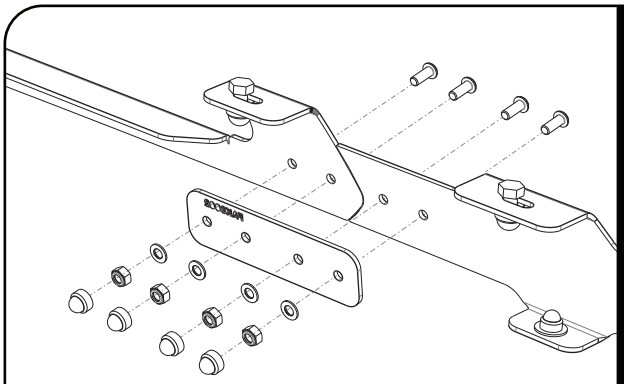

10mm

5mm

Place the two halves of the foot rail on to the spacers and join the 2 halfs with the supplied splice plate Item 8. Fasten as shown with Items 9, 10, 11.

2.5

Tighten all the nuts and bolts securing the foot rails to the vehicle's roof. Place a M6 Nut Cap (Item 12) over each of the M6 Nuts and Hex Bolts.

13mm

© COPYRIGHT 2016 FRONT RUNNER VEHICLE OUTFITTERS

3 FIT AND SECURE

3.1

Refer to RRSTUNI when assembling your Slimline II Tray.

3.2

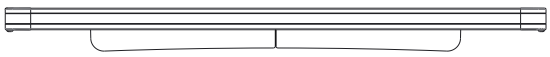

Make sure that the wind diflector is instaled before you proceed to the next step.

3.3

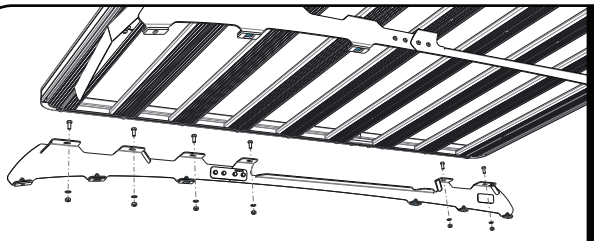

13mm

Fit and secure your roof rack to the foot rails with items 14, 15 and 16.

3.4

Centre the rack and tighten fully. Use M8 nut caps (Items 17) to finish off the nuts.

4 COMPLETION

4.1

Congratulations. You did it. Take a step back and admire your work!

5 INSTALL OTHER VEHICLE AND RACK ACCESSORIES

Now's the time to visit your favorite Front Runner Dealer in person or online.

© COPYRIGHT 2016 FRONT RUNNER VEHICLE OUTFITTERS