FRONT RUNNER
VEHICLE OUTFITTERS

JEEP WRANGLER JL (2018-CURRENT) FRONT BAR ROOF RACK MOUNT

ENG

FAJL004

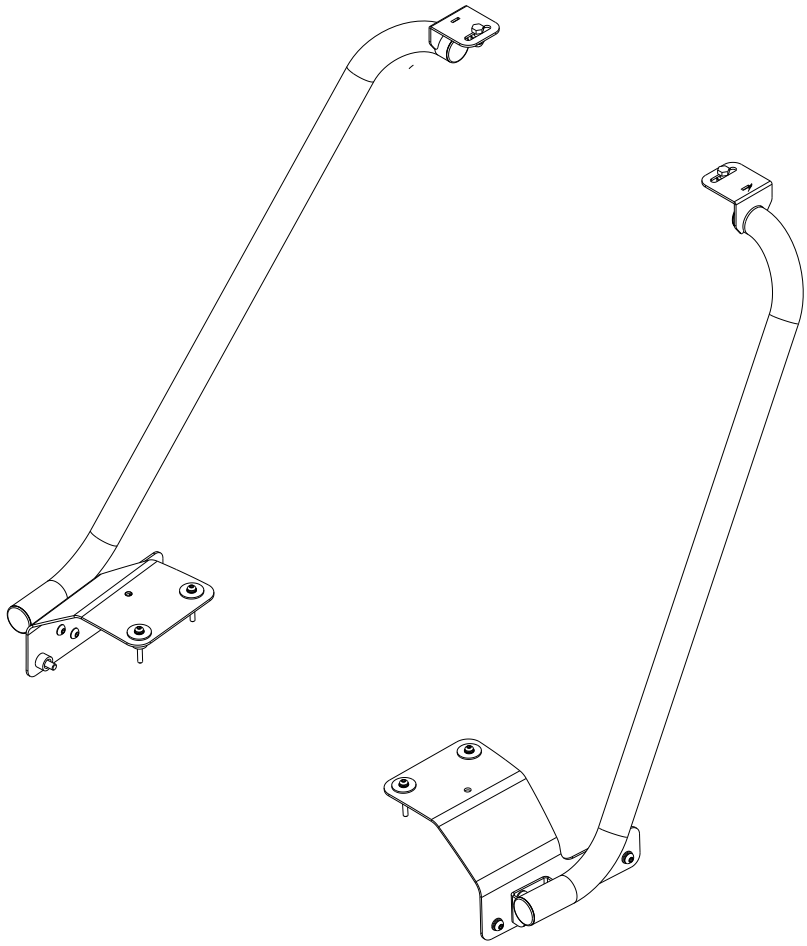

READ ME !

Thank you for purchasing a Front Runner Jeep Wrangler JL Front Bar Roof Rack Mount.

Before you start, take a moment to familiarize yourself with the Fitting Instructions and the components received.

Refer to Page 2 for a list of all the components, quantities and tools required.

NOTE: Front Runner will not be responsible for any damage caused by the failure to install the product according to these instructions. Please call us if you have any questions about the installation of this product.

IMPORTANT WARNING!

FRONT RUNNER CAN NOT RECOMMEND A MAXIMUM LOAD CARRYING CAPACITY. PLEASE REFER TO YOUR VEHICLE MANUFACTURER'S RECOMMENDATIONS. IT IS CRITICAL THAT ALL FRONT RUNNER PRODUCTS BE PROPERLY AND SECURELY ASSEMBLED AND ATTACHED TO YOUR VEHICLE. IMPROPER ATTACHMENT COULD RESULT IN AN AUTOMOBILE ACCIDENT, AND COULD CAUSE SERIOUS BODILY INJURY OR DEATH. YOU ARE RESPONSIBLE FOR ASSEMBLING AND SECURING ALL FRONT RUNNER PRODUCTS TO YOUR VEHICLE. CHECKING THE ATTACHMENTS PRIOR TO USE, AND PERIODICALLY INSPECTING THE PRODUCTS FOR ADJUSTMENT, WEAR AND DAMAGE. THEREFORE YOU MUST READ AND UNDERSTAND ALL OF THE INSTRUCTIONS AND PRECAUTIONS SUPPLIED WITH YOUR FRONT RUNNER PRODUCT PRIOR TO INSTALLATION OR USE. IF YOU DO NOT UNDERSTAND ALL OF THE INSTRUCTIONS AND CAUTIONS, OR IF YOU HAVE NO MECHANICAL EXPERIENCE AND ARE NOT THOROUGHLY FAMILIAR WITH THE INSTALLATION PROCEDURES, YOU SHOULD HAVE THE PRODUCT INSTALLED BY A PROFESSIONAL INSTALLER OR OTHER QUALIFIED PERSONNEL.

© 2020 FRONT RUNNER VEHICLE OUTFITTERS

1 GET ORGANIZED

IN THE BOX

1	1 X	LH Front Support Arm
2	10 X	M8 Flat Washer
3	6 X	M8 Nyloc Nut
4	6 X	M8 Nut Cap
5	4 X	M8 x 30 Button Head Screw
6	4 X	Spacer 19 x 12 x 15
7	4 X	Spacer 19 x 12 x 12
8	4 X	M8 x 16 Button Head Screw
9	2 X	Pillar Bracket 1LH+1RH
10	1 X	RH Front Support Arm
11	4 X	M6 x 50 Button Head Screw
12	4 X	M6 Flat Washer
13	4 X	M6 Large Washer
14	2 X	M8 x 20 Hex Head Bolt

TOOLS NEEDED

Torx Wrench
T40

Allen Key
4mm
5mm

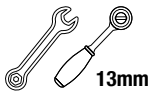
13mm

Thread
Lock

FIGURE 1.1

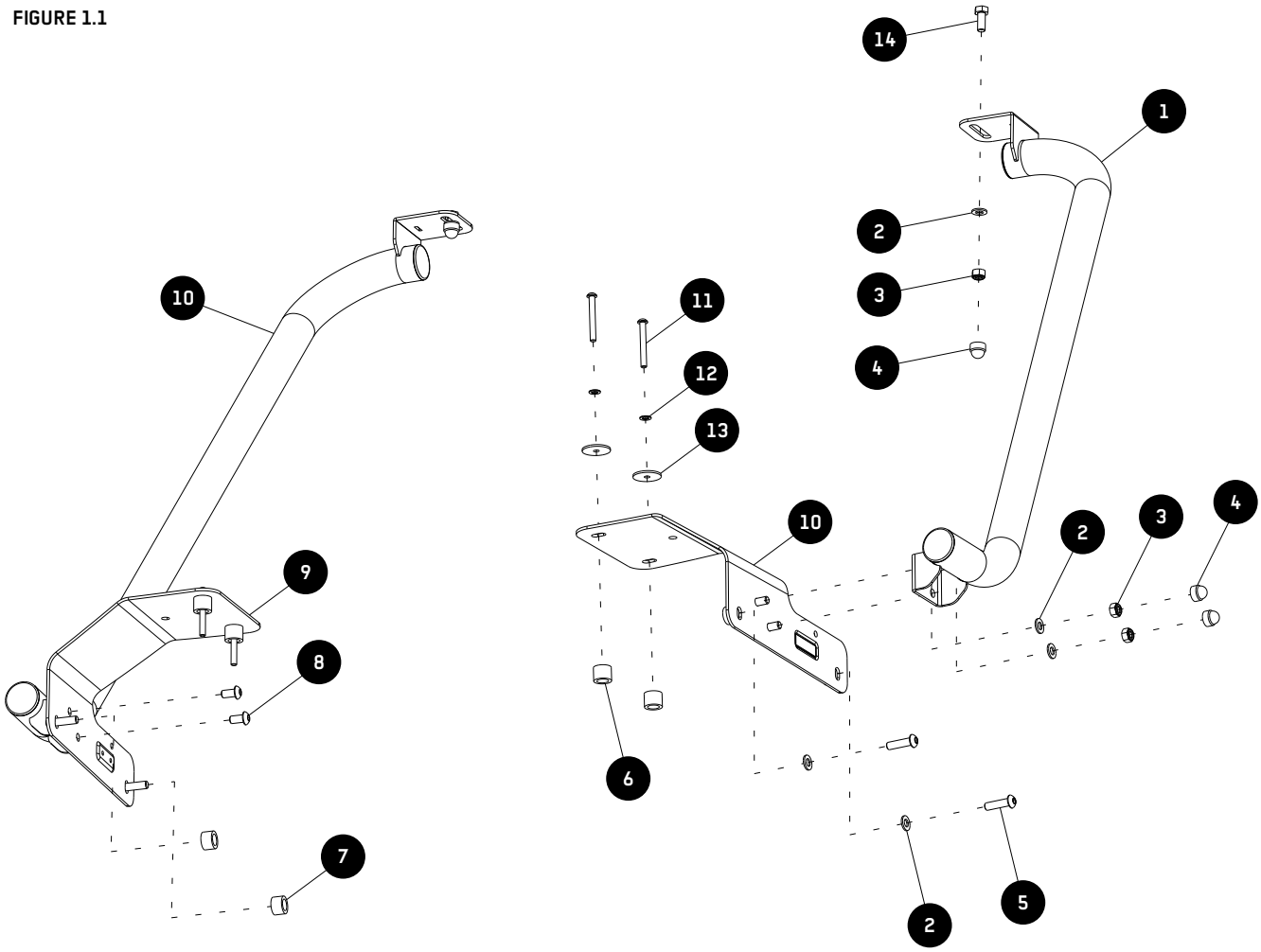

 © 2020 FRONT RUNNER VEHICLE OUTFITTERS

2 PREP FOR RACK INSTALL (FULL RACK)

2.1

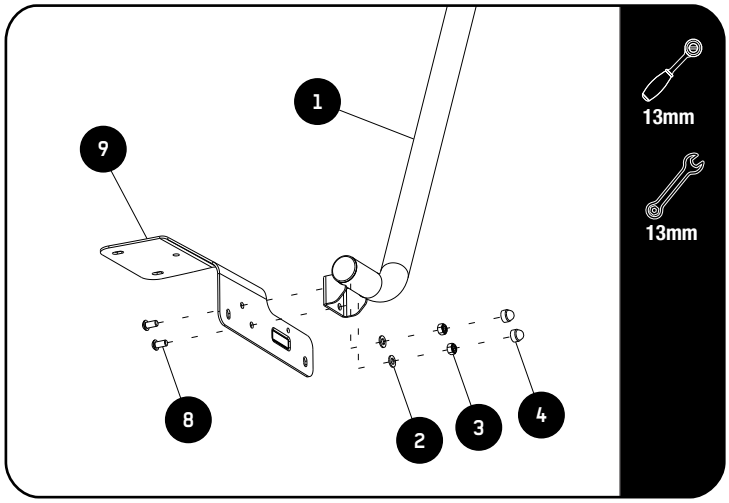

Assemble the LH Front Support Arm (Item 1) and the LH Pillar Bracket (Item 9) using two M8x16 Button Head Screws, two M8 Flat Washers and two M8 Nyloc Nuts (Item 8, 2 & 3). Finish of by placing two M8 Nut Caps (Item 4) over the M8 Nyloc Nuts.

Do this with th RH Front Support Arm (Item 10) and the RH Pillar Bracket (Item 1).

2.2

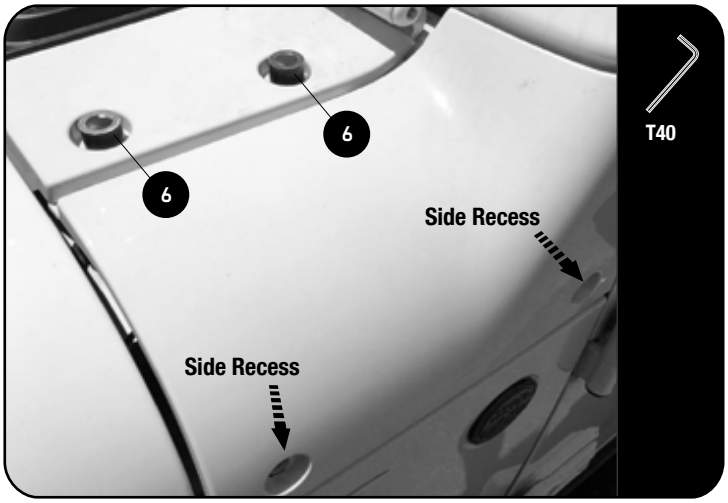

Using a T40 Torx Wrench, remove the four bolts holding the Corner Cover in place.

Place two Spacers 19x12x15 (Item 6) into the two top recesses as shown.

Do this on both sides of the vehicle.

2.3

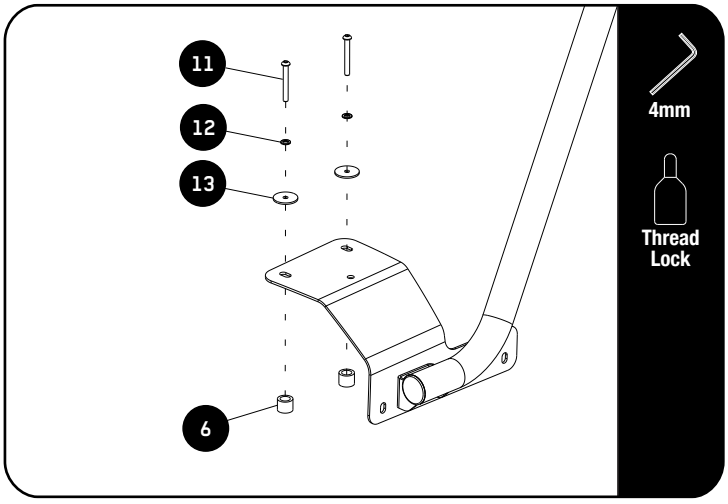

Apply a small bead of Thread Lock on the thread around the tip of the M6x50 Button Head Screws (Item 11).

Carefully place the Front Support Arm onto the two top Spacers (Item 6), aligning the holes in the Pillar Bracket with the holes on the vehicle.

Loosely assemble the Support Arm assembly to the vehicle using M6x50 Button Head Screws, M6 Flat Washers and M6 Large Flat Washers (Items 11, 12 & 13).

© 2020 FRONT RUNNER VEHICLE OUTFITTERS

2 PREP FOR RACK INSTALL (FULL RACK)

2.4

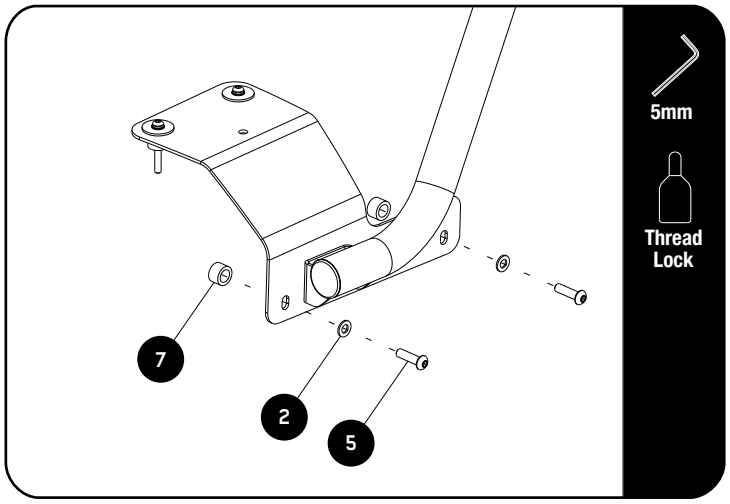

Place two Spacers 19x12x12 (Item 7) into the two side recesses shown in 2.2, between the Front Support Arm and the Corner Cover.

Apply a small bead of Thread Lock on the thread around the tip of the M6x30 Button Head Screws (Item 5).

Loosely assemble the Support Arm assembly using two M8x30 Button Head Screws and two M8 Flat Washers (Items 5 & 2).

Make sure the Support Arms are straight, using the door shut line as a guide.

Fully tighten the M8 Button Heads (Item 5) and then the M6 Button Heads (Item 11) on top.

2.5

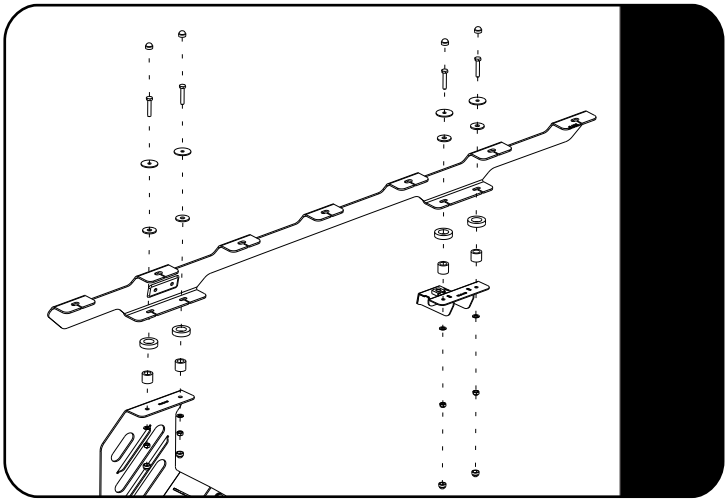

Before moving to the next step you need to install the Inner and Middle Support Brackets.

Refer to FAJL002 & FAJL003 Fitment Guides.

2.6

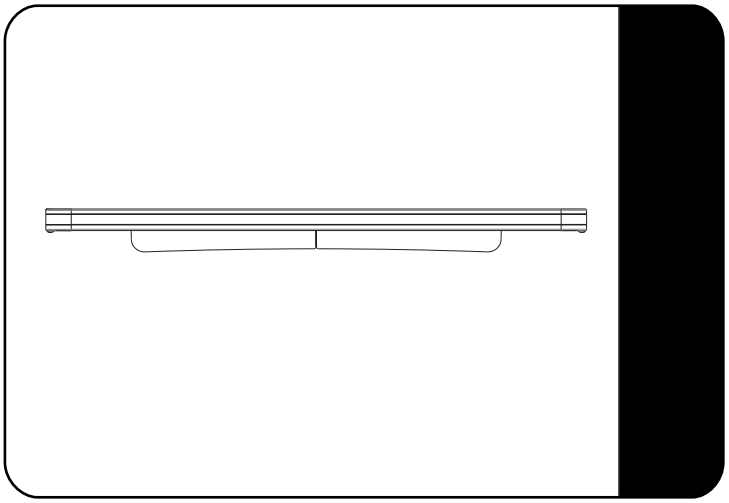

If not already assembled, assemble your Tray as per the Universal Tray Assembly Instructions.

Make sure that the wind deflector is installed before you proceed to the next step.

Refer to Universal Tray Assembly Instructions (Document RRSTUNI)

 © 2020 FRONT RUNNER VEHICLE OUTFITTERS

2 PREP FOR RACK INSTALL (FULL RACK)

2.7

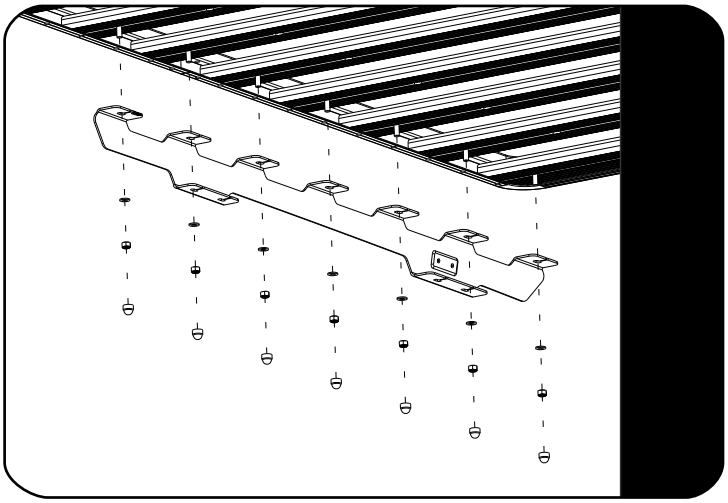

Fit your Roof Rack to the Inner and Middle Support Brackets.

Refer to FAJL002 & FAJL003 Fitment Guides.

2.8

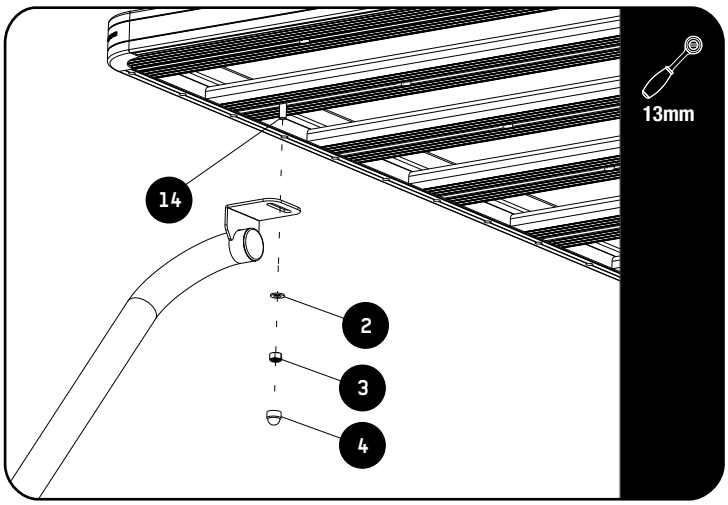

Fit your Roof Rack to the Front Support Arms using M8x20 Hex Head Bolts, M8 Flat Washers and M8 Nyloc Nuts (Items 14, 2 & 3) as shown.

Center the rack and fully tighten. Finish off by placing M8 Nut Caps (Item 4) over the M8 Nyloc Nuts.

3 INSTALL OTHER VEHICLE AND RACK ACCESSORIES

Now's the time to visit your favorite Front Runner Dealer in person or online.

IMPORTANT! ⚠

FRONT RUNNER RACK KITS OFTEN HAVE A HIGHER LOAD RATING THAN THE VEHICLES THEY ARE MOUNTED TO. PLEASE REFER TO YOUR SPECIFIC VEHICLE MANUFACTURER FOR A RECOMMENDED ROOF RATING. FRONT RUNNER CANNOT BE RESPONSIBLE FOR IMPROPER LOADING BEYOND THE VEHICLE MANUFACTURER'S STATED LOAD CAPACITY.

Be sure to tag us. We love to see our gear in action! #FrontRunnerOutfitters #BornToRoam

Share your adventures on:

© 2020 FRONT RUNNER VEHICLE OUTFITTERS