START HERE!

READ ME FIRST

Don't be a hero and muscle through this without first reading these fitting instructions! Improper installation of this gear may void certain aspects of your warranty.

Before you begin, take a moment and open all your Front Runner rack kit boxes and gather the assembly instructions for the various components.

A complete kit will contain:

1. A Front Runner Mounting System specific to your vehicle
2. A Front Runner Rack Tray or Load Bar Slats

This document will guide you through the assembly of the mounting system and assist you in fitting the roof rack tray or load bars to your specific vehicle.

Please refer to the next page for a list of all the components, quantities and tools required.

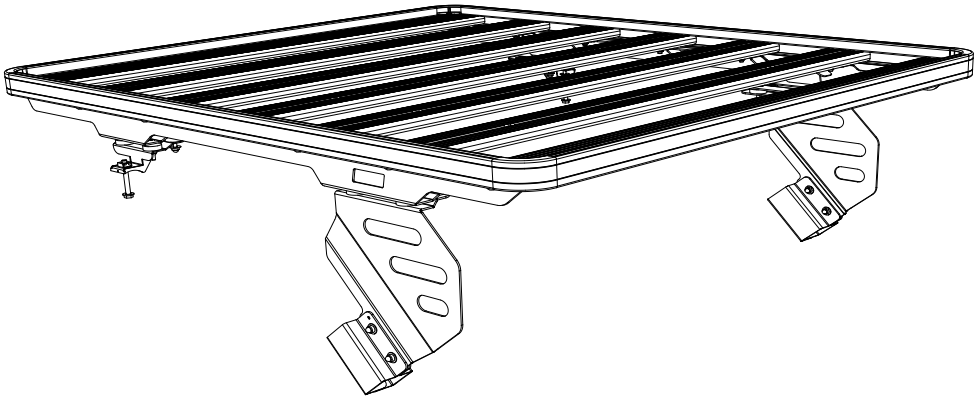

180 min

IMPORTANT WARNING! ⚠

FRONT RUNNER CAN NOT RECOMMEND A MAXIMUM LOAD CARRYING CAPACITY. PLEASE REFER TO YOUR VEHICLE MANUFACTURER'S RECOMMENDATIONS. IT IS CRITICAL THAT ALL FRONT RUNNER PRODUCTS BE PROPERLY AND SECURELY ASSEMBLED AND ATTACHED TO YOUR VEHICLE. IMPROPER ATTACHMENT COULD RESULT IN AN AUTOMOBILE ACCIDENT, AND COULD CAUSE SERIOUS BODILY INJURY OR DEATH. YOU ARE RESPONSIBLE FOR ASSEMBLING AND SECURING ALL FRONT RUNNER PRODUCTS TO YOUR VEHICLE. CHECKING THE ATTACHMENTS PRIOR TO USE, AND PERIODICALLY INSPECTING THE PRODUCTS FOR ADJUSTMENT, WEAR AND DAMAGE. THEREFORE YOU MUST READ AND UNDERSTAND ALL OF THE INSTRUCTIONS AND PRECAUTIONS SUPPLIED WITH YOUR FRONT RUNNER PRODUCT PRIOR TO INSTALLATION OR USE. IF YOU DO NOT UNDERSTAND ALL OF THE INSTRUCTIONS AND CAUTIONS, OR IF YOU HAVE NO MECHANICAL EXPERIENCE AND ARE NOT THOROUGHLY FAMILIAR WITH THE INSTALLATION PROCEDURES, YOU SHOULD HAVE THE PRODUCT INSTALLED BY A PROFESSIONAL INSTALLER OR OTHER QUALIFIED PERSONNEL.

 © COPYRIGHT 2017 FRONT RUNNER VEHICLE OUTFITTERS

1 GET ORGANIZED

FAJK002

IN THE BOX

1	2 X	Inner Roll Bar Clamp
2	2 X	Outer Roll Bar Clamp
3	28 X	M6 x 19 x 1SS Flat Washer
4	16 X	Foam Seal Washer
5	16 X	Aluminum Spacer
6	16 X	M6 x 30 Hex Bolt
7	20 X	M6 Nyloc Nut
8	8 X	M6 x 20 Hex Bolt
9	20 X	M6 Nut Cap
10	16 X	M6 x 19 x 1SS Flat Washer
11	2 X	Rear Support Bracket - 1LH + 1RH
12	2 X	M8 x 75 Hex Bolt
13	2 X	M8 Large Washer
14	2 X	Middle Support Bracket - 1LH + 1RH
15	16 X	Sealing Plug Assembly

TOOLS NEEDED

10MM
13MM

10MM
13MM

Torx Wrench
T40

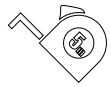

6mm
22mm (7/8") Hole Saw

FIGURE 1.1

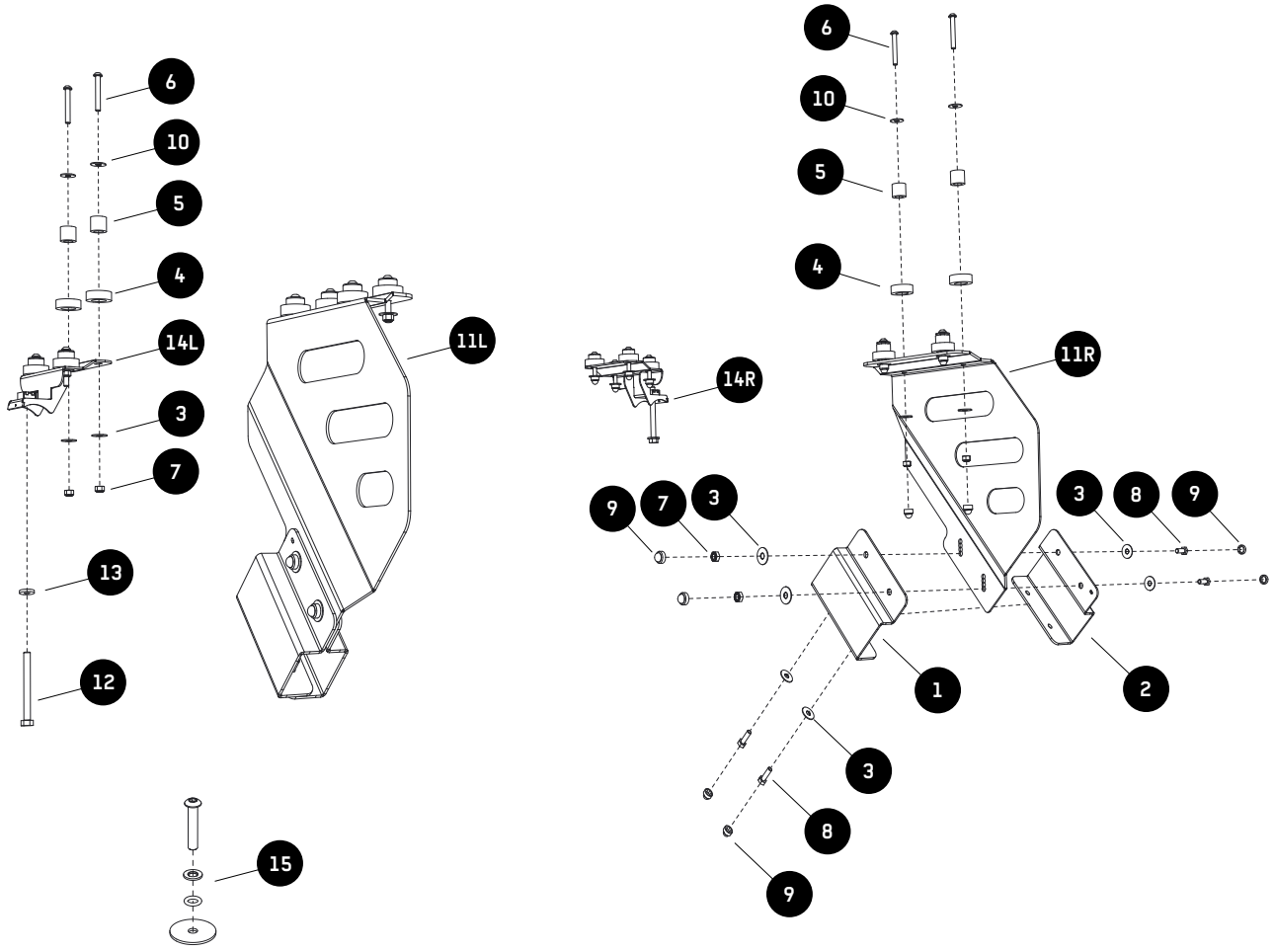

 © COPYRIGHT 2017 FRONT RUNNER VEHICLE OUTFITTERS

1 GET ORGANIZED

FAJK006

IN THE BOX		
16	14 X	M8 X 16 Hex Bolt
17	2 X	Foot Rail - 1LH + 1RH
18	14 X	M8 x 16 x 1.6SS Flat Washer
19	14 X	M8 Nyloc Nut
20	14 X	M8 Nut Cap

FIGURE 1.2

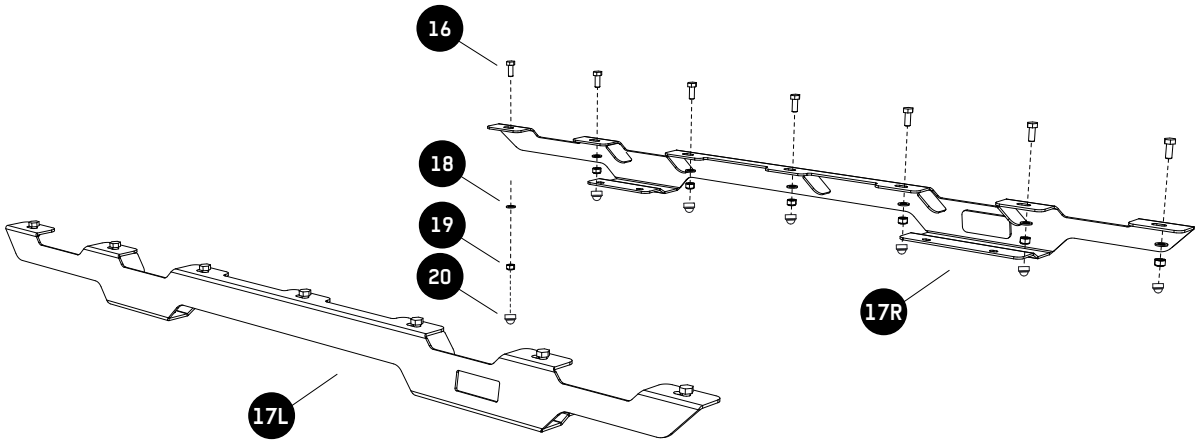

 © COPYRIGHT 2017 FRONT RUNNER VEHICLE OUTFITTERS

2 PREP FOR INSTALLATION OF INNER BRACKETS (FAJK002)

2.1

Loosen velcro, unzip and remove the padding covering the roll bars.

Remove the wiring harness and plastic clip from the roll bar.

2.2

Locate the two threaded holes on the underside of the roll bar and fasten the two halves of the Roll Bar Clamps (Items 1 & 2) to the roll bar using M6 x 19 z 1SS Flat Washers and M6 x 20 Hex Bolts (Items 3 & 8). Place the Outer Roll Bar Clamp (Item 2) first followed by the Inner Roll Bar Clamp (Item 2).

2.3

Loosely attach the Rear Support Arms (item 11) to the outside of the Roll Bar Clamps using items M6 x 20 Hex Bolts, M6 x 19 x 1SS Flat Washers and M6 Nyloc Nuts (Items 3, 7 & 8). Make sure the foot faces the inside of the vehicle and the contours of the foot match the contours of the roof as shown.

Mark the position of the four holes in the foot on the roof.

Once the holes have been marked remove the Rear Support Arms.

Pilot drill the marked holes using a 6mm drill bit.

 © COPYRIGHT 2017 FRONT RUNNER VEHICLE OUTFITTERS

3 PREP AND INSTALLATION OF FOOT RAILS (FAJK006)

3.1

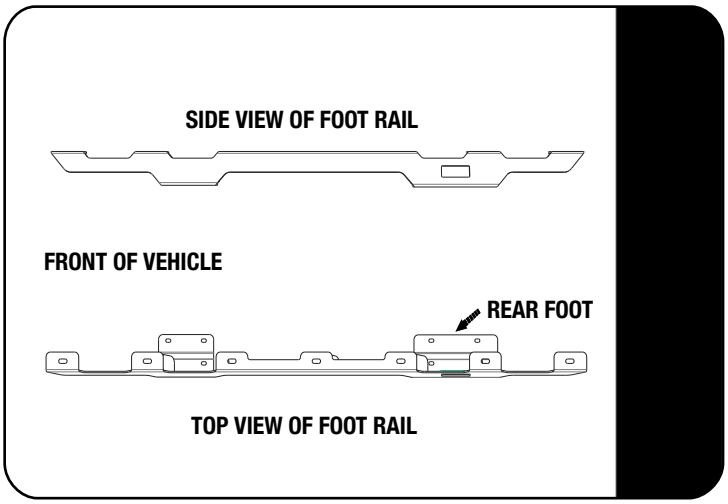

Locate the Foot Rail in position by lining up the holes in the bracket with the holes drilled in Step 2.3.

Place a M6 x 30 Hex Bolt (item 6) into each hole to keep its location.

3.2

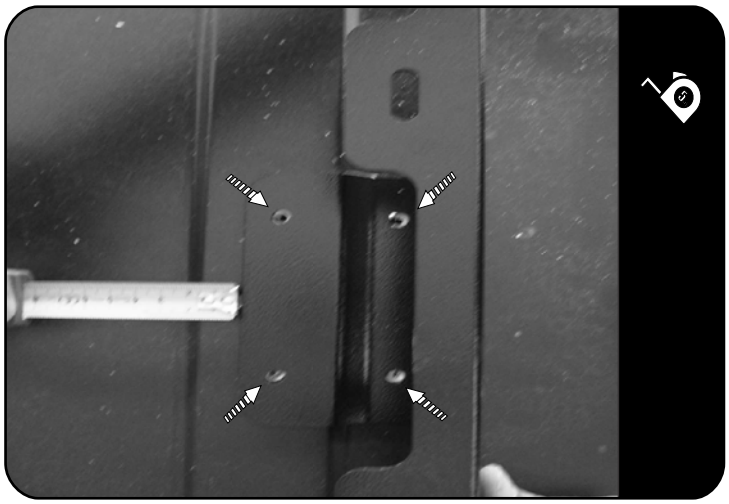

Using a measuring tape and a rib in the roof as a reference, adust the front of the bracket so that the entire length of the bracket is parallel with your reference rib.

3.3

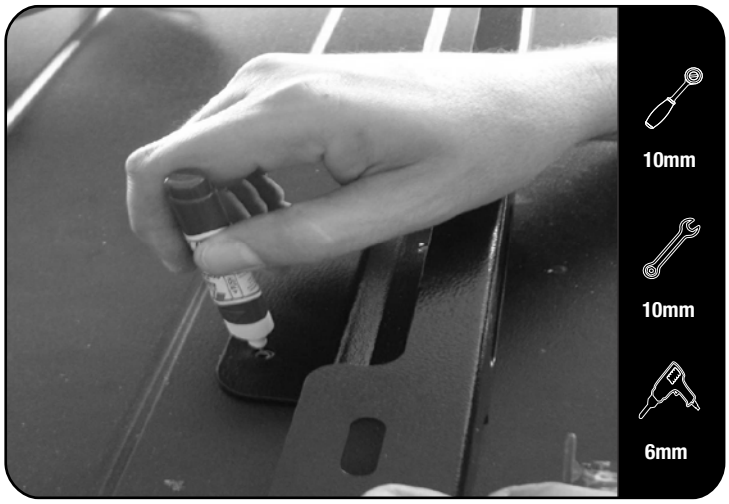

Once you are happy with your measurements and alignment, mark the four holes in the foot of the Foot Rail onto the roof.

Remove the Foot Rail.

From outside the vehicle, using your 6mm drill bit, drill the four pilot holes through the marks you just made.

Repeat Step 2.1 to 3.3 for the opposite side.

 © COPYRIGHT 2017 FRONT RUNNER VEHICLE OUTFITTERS

3 FIT AND SECURE

3.4

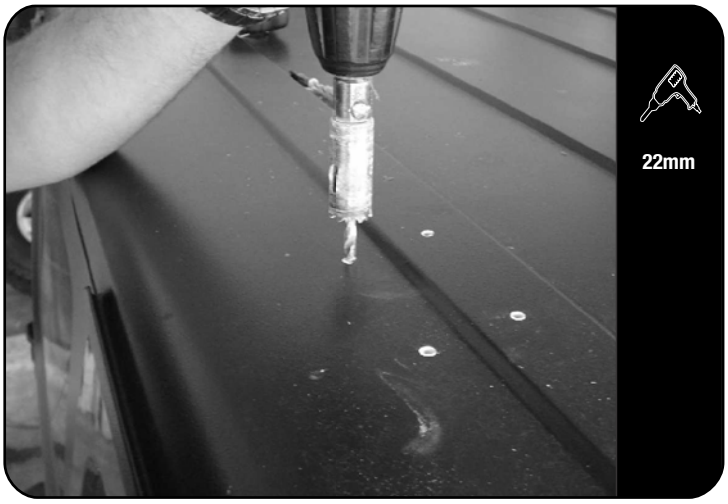

TIP - It is easier to do the next step if you remove the roof.

Change from the 6mm drill bit to a 22mm hole saw. From the outside of the vehicle drill all the 6mm holes (16 in total) out to 22mm. Let the drill do the work. You do not want to scratch or damage your vehicle's roof. You may wish to have a friend inside the vehicle with a vacuum cleaner underneah where you are drilling to catch all the dust and keep your vehicle clean.

3.5

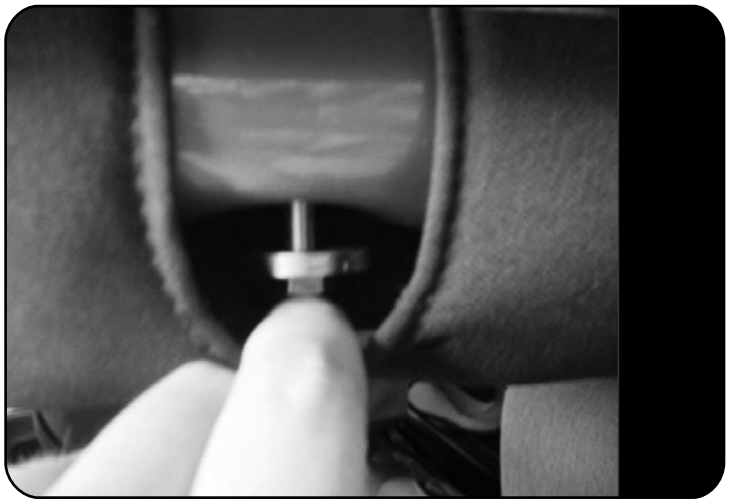

Pull back the padding around the roll bar above the rear seats and insert an M8 x 75 Hex Bolt and M8 Large Washer (Items 12 & 13 from FAJK002 box) through the hole as shown.

3.6

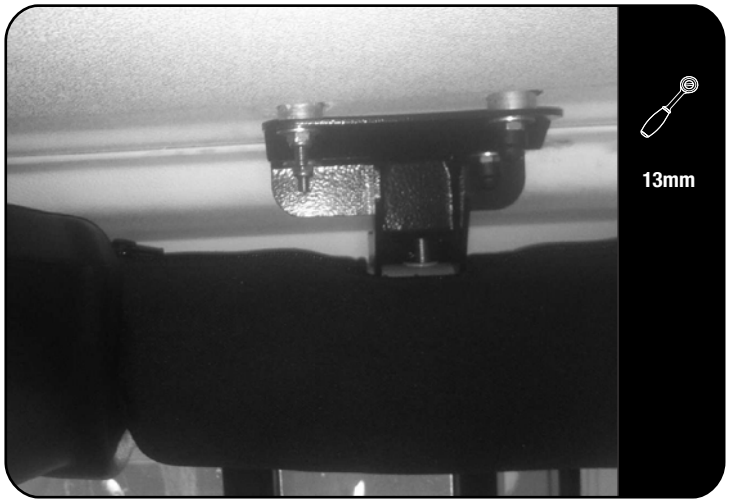

From the inside of the vehicle, in the same position as where you just inserted the bolt in Step 3.5, push the Middle Support Bracket (Item 14) through the hole in the roll bar padding and loosely fasten it to the roll bar.

Please note that there is a left hand and right hand bracket. The arrow on the bracket must point to the rear of the vehicle.

 © COPYRIGHT 2017 FRONT RUNNER VEHICLE OUTFITTERS

4 INSTALLATION OF REAR SUPPORT ARMS

4.1

Refit and fasten the Rear Support Arms as in Step 2.3

NOTE: Use the worm slots to adjust the height of the rear support brackets. This will be important to create a weatherproof Seal.

5 PREP FOR RACK INSTALL (FAJK002)

5.1

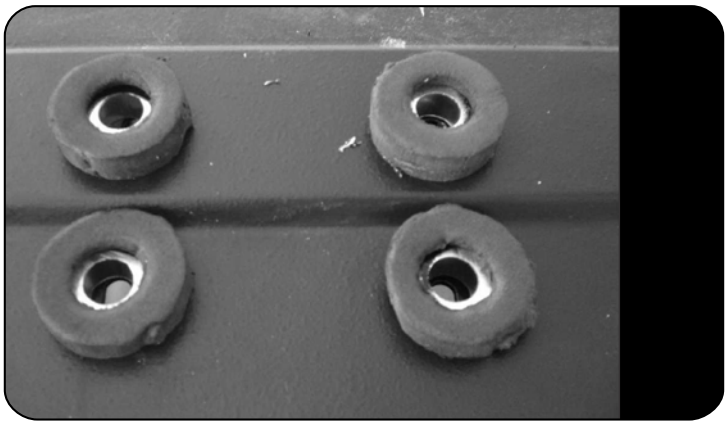

Clean the area around all the 22mm holes drilled in the roof with a rag and methylated spirits/denatured alcohol.

Insert the Aluminum Spacers (Item 5) into the Foam Washer (Item 4). Remove the paper backing from the Foam washer to expose the adhesive.

Insert the washer/spacer combination, adhesive side down, into the 22mm holes so that the spacer comes to rest on the Rear Support Brackets underneath.

Firmly press the foam washer all the way around securing it to the roof.

5.2

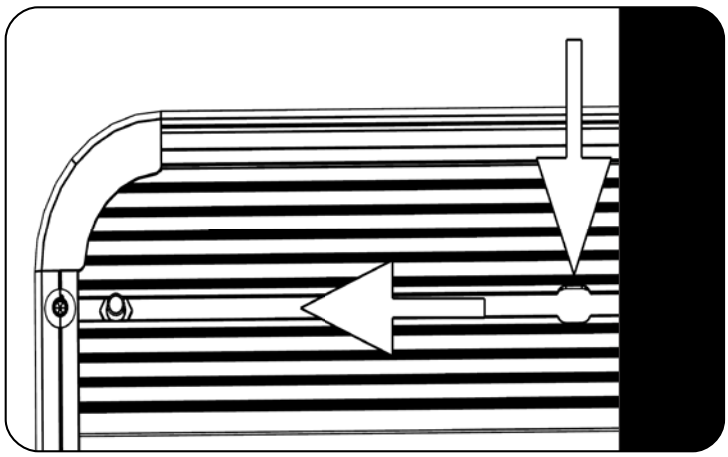

If not already assembled, assemble your Tray as per the Universal Tray Assembly Instructions (Document RRSTUNI)

NOTE: Before fitting the Wind Deflector, insert two M8 x 16 Hex Bolts (Item 16 from FAJK006) or (Item 1 from FAJK003) into the first slat (Combined Slat), using the Machined slots. Slide a bolt to each of the outer corners.

 © COPYRIGHT 2017 FRONT RUNNER VEHICLE OUTFITTERS

5 PREP FOR RACK INSTALL (HALF RACK)

5.3

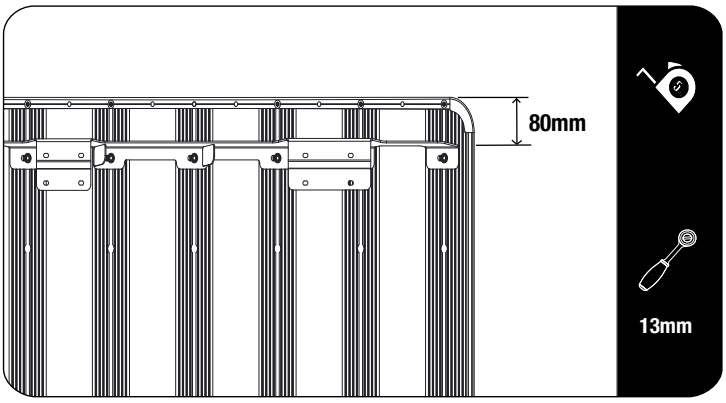

After fitting the wind deflectors, the tray should still be upside down, loosely mount the Foot Rails (Item 17L & 17R from FAJK006 box) to the Tray using M8 x 16 Hex Bolts, M8 X 16 X 1.6SS Flat Wahsers and M8 Nyloc Nuts (items 16, 18 & 19?. As before use the machined slots to insert the hex bolts into the Slats. The Foot Rail should be mounted at the opposite end of the Tray to the wind deflector.

The rear of the Foot Rail must mount onto the very last Slat (Combined Slat) and approximately 80mm in from the outer edge of the side of the Tray. Do not tighten the bolts yet.

6 MOUNT YOUR TRAY

6.1

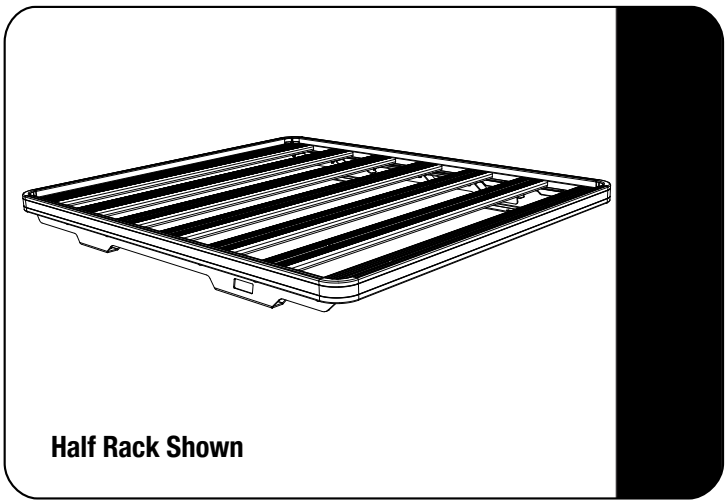

With the help of a friend, flip the Tray end over end so that it is in the upright position. (The Tray is flipped end over end so that bolts and brackets do not slide left and right).

With one of you on either side of the Tray, lift the Tray and walk it into position above the vehicle, approaching from either the front or the rear of the vehicle.

6.2

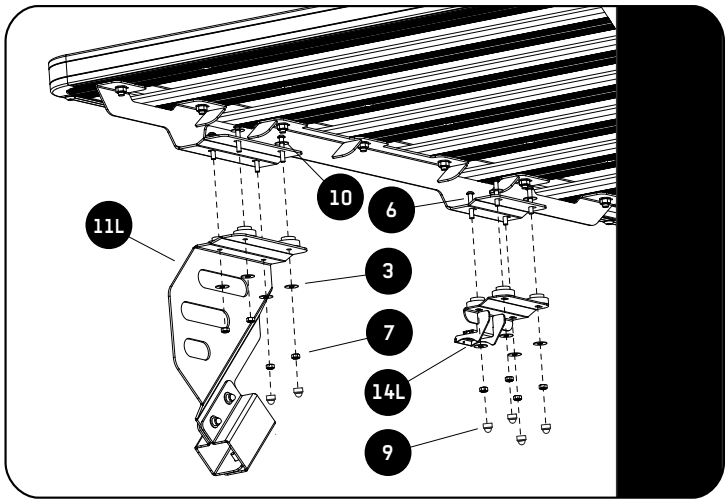

The Foot Rail should still be loose enough to move. Line the brackets up with the holes on the roof and fasten them into position using M6 x 19 x 1SS Flat Washers, M6 x 30 (Items 3, 6, 7 & 10 from FAJK002 box). Centre the tray from left to right. Use a tape measure to double check. Once you are happy that the Tray is in the correct position, fasten all the nuts and bolts, both inside and outside of the vehicle on all brackets that were installed.

Fit the Plastic Nut Caps (Item 9 from FAJK002 box) provided over all the exposed bolts and close up all the roll bar padding.

 © COPYRIGHT 2017 FRONT RUNNER VEHICLE OUTFITTERS

7 REMOVING YOUR RACK

7.1

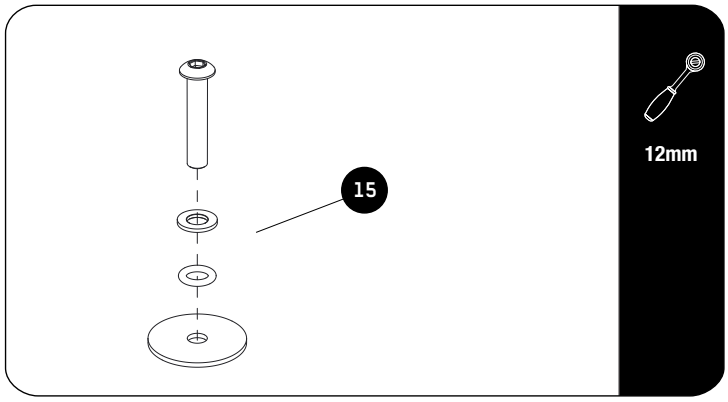

Should you wish to remove your rack, you will need to plug the holes you drilled in the roof (Step 3.4), using the supplied Sealing Plug Assemblies.

Remove the Tray, Front Uprights and the Foot Rail, by reversing the instillation procedure. Leave the Foam Washer and the Aluminum Spacers in place. Screw in the Sealing Plugs reusing the M6 Nyloc Nuts and Washers that held the Foot Rail in position.

8 TAKE A TRIP

8.1 After your first adventure, check that all nuts, bolts, screws and fittings are tight. Re-tighten where needed. You'll find a small amount of settling has happened.

Go on many more adventures, periodically checking all nuts, bolts, screws and fittings.

⚠ Front Runner can not recommend a maximum load carrying capacity. Please refer to your vehicle manufacturer's recommendations

 © COPYRIGHT 2017 FRONT RUNNER VEHICLE OUTFITTERS

9 COMPLETION

9.1

Congratulations. You did it. Take a step back and admire your work!

10 INSTALL OTHER VEHICLE AND RACK ACCESSORIES

Now's the time to visit your favorite Front Runner Dealer in person or online.

 © COPYRIGHT 2017 FRONT RUNNER VEHICLE OUTFITTERS