FRONT RUNNER

JEEP JK (3 DOOR) SLIMLINE II - FULL TRAY EXTREME RACK KIT

ENG

FAJK005 / KRJW016T

INSTALL TIME: 5 Hours

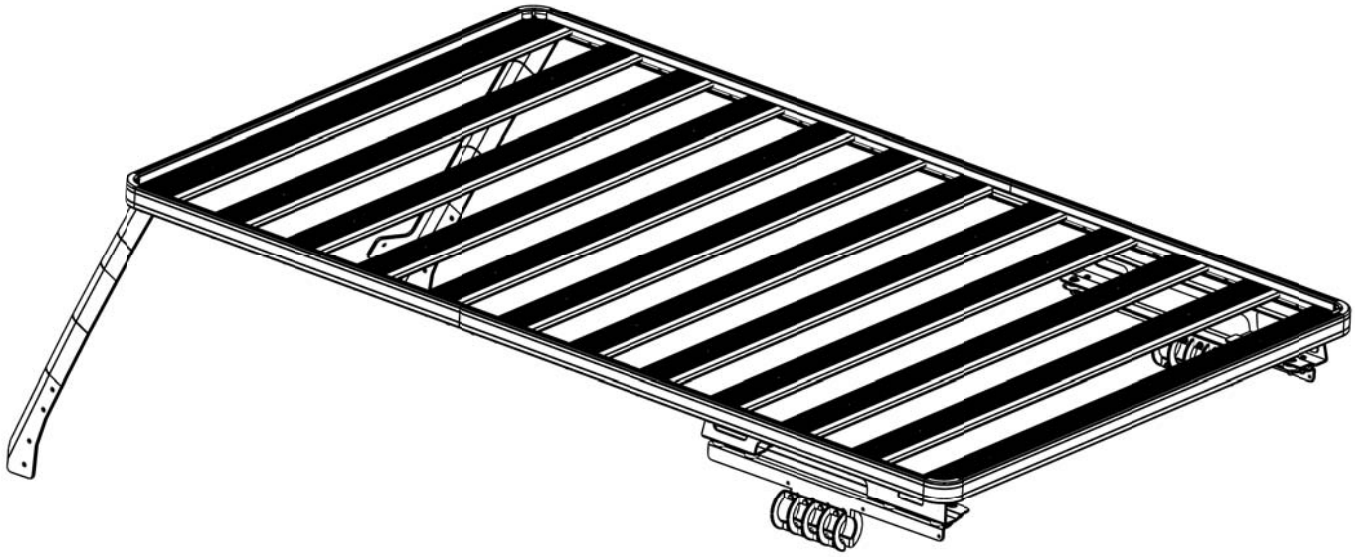

NOTE: Your Jeep JK (3 Door) Extreme Roof Rack Kit consists of four boxes. (1) the Tray, (2) the Roll Bar Brackets (FAJK005), (3) the Front Upright Supports (FAJK003) and (4) the Tray Support Brackets (FAJK004).

IMPORTANT WARNING!

IT IS CRITICAL THAT ALL FRONT RUNNER PRODUCTS BE PROPERLY AND SECURELY ASSEMBLED AND ATTACHED TO YOUR VEHICLE. IMPROPER ATTACHMENT COULD RESULT IN AN AUTOMOBILE ACCIDENT, AND COULD CAUSE SERIOUS BODILY INJURY OR DEATH TO YOU OR TO OTHERS. YOU ARE RESPONSIBLE FOR ASSEMBLING AND SECURING ALL FRONT RUNNER PRODUCTS TO YOUR VEHICLE, CHECKING THE ATTACHMENTS PRIOR TO USE, AND PERIODICALLY INSPECTING THE PRODUCTS FOR ADJUSTMENT, WEAR, AND DAMAGE. THEREFORE, YOU MUST READ AND UNDERSTAND ALL OF THE INSTRUCTIONS AND CAUTIONS SUPPLIED WITH YOUR FRONT RUNNER PRODUCT PRIOR TO INSTALLATION OR USE. IF YOU DO NOT UNDERSTAND ALL OF THE INSTRUCTIONS AND CAUTIONS, OR IF YOU HAVE NO MECHANICAL EXPERIENCE AND ARE NOT THOROUGHLY FAMILIAR WITH THE INSTALLATION PROCEDURES, YOU SHOULD HAVE THE PRODUCT INSTALLED BY A PROFESSIONAL INSTALLER OR OTHER QUALIFIED PERSONNEL.

© COPYRIGHT 2014 FRONT RUNNER VEHICLE OUTFITTERS

1 GET ORGANIZED

Your ROLL BAR BRACKET box (FAJK005) contains:

Item #	Quantity	Description
1	2	REAR SUPPORT BRACKET PART A
2	2	REAR SUPPORT BRACKET PART B - (1 LEFT, 1 RIGHT)
3	32	M6 FLAT WASHER
4	32	M6 NYLOC NUT
5	16	FOAM WASHER
6	16	ALUMINUM SPACER
7	16	M6 FLAT WASHER
8	16	M6 x 30 HEX BOLT
9	16	M6 NUT CAP

*** 16 x Sealing Plug (Not pictured - Refer to Step 7)**

You will need:

- a 3 door Jeep Wrangler
- a Measuring Tape
- a 13mm Flat and 13mm Socket Wrench
- a T40 Torx Wrench
- a Drill Machine
- a 6mm Drill Bit
- a 22mm (7/8") Hole Saw
- a Step Ladder
- a Black and a White Marker
- a Rag and Methylated Spirits/ Denatured Alcohol
- a Dust Cover or Blanket
- Masking Tape
- a suitable piece of wood or steel for Step 3E
- a Friend
- a clean dry work area near your Jeep

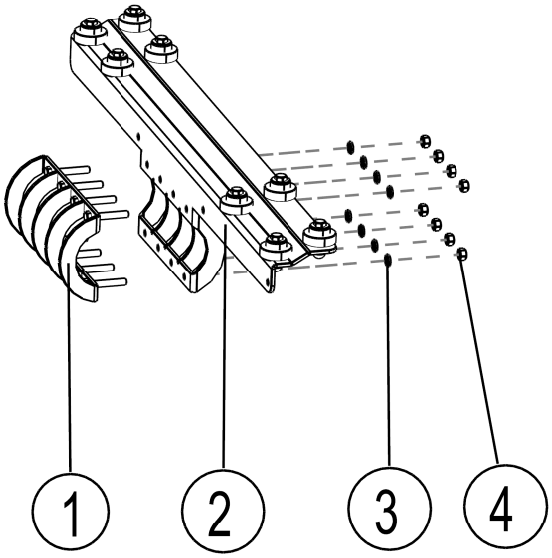

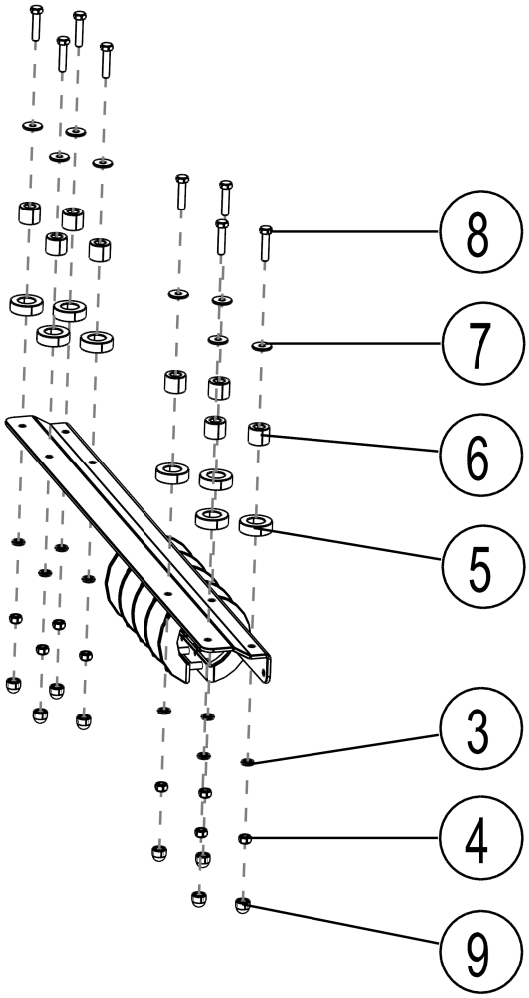

© COPYRIGHT 2014 FRONT RUNNER VEHICLE OUTFITTERS

1 GET ORGANIZED...CONT.

Your TRAY SUPPORT BRACKET box (FAJK004) contains:

Item #	Quantity	Name
10	8	M8 x 16 HEX BOLT
11	8	M8 FLAT WASHER
12	8	M8 NYLOC NUT
13	2	TRAY SUPPORT BRACKET - (1 LEFT, 1 RIGHT)

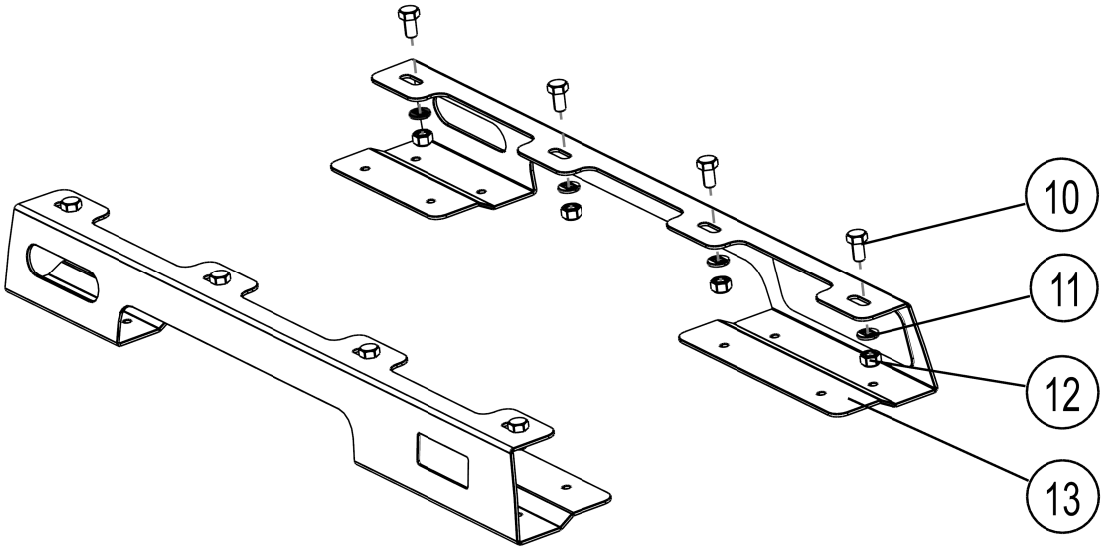

Your FRONT UPRIGHT SUPPORT box (FAJK003) contains:

Item #	Quantity	Description
14	2	M8 x 20 HEX BOLT
15	2	M8 FLAT WASHER
16	2	M8 NYLOC NUT
17	2	FRONT UPRIGHT - (1 LEFT, 1 RIGHT)

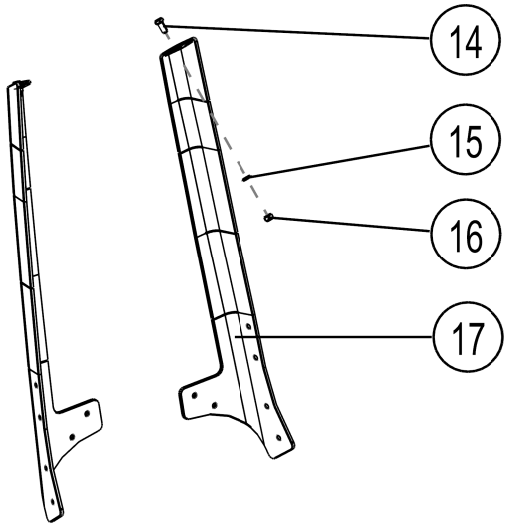

(A) **Familiarize yourself with the parts and then step away from the work area and read through these instructions from beginning to end. Grab a cup of coffee and take a moment. A little prep now may save you a lot of time later.**

© COPYRIGHT 2014 FRONT RUNNER VEHICLE OUTFITTERS

2 REMOVE AND DRILL ROOF

(A) **Remove the two Front T-top Roofs.**

Disconnect the power socket and water pipe in the back left corner of the vehicle.

(B) **Using a T40 Torx Wrench, remove the six Torx Bolts holding the rear roof to the vehicle body.**

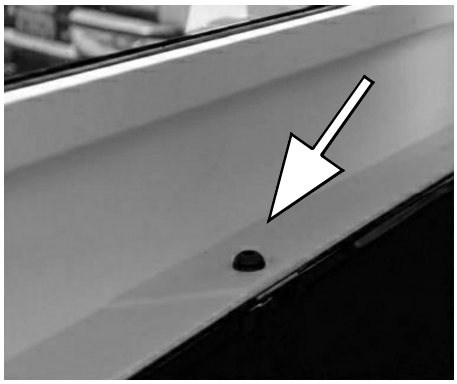

(C) **Using the T40 Torx Wrench, remove the two Torx Bolts, either side of the front seat headrests, holding the rear roof to the vehicle body.**

Grab a friend to help you lift the roof off and place it on a blanket or suitable work surface on the ground as not to damage it.

© COPYRIGHT 2014 FRONT RUNNER VEHICLE OUTFITTERS

2 REMOVE AND DRILL ROOF...CONT. (FAJK004)

(D) Place the left and right Tray Support Brackets (Item 13) in position on the corresponding outer ribs as shown below. Mark the position of the four "feet" using a suitable marker. Remove the brackets. Using masking tape, tape the marked area on the roof where the four "feet" sat. (This is done to help protect your vehicle's roof when drilling in Step 2E.)

Place the brackets back in position, making sure to line up the shape of the brackets to the shape of the roof.

Using a measuring tape, adjust the brackets so that the centre of the two holes, as indicated by the arrows, are 130mm in from the rear edge of the roof and in the centre of the roof rib. Ensure that the other three inside holes are also in the centre of the roof rib. Take a suitable marking pen and mark the position of all the holes onto the roof.

Remove the brackets and check that the inner row of holes are running in a straight line down middle of the rib. If they do not look straight, stop and re-mark before you start drilling. Remember measure twice, drill once.

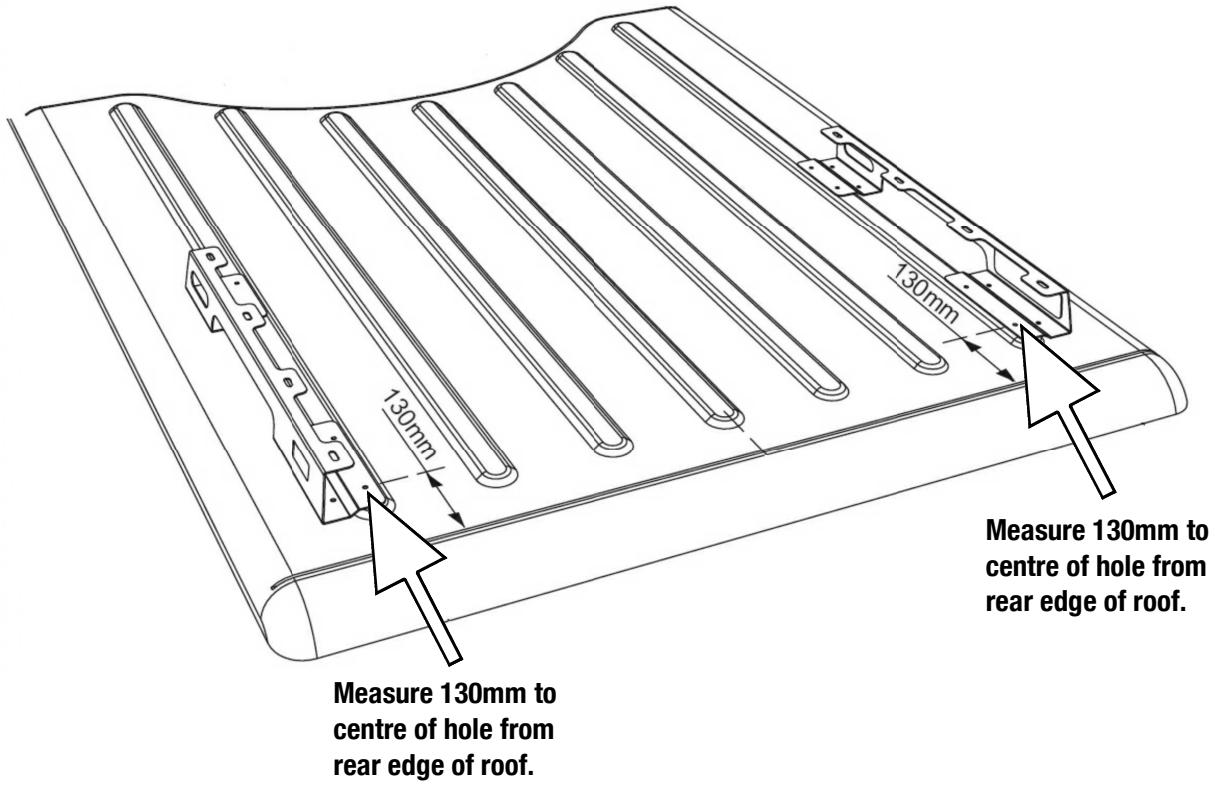

(E) Using your drill machine and a 22mm Hole Saw, drill all the marked holes to 22mm.

There is NO NEED for a lot of downward pressure. Let the drill do the work. Your job is to keep the drill steady. You don't want it slipping across your roof and scratching it!

© COPYRIGHT 2014 FRONT RUNNER VEHICLE OUTFITTERS

3 PREP AND INSTALL REAR SUPPORT ARMS (FAJK005)

(A) **Remove the speaker box so that you have access to the zips and padding that cover the vehicles roll bars.**

This is done by removing the the six bolts that hold it in place. Two bolts on the outside of each speaker and one bolt either side of the screws that hold the T-tops in place

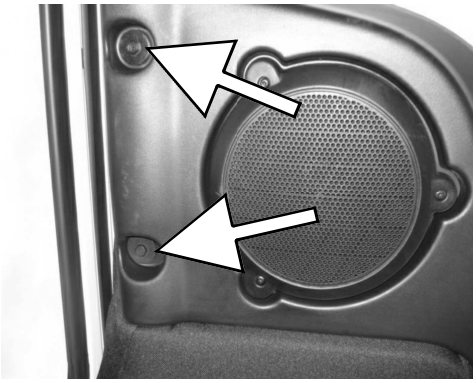

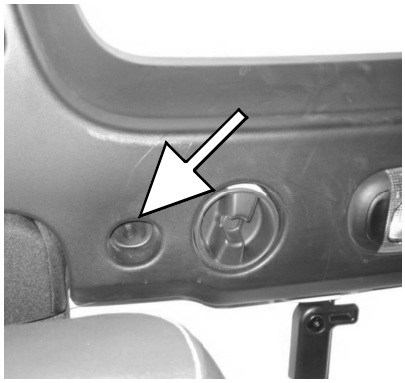

(B) **Loosen velcro, unzip and remove the padding covering both roll bars. Remove the foam/styrene padding, as indicated.**

Replace the roof, but do not fasten.

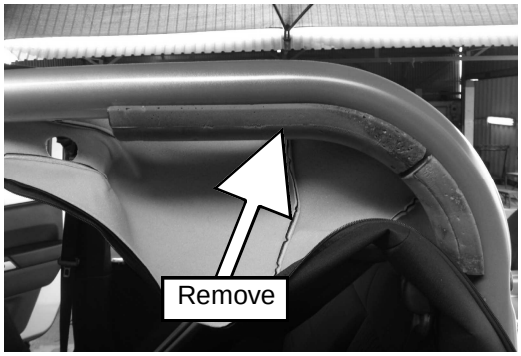

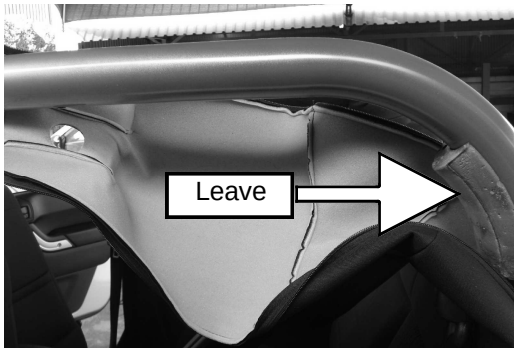

© COPYRIGHT 2014 FRONT RUNNER VEHICLE OUTFITTERS

3 PREP AND INSTALL REAR SUPPORT ARMS...CONT.

(C) Grab the two Rear Support Brackets (Items 1 & 2 from FAJK005 box). Line up the left and right brackets (Refer to block below) with the corresponding holes in the roof. With your black maker, mark the position of where the Rear Mounting Brackets need to bolt onto the roll bar.

With the help of a friend, remove the roof.

Use the two holes and ribs as indicated to identify between the left and right brackets. The two holes must be towards the rear of the vehicle and the ribs must be on the INSIDE of the roll bar.

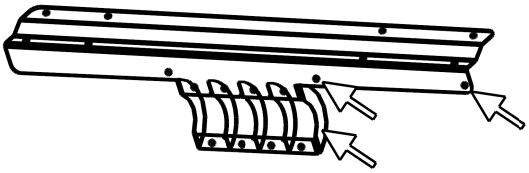

(D) Place the Rear Support Brackets back over the the roll bars lining them up with your marking from Step 3C.

Using the M6 Nyloc Nuts and Flat Washers supplied (Items 3 & 4), loosely fasten the brackets to the roll bars.

(E) Using a suitable piece of wood, steel or other object, rest it across the centre of the two Rear Support Brackets. Adjust the two brackets by rotating them inwards or outwards so that they are both sitting horizontal/straight. Use the plank or chosen object as a reference guide. Once happy, hand tighten the back four nuts (two top and two bottom).

(F) With your friend, place the roof back onto the vehicle, and re-fasten the bolts.

© COPYRIGHT 2014 FRONT RUNNER VEHICLE OUTFITTERS

4 INSTALL FRONT SUPPORT ARMS (FAJK003)

(A) Grab your T40 Torx Wrench and remove the six bolts holding the Window Corner Plate in place. Be careful not to let the plate fall when removing the last bolt as this may result in damage to the paintwork of the part or your vehicle.

Remove the paper backing form the Rubber Strips supplied and apply five pieces to the inside of each Front Support Arm as indicated below. The strips are applied to avoid damaging the vehicle's paintwork.

Fasten the Front Support Arms (Item 17) over the Window Corner Plates using the original bolts.

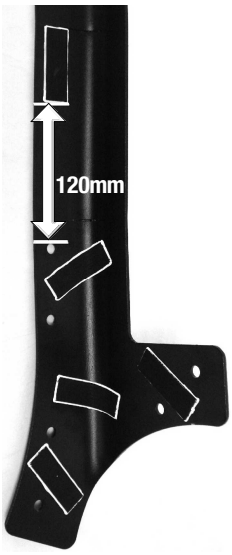

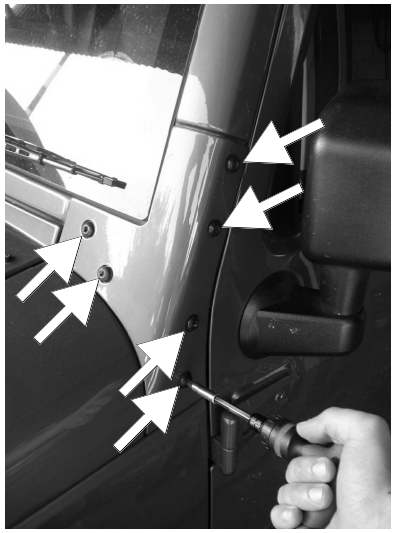

5 PREP FOR RACK INSTALL (FAJK005)

(A) Clean the area around all the 22mm holes drilled in the roof with methylated spirits/denatured alcohol.

Insert the Aluminum Spacer (Item 6) into the Foam Washer (Item 5) and remove paper the backing from the Foam Washer to expose the adhesive.

Insert the washer/spacer combination, adhesive side down, into the 22mm holes so that the spacer comes to rest on the Rear Support Brackets underneath.

Firmly press the Foam Washer all the way around securing it to the roof.

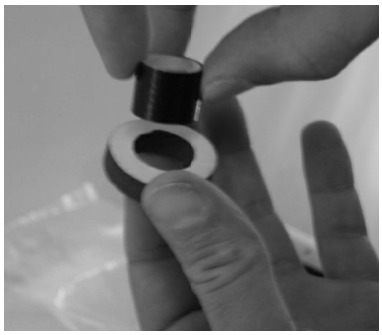

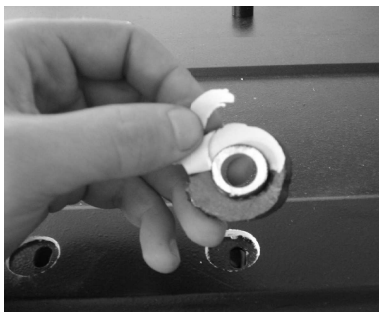

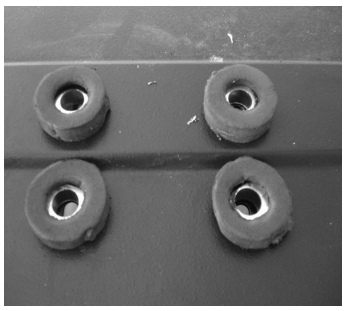

© COPYRIGHT 2014 FRONT RUNNER VEHICLE OUTFITTERS

5 PREP FOR RACK INSTALL...CONT.

(B) **If not already assembled, assemble your Tray as per the Universal Tray Assembly Instructions (Document RRSTUNI)**

NOTE: Before fitting the Wind Deflector, insert two M8 x 20 Hex Bolts (Item 14 from FAJK003 box) into the first slat (Combined Slat) using the machined slots. Slide a bolt to each of the outer corners.

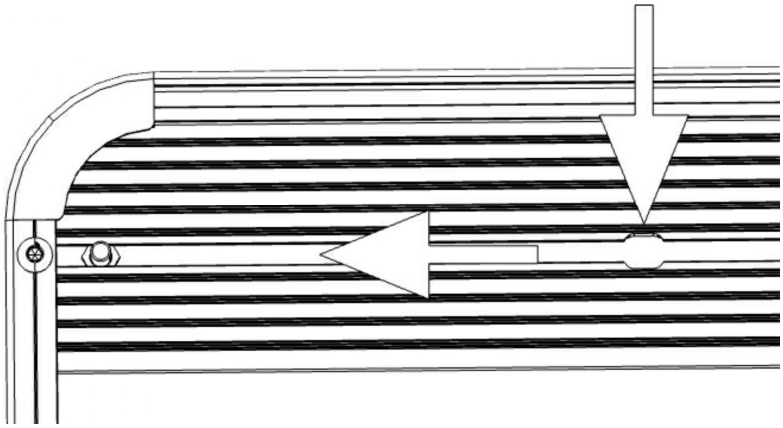

(C) **After fitting the Wind Deflectors, the Tray should still be upside down, loosely mount the Tray Support Brackets (from FAJK004 box) to the Tray using Items 10, 11 & 12. As before use the machined slots to insert the Hex Bolts into the Slats. The Tray Support Brackets should be mounted at the opposite end of the Tray to the Wind Deflector.**

The rear of the Tray Support Bracket must mount onto the very last Slat (Combined Slat) and approximately 80mm in from the outer edge of the side of the Tray. Do not tighten the bolts yet.

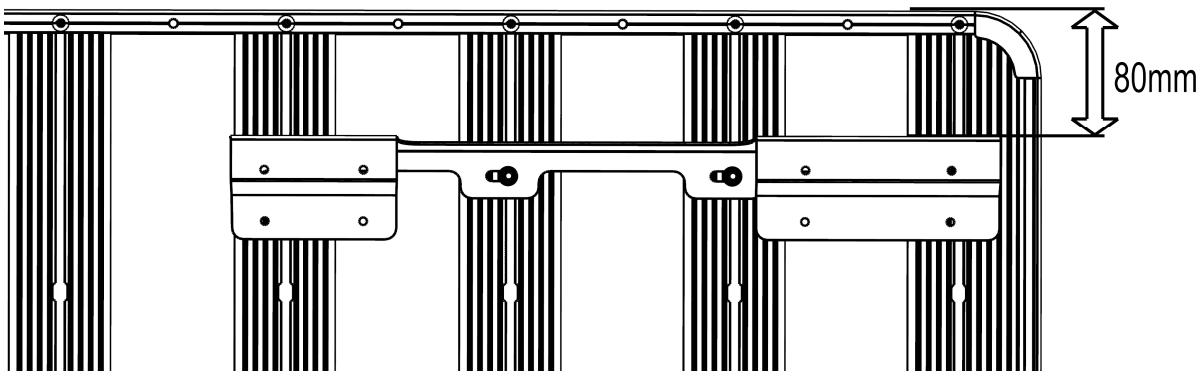

You're almost finished. Take a quick breather before mounting your Tray to your Jeep.

© COPYRIGHT 2014 FRONT RUNNER VEHICLE OUTFITTERS

6 MOUNT YOUR TRAY

(A) **With the help of a friend, flip the Tray end over end so that it is in the upright position. (The Tray is flipped end over end so that bolts and brackets do not slide left and right).**

With one of you on either side of the Tray, lift the Tray and walk it into position above the vehicle, approaching from either the front or rear of the vehicle.

Line up the Front Support Arms with the two Hex Bolts either side of the Wind Deflector and hand tighten the front of the Tray to the arms using Items 15&16 (from FAJK003 box).

The Rear Tray Support Brackets should still be loose enough to move around. Line the brackets up with the holes on the roof and fasten them into position using Items 3, 4, 7 & 8 (from FAJK005 box).

Centre the Tray from left to right. Use a tape measure to double check. Once you are happy that the Tray is in the correct position, fasten all nuts and bolts securely both inside and outside of the vehicle on all brackets that were installed.

Push the Plastic Nut Caps (Item 9 from FAJK005 box) provided over all the exposed bolts and to close up all the roll bar padding.

Take a step back and admire your work. Good job!

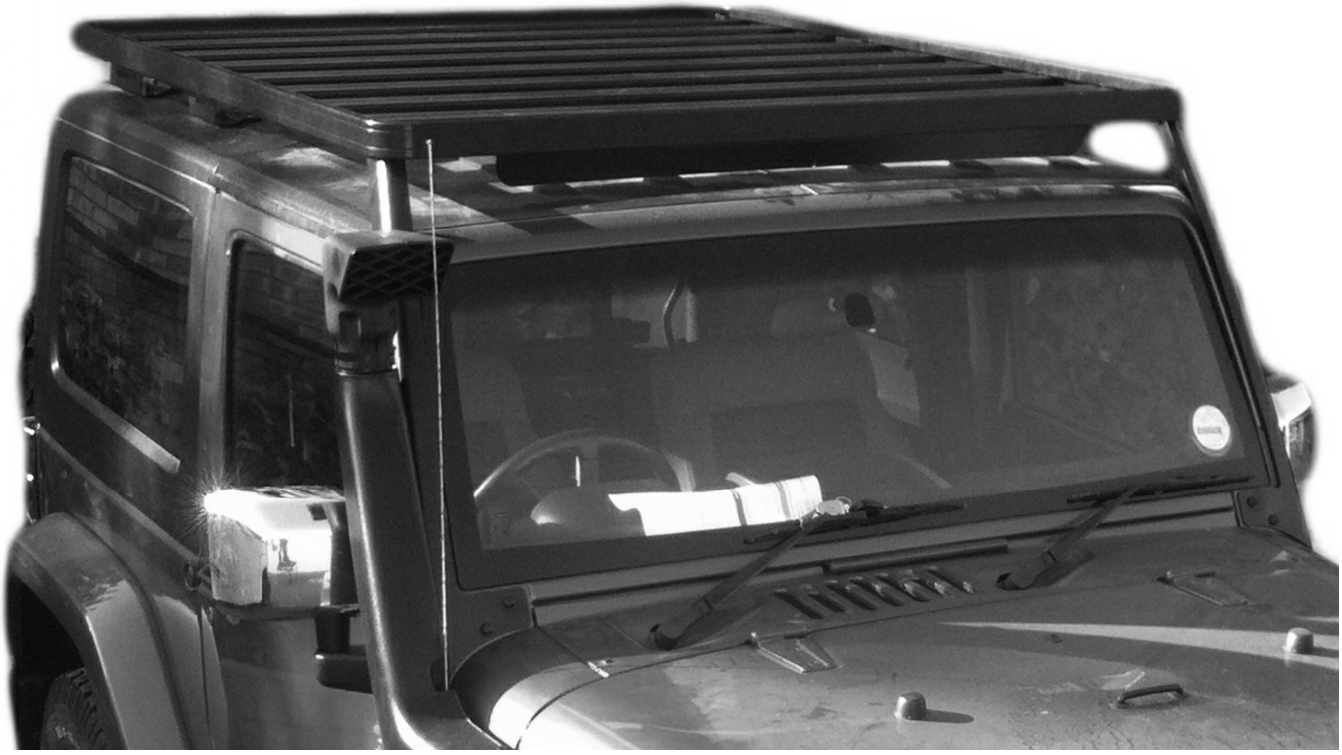

© COPYRIGHT 2014 FRONT RUNNER VEHICLE OUTFITTERS

7 REMOVING YOUR RACK

(A) Should you wish to remove your rack, you will need to plug the holes you drilled in the roof (Step 3E), using the supplied Sealing Plugs (from FAJK002 box, see image - 16 Supplied)

Remove the Tray, Front Uprights and the Tray Support Brackets, by reversing the instillation procedure. Leave the Foam Washers and the Aluminum Spacers in place. Screw in the Sealing Plugs reusing the M6 Nyloc Nuts and Washers that held the Tray Support Brackets in position.

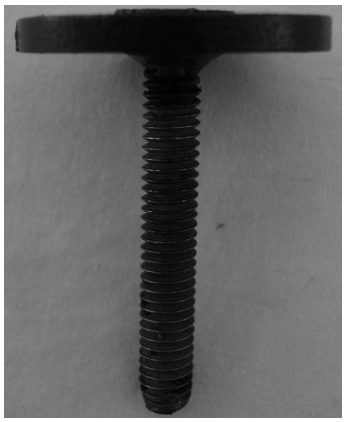

8 TAKE A TRIP

(A) After your first adventure, check that all nuts, bolts, screws and fittings are tight. Re-tighten where needed. You'll find a small amount of settling has happened.

Go on many more adventures, periodically checking all nuts, bolts, screws and fittings.

Front Runner can not recommend a maximum weight carrying capacity. Please refer to your vehicle manufacturer's recommendations.

9 INSTALL OTHER VEHICLE AND RACK ACCESSORIES

(A) Now's the time to visit your favorite Front Runner dealer in person or online.

© COPYRIGHT 2014 FRONT RUNNER VEHICLE OUTFITTERS

FRONT RUNNER

JEEP JK (3 DOOR) SLIMLINE II - HALF TRAY EXTREME RACK KIT

ENG

FAJK005 / KRJW017T

INSTALL TIME: 5 Hours

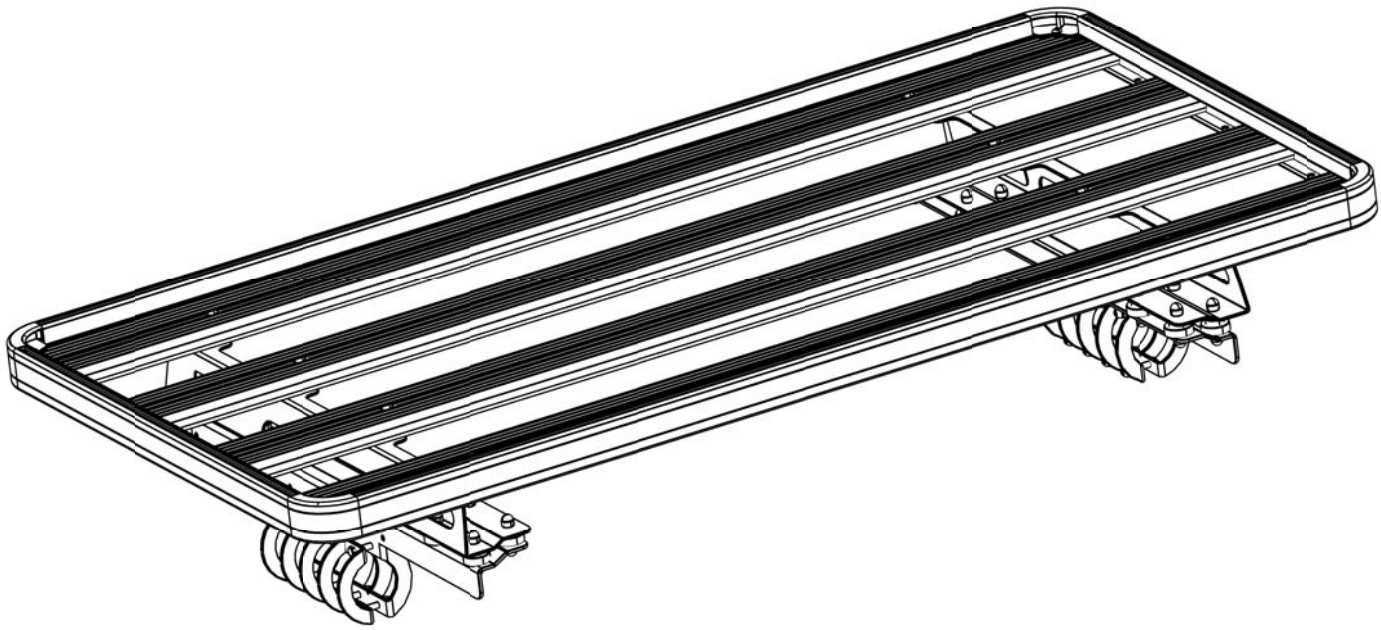

NOTE: Your Jeep JK (3 Door) Extreme Roof Rack Kit consists of three boxes. (1) the Tray, (2) the Roll Bar Brackets (FAJK005) and (3) the Tray Support Brackets (FAJK004).

IMPORTANT WARNING!

IT IS CRITICAL THAT ALL FRONT RUNNER PRODUCTS BE PROPERLY AND SECURELY ASSEMBLED AND ATTACHED TO YOUR VEHICLE. IMPROPER ATTACHMENT COULD RESULT IN AN AUTOMOBILE ACCIDENT, AND COULD CAUSE SERIOUS BODILY INJURY OR DEATH TO YOU OR TO OTHERS. YOU ARE RESPONSIBLE FOR ASSEMBLING AND SECURING ALL FRONT RUNNER PRODUCTS TO YOUR VEHICLE, CHECKING THE ATTACHMENTS PRIOR TO USE, AND PERIODICALLY INSPECTING THE PRODUCTS FOR ADJUSTMENT, WEAR, AND DAMAGE. THEREFORE, YOU MUST READ AND UNDERSTAND ALL OF THE INSTRUCTIONS AND CAUTIONS SUPPLIED WITH YOUR FRONT RUNNER PRODUCT PRIOR TO INSTALLATION OR USE. IF YOU DO NOT UNDERSTAND ALL OF THE INSTRUCTIONS AND CAUTIONS, OR IF YOU HAVE NO MECHANICAL EXPERIENCE AND ARE NOT THOROUGHLY FAMILIAR WITH THE INSTALLATION PROCEDURES, YOU SHOULD HAVE THE PRODUCT INSTALLED BY A PROFESSIONAL INSTALLER OR OTHER QUALIFIED PERSONNEL.

© COPYRIGHT 2014 FRONT RUNNER VEHICLE OUTFITTERS

1 GET ORGANIZED

Your ROLL BAR BRACKET box (FAJK005) contains:

Item #	Quantity	Description
1	2	REAR SUPPORT BRACKET PART A
2	2	REAR SUPPORT BRACKET PART B - (1 LEFT, 1 RIGHT)
3	32	M6 FLAT WASHER
4	32	M6 NYLOC NUT
5	16	FOAM WASHER
6	16	ALUMINUM SPACER
7	16	M6 FLAT WASHER
8	16	M6 x 30 HEX BOLT
9	16	M6 NUT CAP

*** 16 x Sealing Plug (Not pictured - Refer to Step 6)**

You will need:

- ☐ a 3 door Jeep Wrangler
- ☐ a Measuring Tape
- ☐ a 13mm Flat and 13mm Socket Wrench
- ☐ a T40 Torx Wrench
- ☐ a Drill Machine
- ☐ a 6mm Drill Bit
- ☐ a 22mm (7/8") Hole Saw
- ☐ a Step Ladder
- ☐ a Black and a White Marker
- ☐ a Rag and Methylated Spirits/ Denatured Alcohol
- ☐ a Dust Cover or Blanket
- ☐ Masking Tape
- ☐ a suitable piece of wood or steel for Step 3E
- ☐ a Friend
- ☐ a clean dry work area near your Jeep

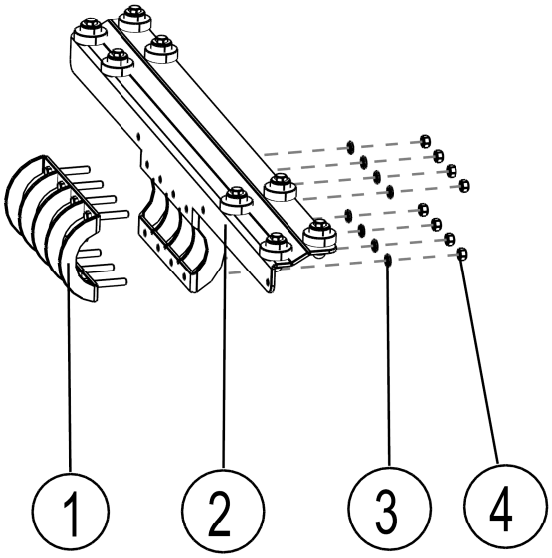

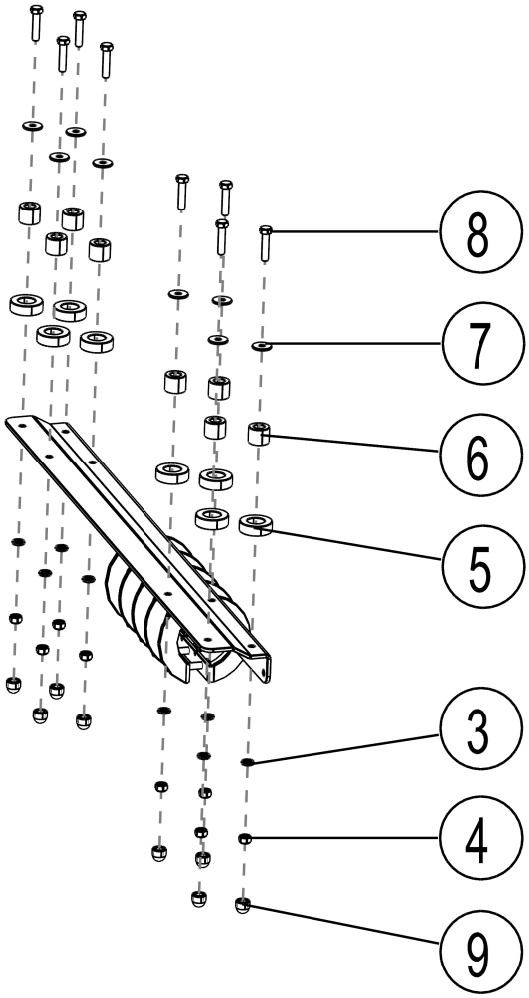

© COPYRIGHT 2014 FRONT RUNNER VEHICLE OUTFITTERS

1 GET ORGANIZED...CONT.

Your TRAY SUPPORT BRACKET box (FAJK004) contains:

Item #	Quantity	Name
10	8	M8 x 16 HEX BOLT
11	8	M8 FLAT WASHER
12	8	M8 NYLOC NUT
13	2	TRAY SUPPORT BRACKET - (1 LEFT, 1 RIGHT)

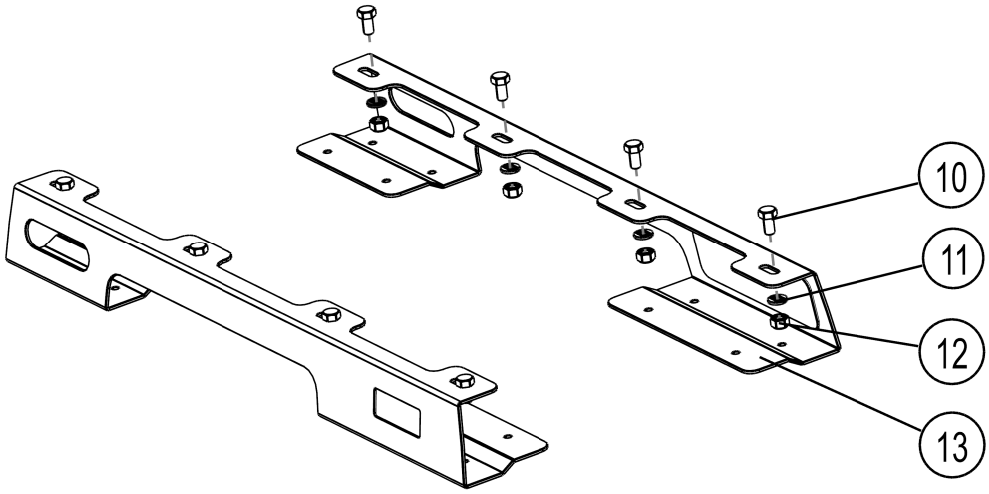

(A) **Familiarize yourself with the parts and then step away from the work area and read through these instructions from beginning to end. Grab a cup of coffee and take a moment. A little prep now may save you a lot of time later.**

2 REMOVE AND DRILL ROOF

(A) **Remove the two Front T-top Roofs.**

Disconnect the power socket and water pipe in the back left corner of the vehicle.

(B) **Using a T40 Torx Wrench, remove the six Torx Bolts holding the rear roof to the vehicle body.**

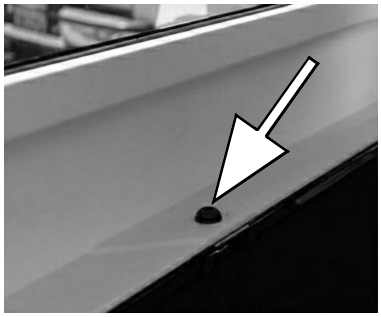

© COPYRIGHT 2014 FRONT RUNNER VEHICLE OUTFITTERS

2 REMOVE AND DRILL ROOF...CONT. (FAJK002)

(C) Using the T40 Torx Wrench, remove the two Torx Bolts, either side of the front seat headrests, holding the rear roof to the vehicle body.

Grab a friend to help you lift the roof off and place it on a blanket or suitable work surface on the ground as not to damage it.

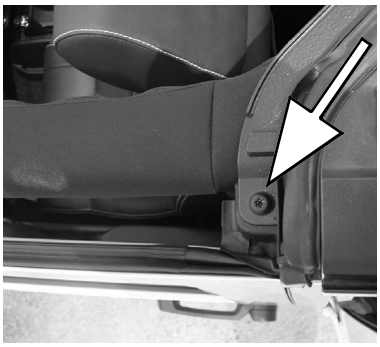

(D) Place the left and right Tray Support Brackets (Item 13) in position on the corresponding outer ribs as shown below. Mark the position of the four "feet" using a suitable marker. Remove the brackets. Using masking tape, tape the marked area on the roof where the four "feet" sat. (This is done to help protect your vehicle's roof when drilling in Step 2E.)

Place the brackets back in position, making sure to line up the shape of the brackets to the shape of the roof.

Using a measuring tape, adjust the brackets so that the centre of the two holes, as indicated by the arrows, are 130mm in from the rear edge of the roof and in the centre of the roof rib. Ensure that the other three inside holes are also in the centre of the roof rib. Take a suitable marking pen and mark the position of all the holes onto the roof.

Remove the brackets and check that the inner row of holes are running in a straight line down middle of the rib. If they do not look straight, stop and re-mark before you start drilling. Remember measure twice, drill once.

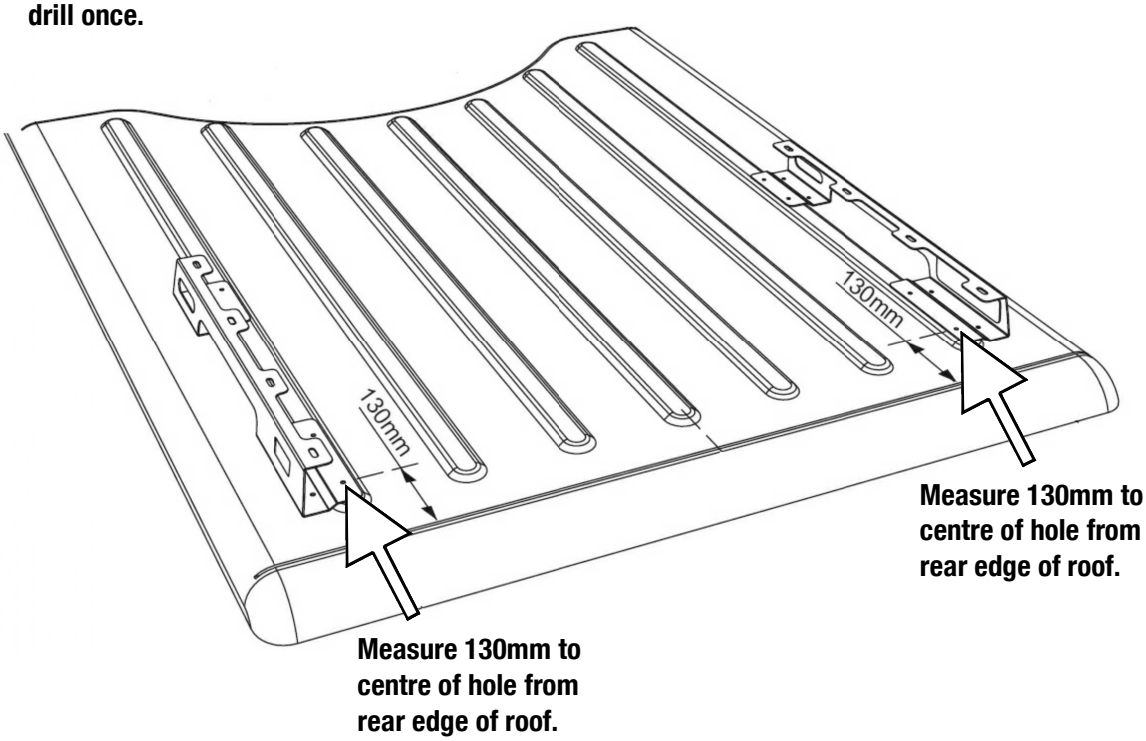

© COPYRIGHT 2014 FRONT RUNNER VEHICLE OUTFITTERS

2 REMOVE AND DRILL ROOF...CONT.

(E) Using your drill machine and a 22mm Hole Saw, drill all the marked holes to 22mm.

There is NO NEED for a lot of downward pressure. Let the drill do the work. Your job is to keep the drill steady. You don't want it slipping across your roof and scratching it!

3 PREP AND INSTALL REAR SUPPORT ARMS (FAJK005)

(A) Remove the speaker box so that you have access to the zips and padding that cover the vehicles roll bars.

This is done by removing the the six bolts that hold it in place. Two bolts on the outside of each speaker and one bolt either side of the screws that hold the T-tops in place

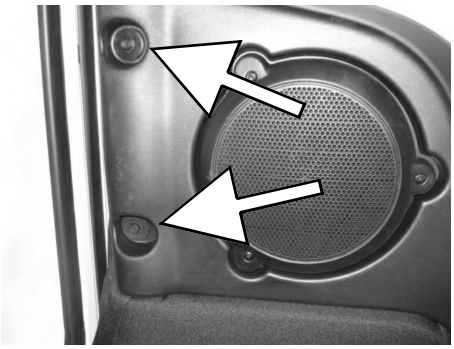

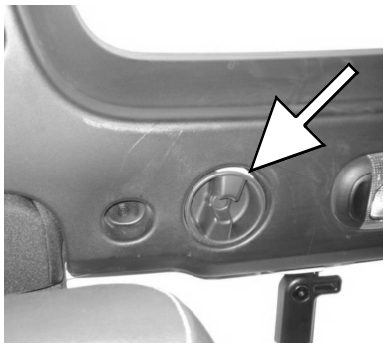

(B) Loosen velcro, unzip and remove the padding covering both roll bars. Remove the foam/styrene padding, as indicated.

Replace the roof, but do not fasten.

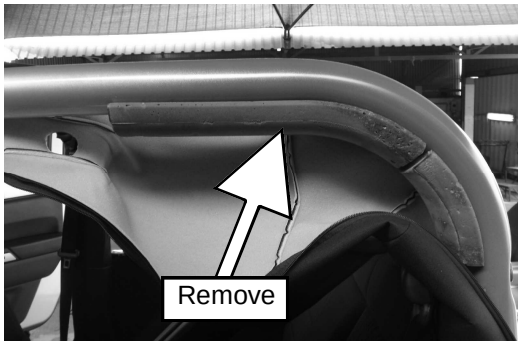

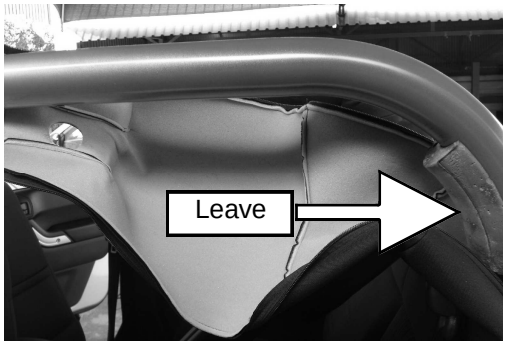

© COPYRIGHT 2014 FRONT RUNNER VEHICLE OUTFITTERS

3 PREP AND INSTALL REAR SUPPORT ARMS...CONT.

(C) Grab the two Rear Support Brackets (Items 1 & 2). Line up the left and right brackets (Refer to block below) with the corresponding holes in the roof. With your black maker, mark the position of where the Rear Mounting Brackets need to bolt onto the roll bar.

With the help of a friend, remove the roof.

Use the two holes and ribs as indicated to identify between the left and right brackets. The two holes must be towards the rear of the vehicle and the ribs must be on the INSIDE of the roll bar.

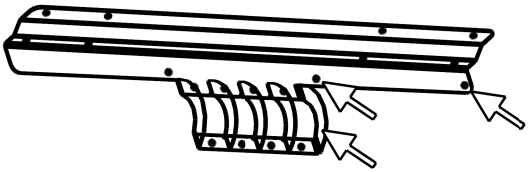

(D) Place the Rear Support Brackets back over the the roll bars lining them up with your marking from Step 3C.

Using the M6 Nyloc Nuts and Flat Washers supplied (Items 3 & 4), loosely fasten the brackets to the roll bars.

(E) Using a suitable piece of wood, steel or other object, rest it across the centre of the two Rear Support Brackets. Adjust the two brackets by rotating them inwards or outwards so that they are both sitting horizontal/straight. Use the plank or chosen object as a reference guide. Once happy, hand tighten the back four nuts (two top and two bottom).

(F) With your friend, place the roof back onto the vehicle, and re-fasten the bolts.

© COPYRIGHT 2014 FRONT RUNNER VEHICLE OUTFITTERS

4 PREP FOR RACK INSTALL (FAJK005)

(A) **Clean the area around all the 22mm holes drilled in the roof with methylated spirits/denatured alcohol.**

Insert the Aluminum Spacer (Item 6) into the Foam Washer (Item 5) and remove paper the backing from the Foam Washer to expose the adhesive.

Insert the washer/spacer combination, adhesive side down, into the 22mm holes so that the spacer comes to rest on the Rear Support Brackets underneath.

Firmly press the Foam Washer all the way around securing it to the roof.

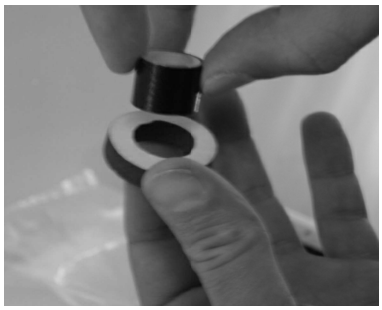

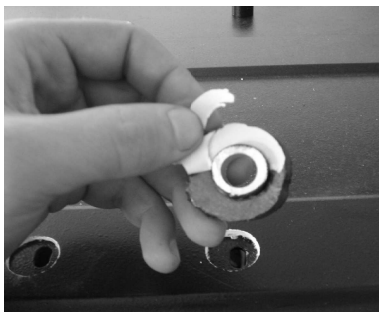

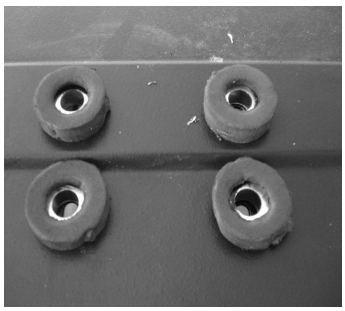

(B) **If not already assembled, assemble your Tray as per the Universal Tray Assembly Instructions (Document RRSTUNI)**

(C) **After fitting the Wind Deflectors, the Tray should still be upside down, loosely mount the Tray Support Brackets (from FAJK004 box) to the Tray using Items 10, 11 & 12. As before use the machined slots to insert the Hex Bolts into the Slats.**

The rear of the Tray Support Bracket must mount onto the very last Slat (Combined Slat) and approximately 80mm in from the outer edge of the side of the Tray. Do not tighten the bolts yet.

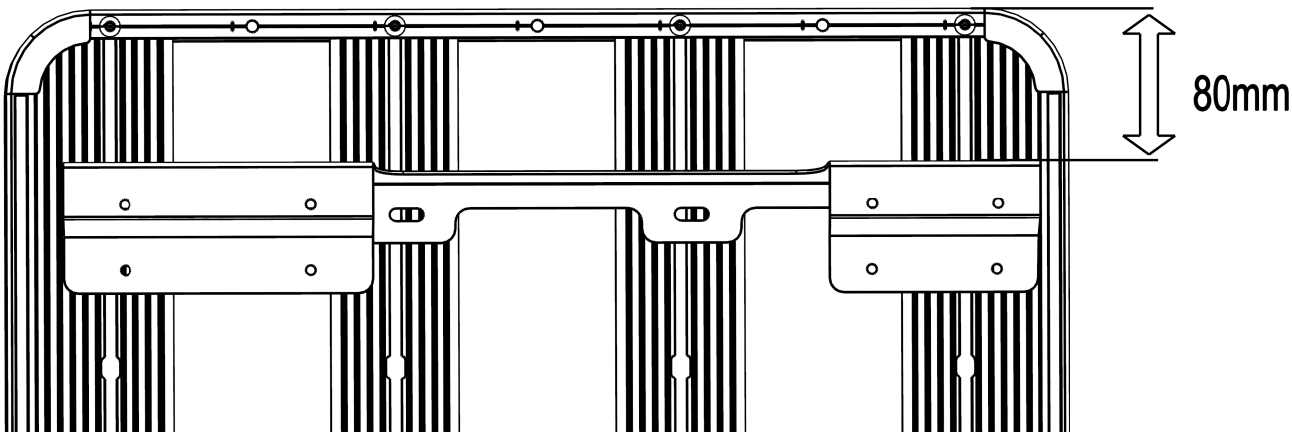

You're almost finished. Take a quick breather before mounting your Tray to your Jeep.

© COPYRIGHT 2014 FRONT RUNNER VEHICLE OUTFITTERS

5 MOUNT YOUR TRAY

(A) **With the help of a friend, flip the Tray end over end so that it is in the upright position. (The Tray is flipped end over end so that bolts and brackets do not slide left and right).**

With one of you on either side of the Tray, lift the Tray and walk it into position above the vehicle, approaching from the rear of the vehicle, making sure that the Wind Deflector faces forward.

The Tray Support Brackets should still be loose enough to move. Line the brackets up with the holes on the roof and fasten them into position using Items 3, 4, 7 &8 (from FAJK005 box).

Centre the Tray from left to right. Use a tape measure to double check. Once you are happy that the Tray is in the correct position, fasten all nuts and bolts securely, both inside and outside of the vehicle on all brackets that were installed.

Push the Plastic Nut Caps (Item 9) provided over all the exposed bolts and close up all the roll bar padding.

Take a step back and admire your work. Good job!

© COPYRIGHT 2014 FRONT RUNNER VEHICLE OUTFITTERS

6 REMOVING YOUR RACK

(A) Should you wish to remove your rack, you will need to plug the holes you drilled in the roof (Step 3E), using the supplied Sealing Plugs (from FAJK002 box, see image - 16 Supplied)

Remove the Tray and Tray Support Brackets, by reversing the instillation procedure. Leave the Foam Washers and the Aluminum Spacers in place. Screw in the Sealing Plugs reusing the M6 Nyloc Nuts and Washers that held the Tray Support Brackets in position.

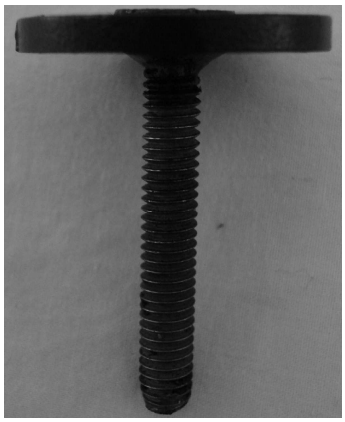

7 TAKE A TRIP

(A) After your first adventure, check that all nuts, bolts, screws and fittings are tight. Re-tighten where needed. You'll find a small amount of settling has happened.

Go on many more adventures, periodically checking all nuts, bolts, screws and fittings.

Front Runner can not recommend a maximum load carrying capacity. Please refer to your vehicle manufacturer's recommendations.

8 INSTALL OTHER VEHICLE AND RACK ACCESSORIES

(A) Now's the time to visit your favorite Front Runner dealer in person or online.

© COPYRIGHT 2014 FRONT RUNNER VEHICLE OUTFITTERS

1 ASSEMBLE & FIT SEALING PLUGS

(A) **Should you wish to remove the Rack from your vehicle, assemble the Sealing Plugs as shown in the exploded view below. Once assembled refer to the relevant section in your Rack Fitment Guide - Document KRJW****. Below is a list of Page and Section Numbers to be referred to for each Fitment Guide.**

Document: KRJW014T - Page 10, Section 8
KRJW015T - Page 9, Section 7
KRJW016T - Page 11, Section 7
KRJW017T - Page 9, Section 6

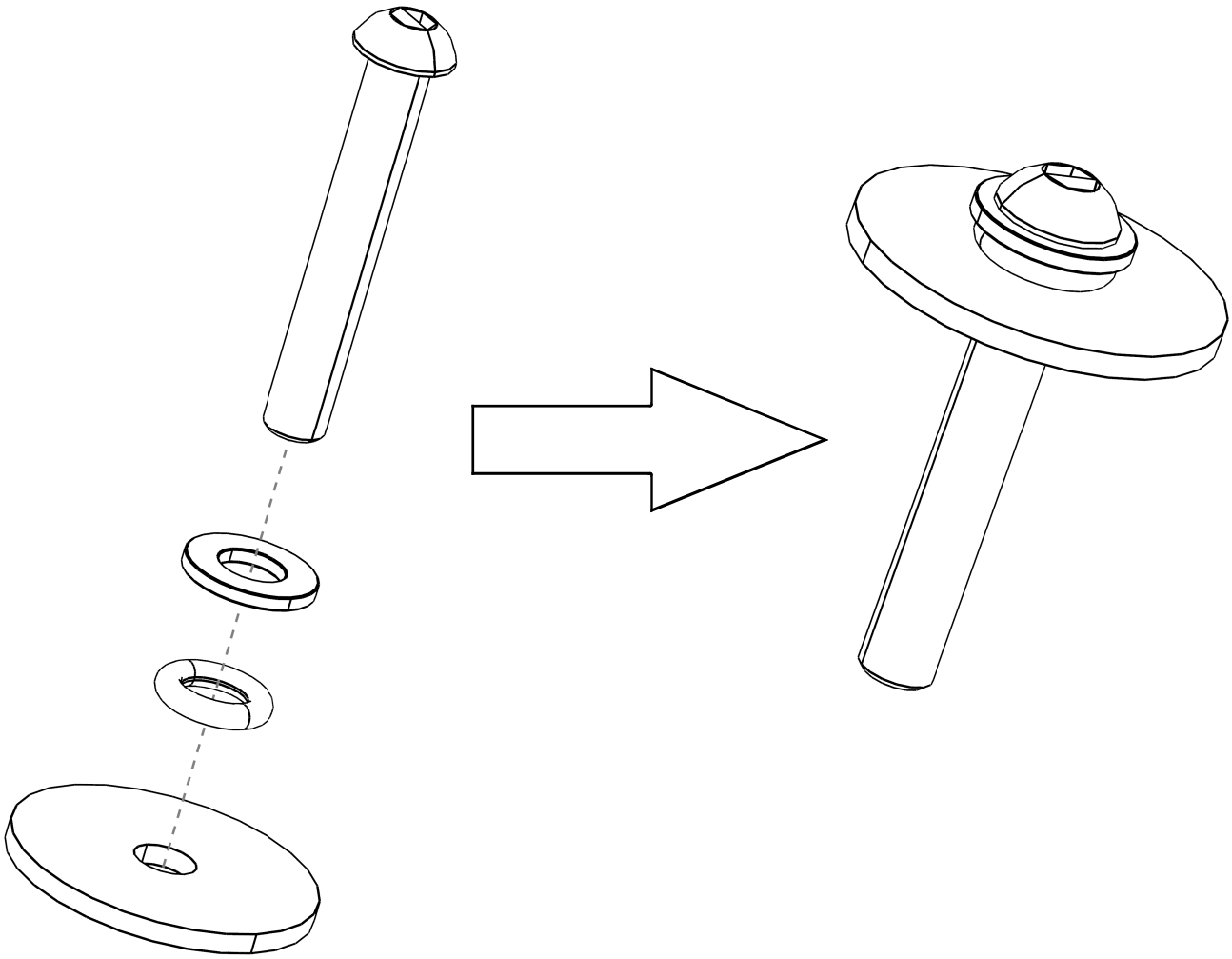

© COPYRIGHT 2014 FRONT RUNNER VEHICLE OUTFITTERS