START HERE!

READ ME FIRST

Don't be a hero and muscle through this installation without reading these fitting instructions first! Improper installation of this gear may void certain aspects of your warranty.

Before you begin, take a moment and open all your Front Runner rack kit boxes and gather the assembly instructions for the various components.

A complete kit will contain:

1. A Front Runner Mounting System specific to your vehicle
2. A Front Runner Rack Tray or Load Bar Slats

This document will guide you through the assembly of the mounting system and assist you in fitting the roof rack tray or load bars to your specific vehicle.

Please refer to the next page for a list of all the components, quantities and tools required.

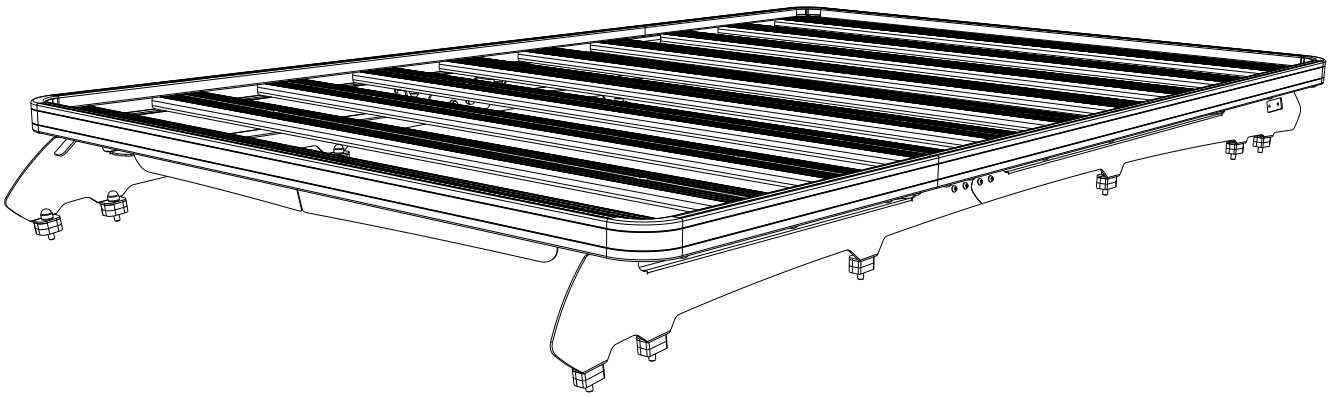

IMPORTANT WARNING! ⚠

IT IS CRITICAL THAT ALL FRONT RUNNER PRODUCTS BE PROPERLY AND SECURELY ASSEMBLED AND ATTACHED TO YOUR VEHICLE. IMPROPER ATTACHMENT COULD RESULT IN AN AUTOMOBILE ACCIDENT, AND COULD CAUSE SERIOUS BODILY INJURY OR DEATH. YOU ARE RESPONSIBLE FOR ASSEMBLING AND SECURING ALL FRONT RUNNER PRODUCTS TO YOUR VEHICLE, CHECKING THE ATTACHMENTS PRIOR TO USE, AND PERIODICALLY INSPECTING THE PRODUCTS FOR ADJUSTMENT, WEAR AND DAMAGE. THEREFORE, YOU MUST READ AND UNDERSTAND ALL OF THE INSTRUCTIONS AND PRECAUTIONS SUPPLIED WITH YOUR FRONT RUNNER PRODUCT PRIOR TO INSTALLATION OR USE. IF YOU DO NOT UNDERSTAND ALL OF THE INSTRUCTIONS AND CAUTIONS, OR IF YOU HAVE NO MECHANICAL EXPERIENCE AND ARE NOT THOROUGHLY FAMILIAR WITH THE INSTALLATION PROCEDURES, YOU SHOULD HAVE THE PRODUCT INSTALLED BY A PROFESSIONAL INSTALLER OR OTHER QUALIFIED PERSONNEL.

NOTE: Front Runner will not be responsible for any damage caused by the failure to install the product according to these instructions.

Please call us if you have any questions about the installation of this product.

 © 2019 FRONT RUNNER VEHICLE OUTFITTERS

1 GET ORGANIZED

IN THE BOX

1	2 X	Foot Rail Front 1LH + 1RH
2	2 X	Foot Rail Rear 1LH + 1RH
3	22 X	M8 Nut Cap
4	12 X	M8 x 40 Hex Bolt
5	12 X	M8 Spring Washer
6	22 X	M8 x 16 x 1.6 SS Flat Washer
7	24 X	Spacer
8	8 X	M6 x 16 Button Head
9	2 X	Joiner Plate
10	8 X	M6 Nyloc Nut
11	8 X	M6 Nut Cap
12	10 X	M8 x 20 Hex Bolt
13	10 X	M8 Nyloc Nut

TOOLS NEEDED

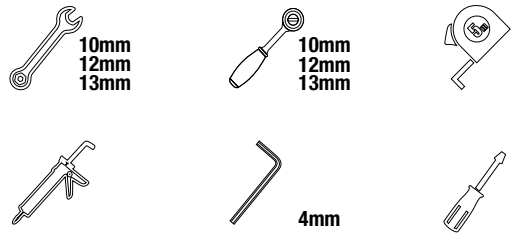

FIGURE 1.1

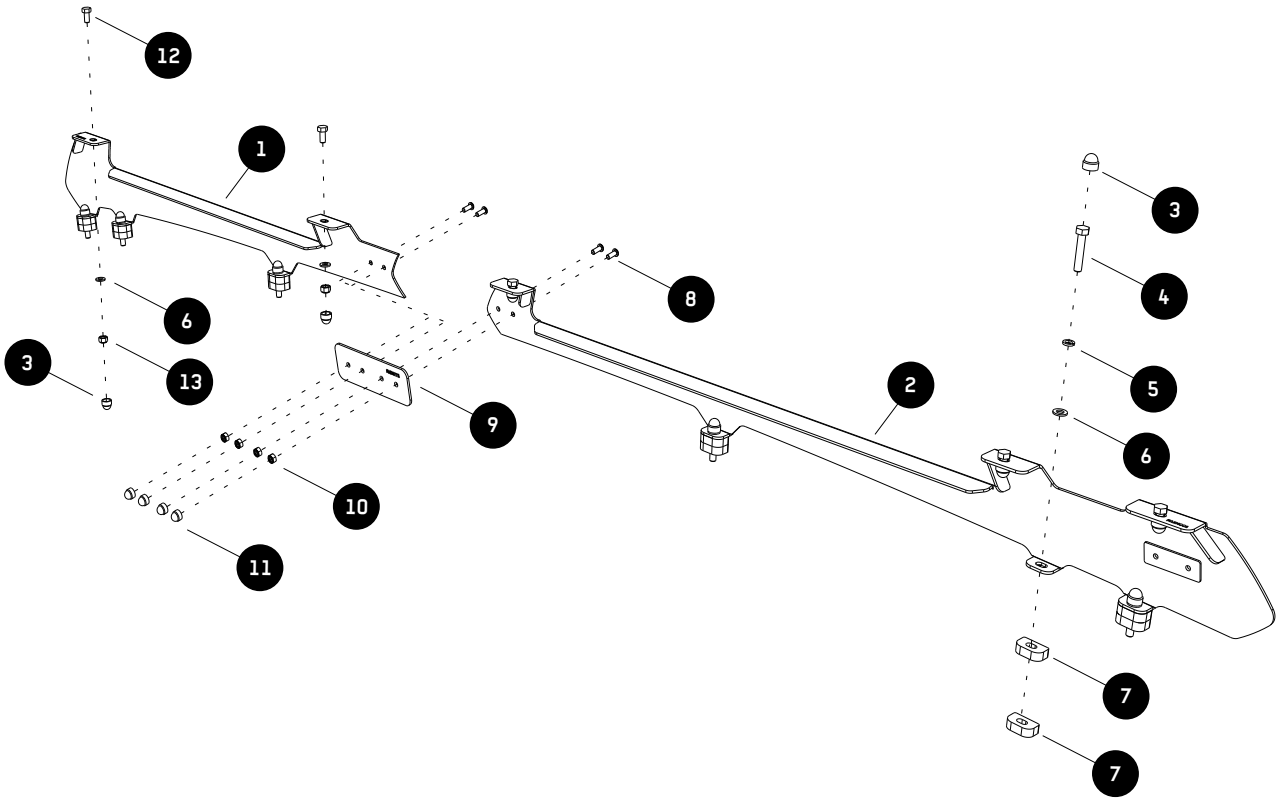

 © 2019 FRONT RUNNER VEHICLE OUTFITTERS

2 FIT AND SECURE

2.1

Before you start with the fitment of the Foot Rails (Items 1 & 2), you need to remove the factory roof rails.

Do this by unclipping and removing the front and rear end-caps of the roof rail. In the middle of the roof rail you will see a small cover plate, this will also need to be removed.

Now loosen the two bolts in front, two bolt in the middle and two bolts at the rear of the roof rail.

After you have removed all the bolts, remove both the roof rails from the vehicle.

2.2

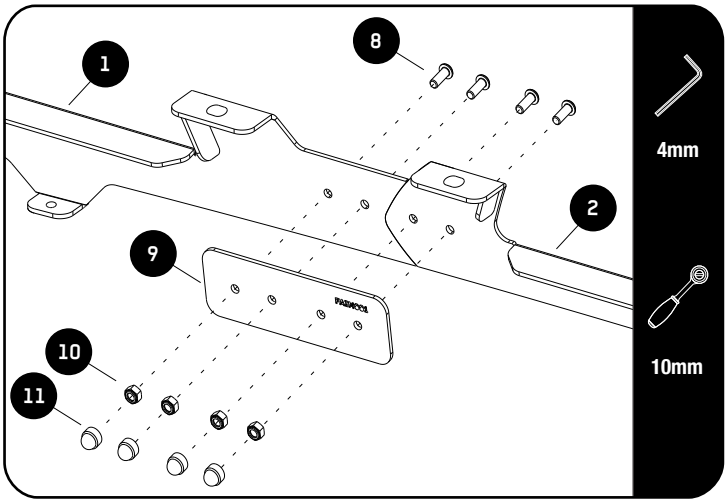

Assemble the front and rear Foot Rail (Items 1 and 2) with the Joiner Plate (Item 9) using M6 x 16 Button Head Bolts and M6 Nyloc Nuts (Items 8, 9, & 11) as shown.

Use M6 Nut Caps (Item 12) to finish off the nuts.

2.3

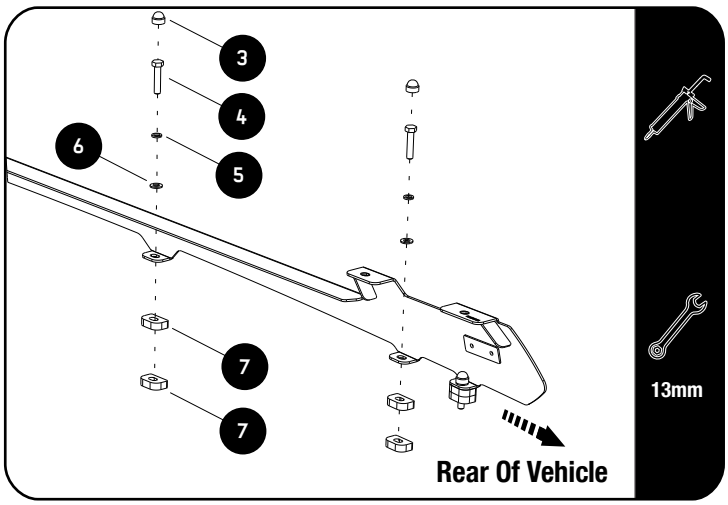

Place a bead of silicone around each of the M8 x 40 Hex Bolt threads.

Place the Spacers (Item 7) over the holes where you removed the bolts from in Step 2.1, followed by the Foot Rails that you assembled in Step 2.2.

Ensure that the Front Runner Logo is at the back of the vehicle.

Secure the Foot Rails using the M8 x 40 Hex Bolts with silicone on the threads, M8 SS Spring Washers and M8 x 16 x 1.6SS Flat Washers (Items 3, 4, 5 & 6).

Use M6 Nut Caps (Item 3) to finish off the nuts.

© 2019 FRONT RUNNER VEHICLE OUTFITTERS

3 FIT AND SECURE

3.1

Make sure that the wind deflector is installed before you proceed to the next step.

Refer to Rack Fitment Guide.

3.2

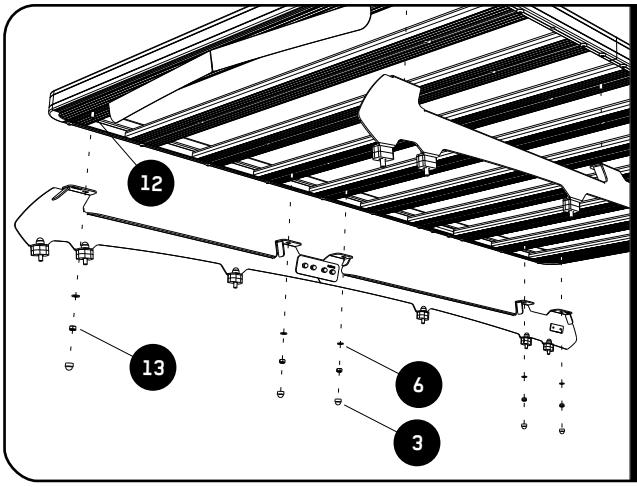

Fit your Roof Rack to the Foot Rails using M8 x 20 Hex Bolts, M8 x 16 x 1.6SS Flat Washers and M8 Nyloc Nuts (Items 6, 12 & 13).

3.3

Center the rack and tighten fully. Use M8 Nut Caps (Item 3) to finish off the nuts.

© 2019 FRONT RUNNER VEHICLE OUTFITTERS

4 COMPLETION

4.1 Congratulations! You did it. Take a step back and admire your work!

5 INSTALL OTHER VEHICLE AND RACK ACCESSORIES

Now's the time to visit your favorite Front Runner Dealer in person or online.

IMPORTANT!

FRONT RUNNER RACK KITS OFTEN HAVE A HIGHER LOAD RATING THAN THE VEHICLES THEY ARE MOUNTED TO. PLEASE REFER TO YOUR SPECIFIC VEHICLE MANUFACTURER FOR A RECOMMENDED ROOF RATING. FRONT RUNNER CANNOT BE RESPONSIBLE FOR IMPROPER LOADING BEYOND THE VEHICLE MANUFACTURER'S STATED LOAD CAPACITY.

Be sure to tag us. We love to see our gear in action! #FrontRunnerOutfitters #BornToRoam

Share your adventures on:

© 2019 FRONT RUNNER VEHICLE OUTFITTERS