START HERE!

READ ME FIRST

Don't be a hero and muscle through this installation without reading these fitting instructions first! Improper installation of this gear may void certain aspects of your warranty.

Before you begin, take a moment and open all your Front Runner rack kit boxes and gather the assembly instructions for the various components.

A complete kit will contain:

1. A Front Runner Mounting System specific to your vehicle
2. A Front Runner Rack Tray or Load Bar Slats

This document will guide you through the assembly of the mounting system and assist you in fitting the roof rack tray or load bars to your specific vehicle.

Please refer to the next page for a list of all the components, quantities and tools required.

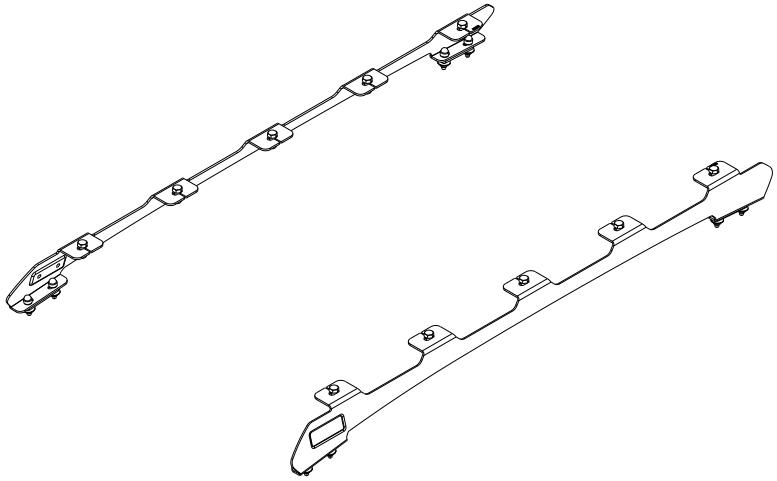

IMPORTANT WARNING! ⚠

IT IS CRITICAL THAT ALL FRONT RUNNER PRODUCTS BE PROPERLY AND SECURELY ASSEMBLED AND ATTACHED TO YOUR VEHICLE. IMPROPER ATTACHMENT COULD RESULT IN AN AUTOMOBILE ACCIDENT, AND COULD CAUSE SERIOUS BODILY INJURY OR DEATH. YOU ARE RESPONSIBLE FOR ASSEMBLING AND SECURING ALL FRONT RUNNER PRODUCTS TO YOUR VEHICLE, CHECKING THE ATTACHMENTS PRIOR TO USE, AND PERIODICALLY INSPECTING THE PRODUCTS FOR ADJUSTMENT, WEAR AND DAMAGE. THEREFORE, YOU MUST READ AND UNDERSTAND ALL OF THE INSTRUCTIONS AND PRECAUTIONS SUPPLIED WITH YOUR FRONT RUNNER PRODUCT PRIOR TO INSTALLATION OR USE. IF YOU DO NOT UNDERSTAND ALL OF THE INSTRUCTIONS AND CAUTIONS, OR IF YOU HAVE NO MECHANICAL EXPERIENCE AND ARE NOT THOROUGHLY FAMILIAR WITH THE INSTALLATION PROCEDURES, YOU SHOULD HAVE THE PRODUCT INSTALLED BY A PROFESSIONAL INSTALLER OR OTHER QUALIFIED PERSONNEL.

NOTE: Front Runner will not be responsible for any damage caused by the failure to install the product according to these instructions.

Please call us if you have any questions about the installation of this product.

 © 2024 FRONT RUNNER VEHICLE OUTFITTERS

1 GET ORGANIZED

IN THE BOX

1	1 X	Foot Rail LH
2	1 X	Foot Rail RH
3	10 X	M8 x 20 Hex Bolt
4	10 X	M8 x 16 x 1.6 Flat Washer
5	10 X	M8 Nyloc Nut
6	10 X	M8 Nut Cap
7	8 X	M6 x 12 x 1 Flat Washer
8	8 X	M6 x 25 Hex Bolt
9	8 X	M6 Nut Cap
10	4 X	6mm Spacer
11	8 X	M6 x 19 x 1 Flat Washer
12	8 X	M6 Nyloc Nut
13	1 X	Double side tape 640mm long

TOOLS NEEDED

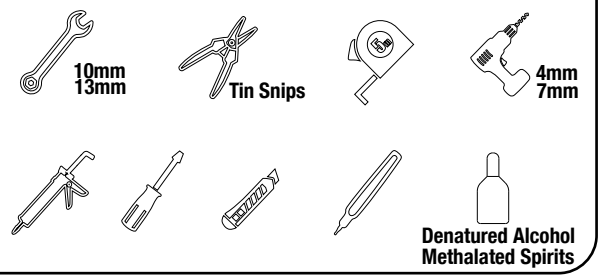

FIGURE 1.1

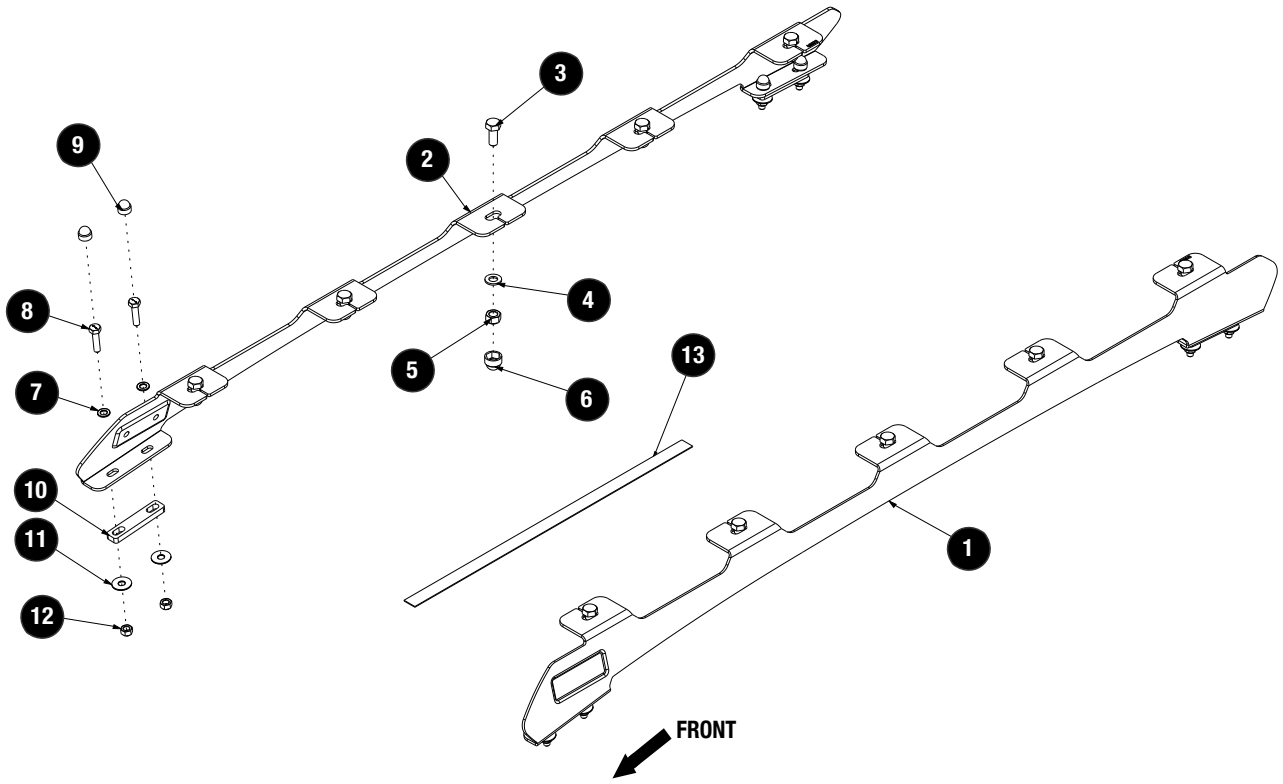

 © 2024 FRONT RUNNER VEHICLE OUTFITTERS

2 FIT AND SECURE

2.1

Check on Youtube for assistance on how to Drop the Roof Lining.

Starting at the back of the ditch mold measure 15 mm from the line in the ditch mold and make a mark.

Place the rear edge of the mounting tab of the foot rail on the mark made at 15 mm and centralize the footrail on the ditch molding.

Mark the 4 holes in the foot rail. Do this LH and RH side.

Be carefull when drilling Air bag curtain underneath.

Use a 4mm drill bit to drill the 8 pilot holes on the marks made.

Open the holes using a 7mm drill bit.

2.2

Remove the ditch mold form the roof using a panel tool or a flat screw driver.

This will be refitted in 2.5.

Clean the mastic from the roof using Denatured Alcohol or Methalated Spirits.

2.3

Align the spacers with the holes drilled in the ditch mold, mark the spacer and carefully cut the rubber of the ditch mold using a Craft knife as shown to ensure the spacers fit underneath the ditch mold.

© 2024 FRONT RUNNER VEHICLE OUTFITTERS

2 FIT AND SECURE

2.4

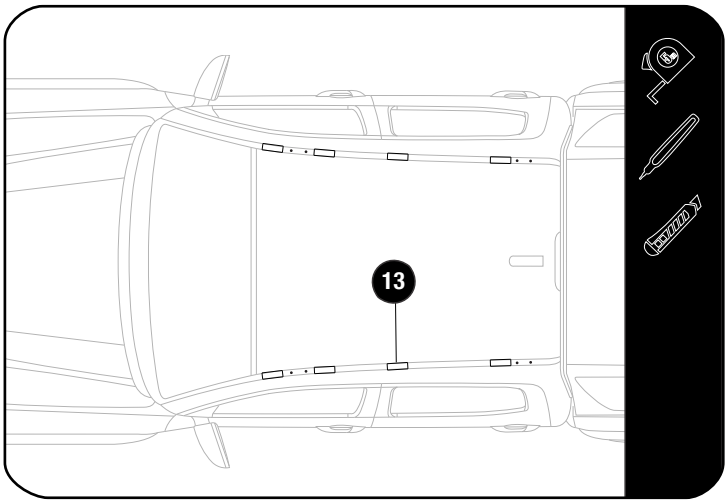

Cut the double side tape (Item 13) supplied into 80mm strips and stick onto the roof as shown.

DO NOT PEEL OFF THE TOP FILM AT THIS STAGE.

2.5

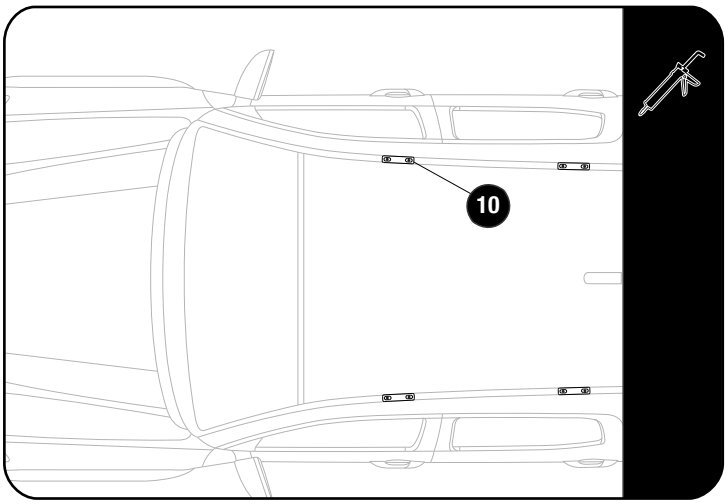

Place a bead of silicone over the holes and place the Spacers (Item 10) over the holes drilled in 2.1.

Peel off the top film of the double side tape fitted in 2.4.

Refit the ditch mold to the roof and press down on the ditch mold to ensure contact with the double side tape.

2.6

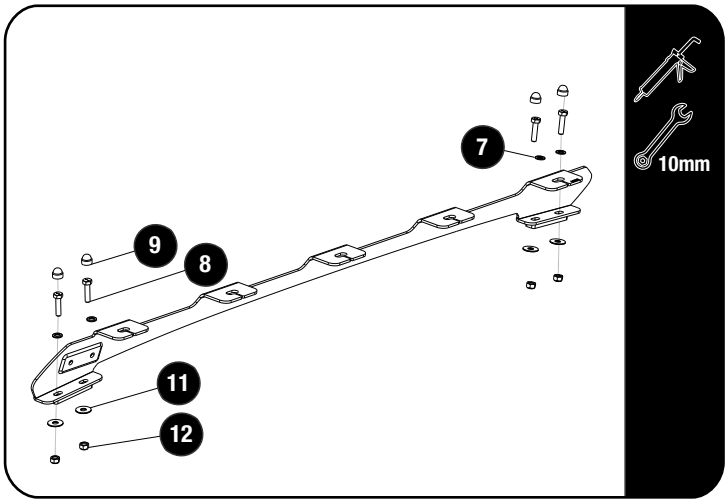

Place a bead of silicone in the Holes of the Spacers and place the Foot rail (Item 1) on to the ditch mold and line up with the holes drilled in 2.1.

Using the M6x25 Hex bolt and M6x12x1 flat washer (Item 7 & 8), Fit the bolt and washer in the Foot rail mounting tab. From the inside of the roof use the M6x19x1 Flat washer and M6 Nyloc Nut (Item 11 & 12)to fasten the foot rail.

Do this on both sides.

Fully tighten the bolts inserted and fit the M6 Nut Caps (Item 9).

Refit the Roof Lining.

Tightening Torque:

M6 : 8-10Nm / 5.9 ft lb - 7.38 ft lb

© 2024 FRONT RUNNER VEHICLE OUTFITTERS

3 FIT AND SECURE

3.1 Refer to RRSTUNI when assembling your Slimline II Tray.

3.2

Make sure that the wind deflector is installed before you proceed to the next step.

3.3

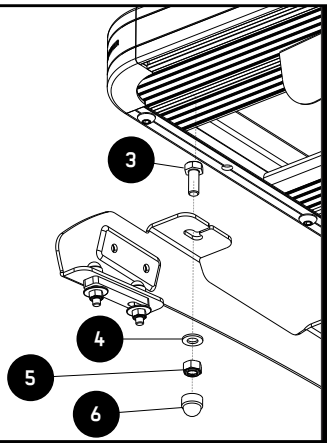

13mm

Fit your roof rack to the Foot Rails using M8 x 20 Hex Bolts, M8 x 16 x 1.6SS Flat Washers and M8 Nyloc Nuts (Items 3, 4 & 5) as shown.

Center the rack & fully tighten all fasteners. Place M8 Nut Caps (Item 6) over all Nyloc Nuts.

Tightening Torque:

M8 : 15-20Nm / 11.06 ft lb - 14.75 ft lb

4 COMPLETION

4.1 Congratulations! You did it. Take a step back and admire your work!

5 INSTALL OTHER VEHICLE AND RACK ACCESSORIES

Now's the time to visit your favorite Front Runner Dealer in person or online.

IMPORTANT!

FRONT RUNNER RACK KITS OFTEN HAVE A HIGHER LOAD RATING THAN THE VEHICLES THEY ARE MOUNTED TO. PLEASE REFER TO YOUR SPECIFIC VEHICLE MANUFACTURER FOR A RECOMMENDED ROOF RATING. FRONT RUNNER CANNOT BE RESPONSIBLE FOR IMPROPER LOADING BEYOND THE VEHICLE MANUFACTURER'S STATED LOAD CAPACITY.

Be sure to tag us. We love to see our gear in action! #FrontRunnerOutfitters #BornToRoam

Share your adventures on:

© 2024 FRONT RUNNER VEHICLE OUTFITTERS