FRONT RUNNER

GRAB ON FOOT SET

ENG

FAG0004

INSTALL TIME: 60 mins

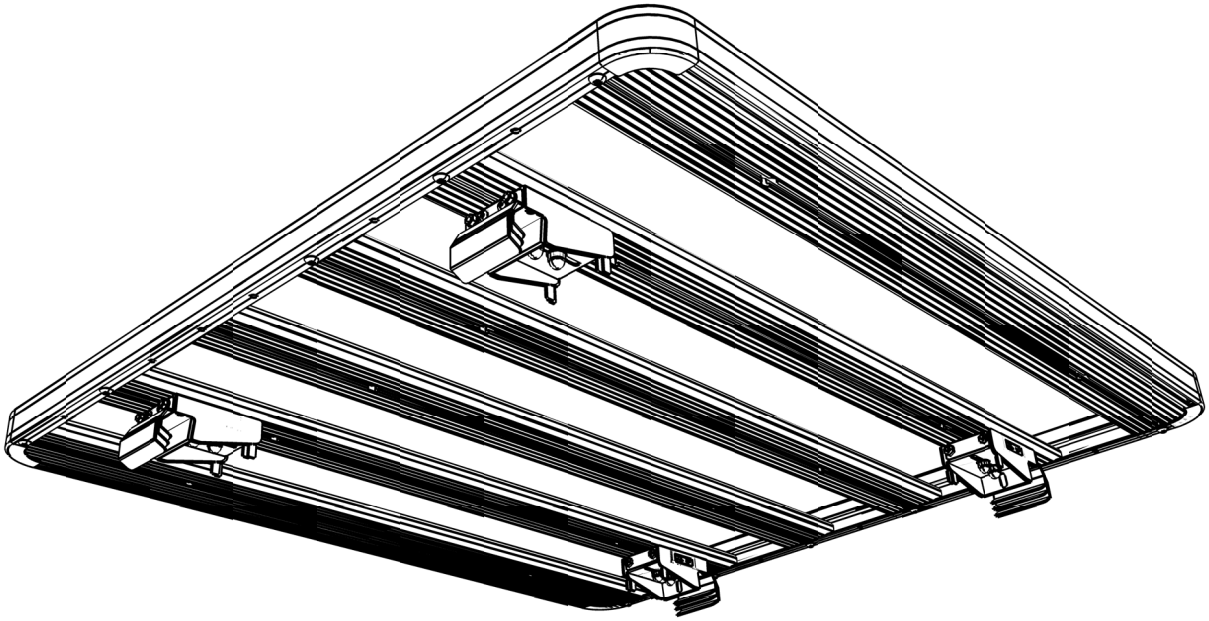

READ ME FIRST:

Thank you for purchasing a Front Runner Slimline II Rack.

This Roof Rack consists of a kit that contains:
1. A Slimline II Tray
2. A mounting system specific to your vehicle

This particular document will help you fit the Slimeline II Tray to your specific vehicle.

IMPORTANT WARNING!

IT IS CRITICAL THAT ALL FRONT RUNNER PRODUCTS BE PROPERLY AND SECURELY ASSEMBLED AND ATTACHED TO YOUR VEHICLE. IMPROPER ATTACHMENT COULD RESULT IN AN AUTOMOBILE ACCIDENT, AND COULD CAUSE SERIOUS BODILY INJURY OR DEATH TO YOU OR TO OTHERS. YOU ARE RESPONSIBLE FOR ASSEMBLING AND SECURING ALL FRONT RUNNER PRODUCTS TO YOUR VEHICLE, CHECKING THE ATTACHMENTS PRIOR TO USE, AND PERIODICALLY INSPECTING THE PRODUCTS FOR ADJUSTMENT, WEAR, AND DAMAGE. THEREFORE, YOU MUST READ AND UNDERSTAND ALL OF THE INSTRUCTIONS AND CAUTIONS SUPPLIED WITH YOUR FRONT RUNNER PRODUCT PRIOR TO INSTALLATION OR USE. IF YOU DO NOT UNDERSTAND ALL OF THE INSTRUCTIONS AND CAUTIONS, OR IF YOU HAVE NO MECHANICAL EXPERIENCE AND ARE NOT THOROUGHLY FAMILIAR WITH THE INSTALLATION PROCEDURES, YOU SHOULD HAVE THE PRODUCT INSTALLED BY A PROFESSIONAL INSTALLER OR OTHER QUALIFIED PERSONNEL.

© COPYRIGHT 2016 FRONT RUNNER VEHICLE OUTFITTERS

1 GET ORGANIZED...

Here is what you are looking at for the Grab on Foot Set. Assemblies. Below is an exploded view of the one foot.

Item #	Quantity	Description
1	4	M8X40 HEX BOLT
2	2	GRAB ON FOOT
3	2	GRAB ON FOOT
4	4	M8X19X2 SS FLAT WASHER
5	4	M8 NYLOC HEX NUT
6	4	M8 NUT CAP
7	2	SMALL FRONT CLAMP CATCH
8	2	MEDIUM FRONT CLAMP CATCH
9	2	LARGE FRONT CLAMP CATCH
10	4	M6X10 BUTTON HEAD SCREW
11	4	M6X12X1 SS FLAT WASHER
12	4	M6 SPRING WASHER
13	4	M6 CUSTOM HEX BLOT
14	2	FOAM RUBBER CLAMP CATCH PAD

You will need:

- ☐ **10 &13 mm Flat or Socket Wrench**
- ☐ **a Friend**
- ☐ **Measuring Tape**

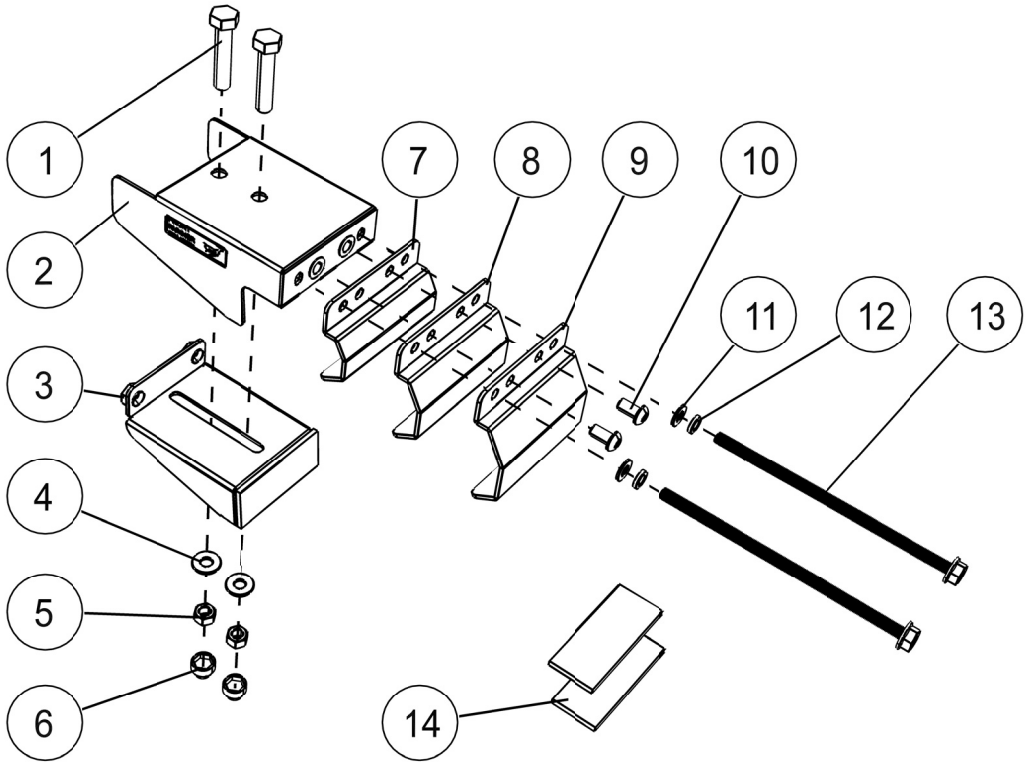

(A) **Familiarize yourself with the parts and then step away from the work area and read through these instructions from beginning to end. Take a moment as a little prep now may save you a lot of time later.**

© COPYRIGHT 2016 FRONT RUNNER VEHICLE OUTFITTERS

2 MOUNT GRAB-ON FOOT TO RACK OR LOAD BARS

(A) With your Friend lift your Front Runner Roof Rack on to your vehicles Roof Rails and ascertain where best to mount the Grab-on Feet.

(B) Now flip your Rack so that the bottom of the Rack faces up. Insert two M8x40 Hex Bolts (Item 1) into one the of the slats you have identified in Step 2A.

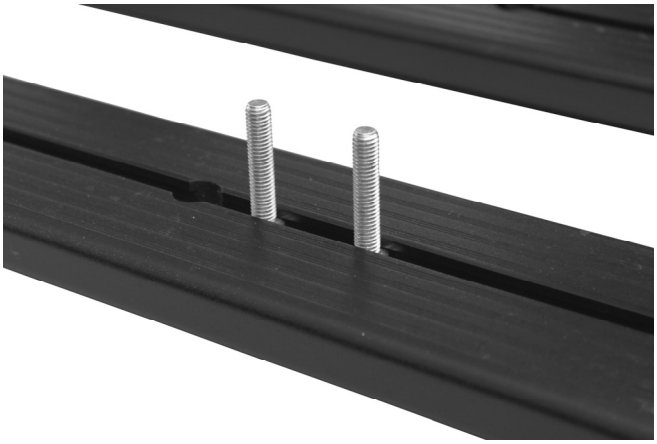

(C) Assemble the foot and then loosley fasten with two M8 Flat Washers (Item 4) two M8 Nyloc Hex Nuts (Item 5).

(D) Repeat Steps 2B and 2C for the other Feet.

© COPYRIGHT 2016 FRONT RUNNER VEHICLE OUTFITTERS

3 MOUNT RACK OR LOAD BARS WITH GRAB-ON FEET TO YOUR ROOF RAILS

(A) With your Friend flip the Rack end over end so that the feet do not slid from their position, and rest the rack on your vehicles Roof Rails.

(B) Position all the feet so that the they rest on top of the Roof Rails as shown.

(C) Depending on the size of your Roof Rails choose the Grab on Catch Clamp (Item 7 - 8) that is best suited to the job.

Remove the backing and adhere the Foam Rubber Pads (Item 14) to the chosen Catch Clamps.

Fasten the Catch Clamp to the Foot with two M6 Button Head Screws (Item 10)

Repeat this for the other feet.

(D) Insert and firmly fasten two M6 Custom Hex Bolts with two M6 Spring washers and two M6 Stainless Steel Flat Washers. (Items 13, 12 and 11)

Repeat this for the other feet.

© COPYRIGHT 2016 FRONT RUNNER VEHICLE OUTFITTERS

3 MOUNT RACK OR LOAD BARS WITH GRAB-ON FEET TO YOUR ROOF RAILS

(E) With a measuring tape centre your Roof Rack.

(F) Fully fasten all the M8 Nyloc Hex Nuts and cover each of them with M8 Nut Caps (Item 6).

(G) Congratulations, you have completed your installation. Take a step back and admire your work. Good Job!

INSTALL OTHER VEHICLE AND RACK ACCESSORIES

(A) Now's the time to visit your favourite Front Runner dealer in person or online.

© COPYRIGHT 2016 FRONT RUNNER VEHICLE OUTFITTERS