START HERE!

READ ME FIRST

Don't be a hero and muscle through this installation without reading these fitting instructions first! Improper installation of this gear may void certain aspects of your warranty.

Before you begin, take a moment and open all your Front Runner rack kit boxes and gather the assembly instructions for the various components.

A complete kit will contain:

1. A Front Runner Mounting System specific to your vehicle
2. A Front Runner Rack Tray or Load Bar Slats

This document will guide you through the assembly of the mounting system and assist you in fitting the roof rack tray or load bars to your specific vehicle.

Please refer to the next page for a list of all the components, quantities and tools required.

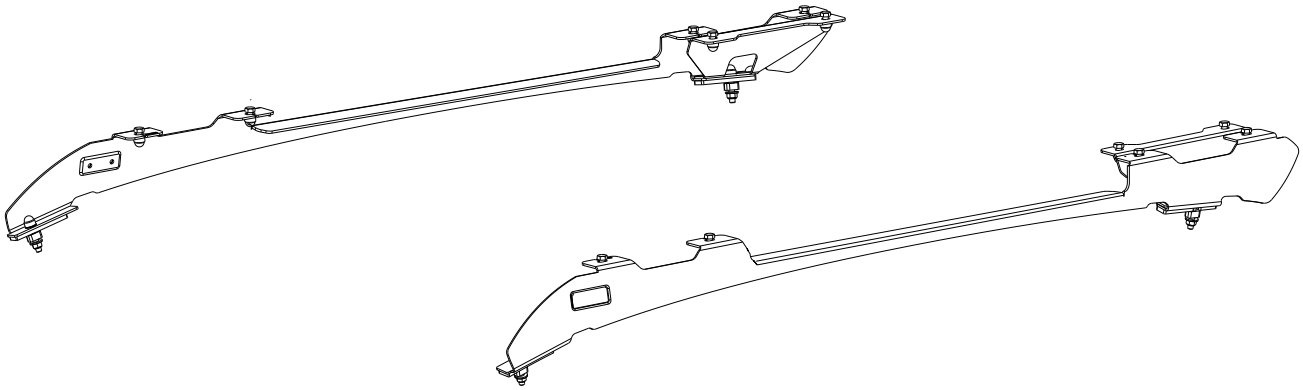

IMPORTANT WARNING! ⚠

IT IS CRITICAL THAT ALL FRONT RUNNER PRODUCTS BE PROPERLY AND SECURELY ASSEMBLED AND ATTACHED TO YOUR VEHICLE. IMPROPER ATTACHMENT COULD RESULT IN AN AUTOMOBILE ACCIDENT, AND COULD CAUSE SERIOUS BODILY INJURY OR DEATH. YOU ARE RESPONSIBLE FOR ASSEMBLING AND SECURING ALL FRONT RUNNER PRODUCTS TO YOUR VEHICLE, CHECKING THE ATTACHMENTS PRIOR TO USE, AND PERIODICALLY INSPECTING THE PRODUCTS FOR ADJUSTMENT, WEAR AND DAMAGE. THEREFORE, YOU MUST READ AND UNDERSTAND ALL OF THE INSTRUCTIONS AND PRECAUTIONS SUPPLIED WITH YOUR FRONT RUNNER PRODUCT PRIOR TO INSTALLATION OR USE. IF YOU DO NOT UNDERSTAND ALL OF THE INSTRUCTIONS AND CAUTIONS, OR IF YOU HAVE NO MECHANICAL EXPERIENCE AND ARE NOT THOROUGHLY FAMILIAR WITH THE INSTALLATION PROCEDURES, YOU SHOULD HAVE THE PRODUCT INSTALLED BY A PROFESSIONAL INSTALLER OR OTHER QUALIFIED PERSONNEL.

NOTE: Front Runner will not be responsible for any damage caused by the failure to install the product according to these instructions.

Please call us if you have any questions about the installation of this product.

 © 2023 FRONT RUNNER VEHICLE OUTFITTERS

1 GET ORGANIZED

IN THE BOX

1	2 X	Foot Rail 1LH + 1RH
2	4 X	M8 x 40 Flange Bolt
3	22 X	M8 Nut Cap
4	18 X	M8 x 20 Hex Bolt
5	18 X	M8 x 16 x 1.6 Flat Washer
6	22 X	M8 Nyloc Nut
7	2 X	Front Spacer
8	2 X	Rear Spacer
9	4 X	Bottom Spacer
10	4 X	M8 x 19 x 2SS Flat Washer
11	2 X	Support Bracket

TOOLS NEEDED

Marker

13mm

Sealant

Utility Knife

Torque Wrench

FIGURE 1.1

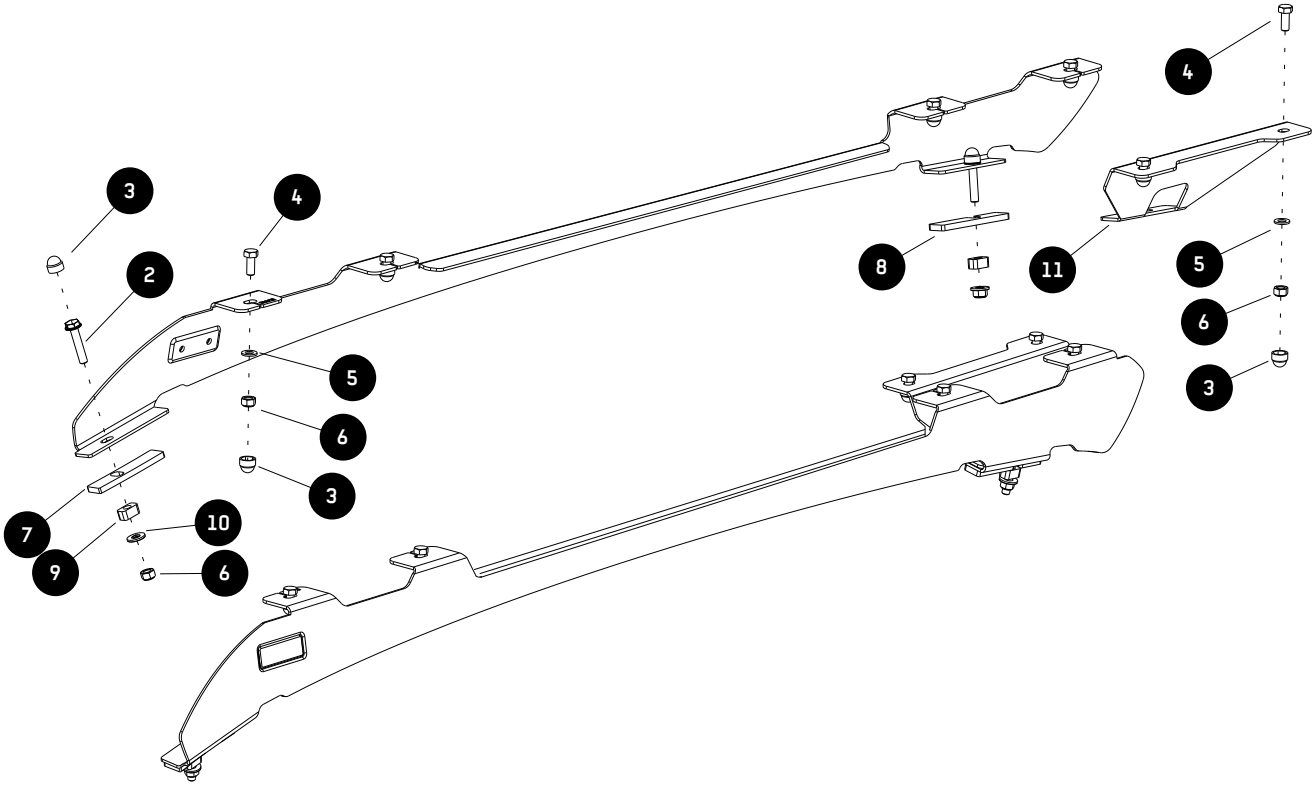

 © 2023 FRONT RUNNER VEHICLE OUTFITTERS

2 FIT AND SECURE - MODELS WITHOUT FACTORY ROOF RAILS

2.1

Drop the vehicle's roof lining.

Look online for videos to assist.

2.2

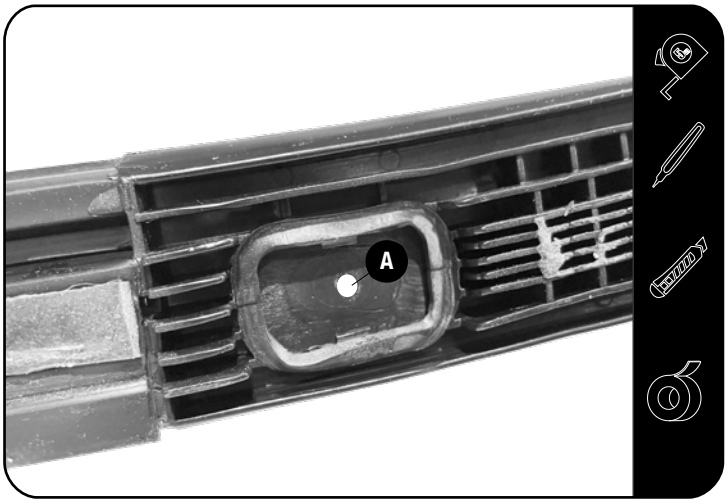

Remove the Ditch Mold from the vehicles roof. Remove the Stud insert from the plastic trim and place the Bottom Spacer (Item 9) into the opening and mark the center of the hole (A).

Drill a 6mm Pilot hole and open it to a 8.5mm Hole.

Refit the Ditch Trim with the Bottom Spacer (Item 9) in place.

2.3

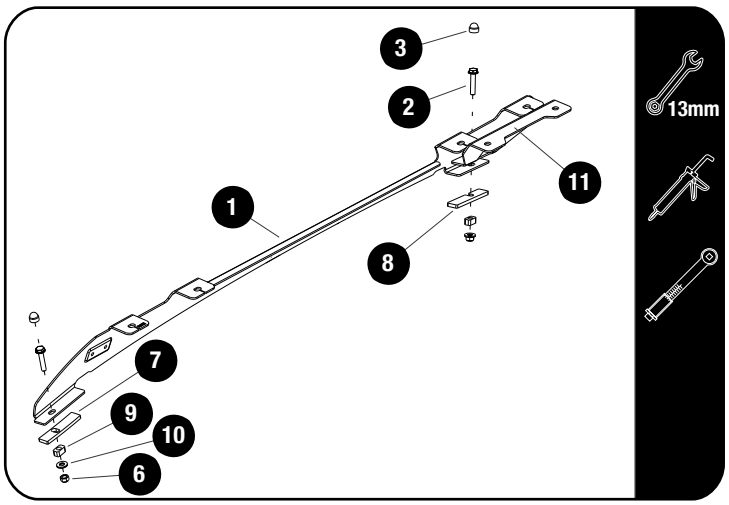

Apply a bead of sealant on the threads of the M8 x 40 Hex Bolts and secure the Foot Rail (Item 1) together with the Support Bracket (Item 11) and the Front and Rear Spacers to the Roof using M8 x 40 Hex Head Bolts, M8 x 19 x 2 Flat Washers and M8 Nyloc Nuts (Items 2, 6 & 10).

Place M8 Nut Caps (Item 6) over all M8 Hex bolt heads.

<u>Tightening Torque</u>:

M8 : 15-20Nm / 11.06 ft lb - 14.75 ft lb

© 2023 FRONT RUNNER VEHICLE OUTFITTERS

3 FIT AND SECURE - MODELS WITH FACTORY ROOF RAILS

3.1

Drop the vehicle's roof lining.

Look online for videos to assist.

3.2

Remove the OEM Rails with Ditch Trim from the vehicles roof by unbolting the nut on the inside of the roof.

Remove the EOM rails from the Ditch Trim.

3.3

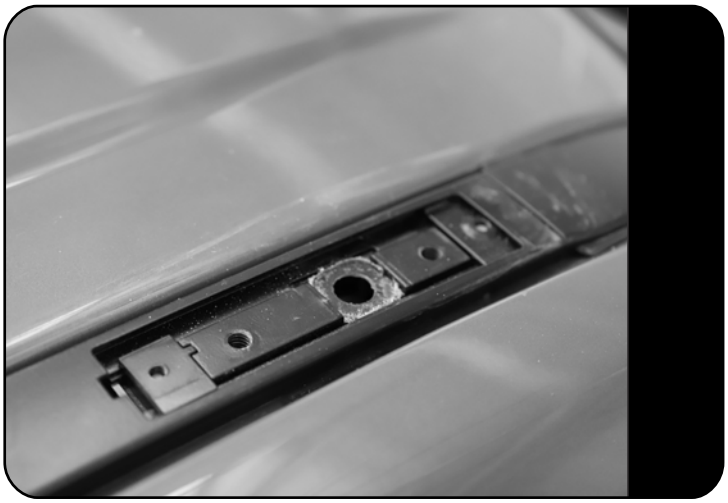

Place the Ditch Trim back into the vehicles ditch.

In 3.4 you will use the supplied hardware to secure the Foot Rial onto the Ditch Trim.

© 2023 FRONT RUNNER VEHICLE OUTFITTERS

3 FIT AND SECURE - MODELS WITH FACTORY ROOF RAILS

3.4

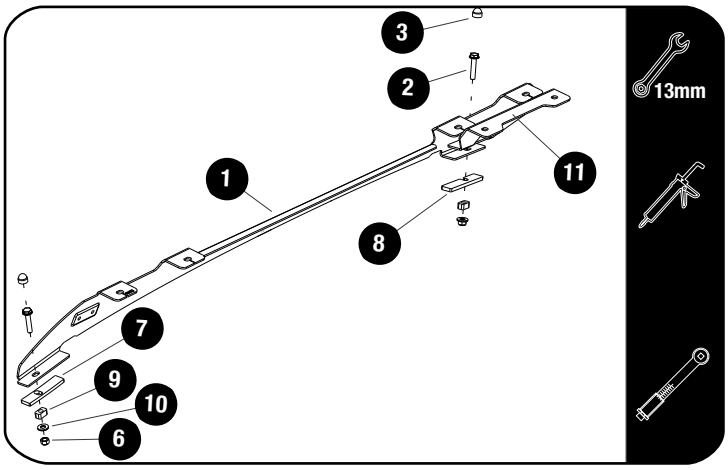

Place the Spacers (Item 7 & 8) over the mounting holes in the Ditch Trim.

Apply a bead of sealant on the threads of the M8 x 40 Hex Bolts and secure the Foot Rail (Item 1) together with the Support Bracket (Item 11) to the Roof using M8 x 40 Hex Head Bolts, M8 x 19 x 2 Flat Washers and M8 Nyloc Nuts (Items 2, 10 & 6).

Place M8 Nut Caps (Item 3) over all M8 Bolt heads

Tightening Torque:

M8 : 15-20Nm / 11.06 ft lb - 14.75 ft lb

4 FIT AND SECURE

4.1

Refer to RRSTUNI when assembling your Slimline II Tray.

4.2

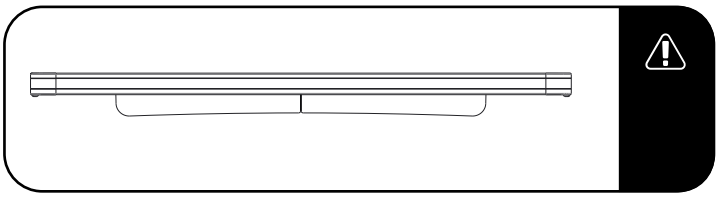

Make sure that the wind deflector is installed before you proceed to the next step.

4.3

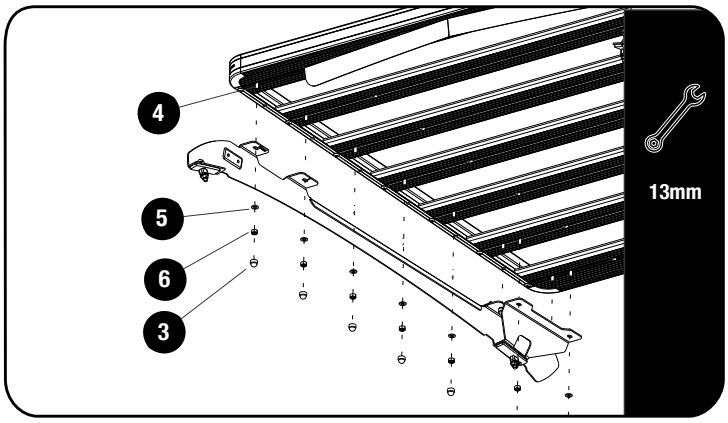

Fit your roof rack to the Foot Rails using M8 x 20 Hex Bolts, M8 x 16 x 1.6 Flat Washers and M8 Nyloc Nuts (Items 4, 5 & 6) as shown.

Tightening Torque:

M8 : 15-20Nm / 11.06 ft lb - 14.75 ft lb

Refit the Roof Lining.

4.4

Center the rack and tighten fully. Use M8 Nut Caps (Items 3) to finish off the nuts.

© 2023 FRONT RUNNER VEHICLE OUTFITTERS

5 INSTALL OTHER VEHICLE AND RACK ACCESSORIES

Now's the time to visit your favorite Front Runner dealer in person or online.

IMPORTANT! ⚠

FRONT RUNNER RACK KITS OFTEN HAVE A HIGHER LOAD RATING THAN THE VEHICLES THEY ARE MOUNTED TO. PLEASE REFER TO YOUR SPECIFIC VEHICLE MANUFACTURER FOR A RECOMMENDED ROOF RATING. FRONT RUNNER CANNOT BE RESPONSIBLE FOR IMPROPER LOADING BEYOND THE VEHICLE MANUFACTURER'S STATED LOAD CAPACITY.

Be sure to tag us. We love to see our gear in action! #FrontRunnerOutfitters #BornToRoam

Share your adventures on:

© 2023 FRONT RUNNER VEHICLE OUTFITTERS