START HERE!

READ ME FIRST

Don't be a hero and muscle through this installation without reading these fitting instructions first! Improper installation of this gear may void certain aspects of your warranty.

Before you begin, take a moment and open all your Front Runner rack kit boxes and gather the assembly instructions for the various components.

A complete kit will contain:

1. A Frontrunner Mounting System specific to your vehicle
2. A Frontrunner Rack Tray or Load Bar Slats

This document will guide you through the assembly of the mounting system and assist you in fitting the roof rack tray or load bars to your specific vehicle.

Please refer to the next page for a list of all the components, quantities and tools required.

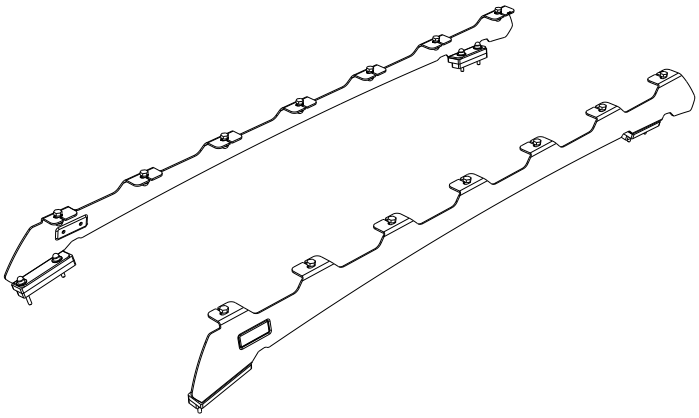

IMPORTANT WARNING! ⚠

IT IS CRITICAL THAT ALL FRONT RUNNER PRODUCTS BE PROPERLY AND SECURELY ASSEMBLED AND ATTACHED TO YOUR VEHICLE. IMPROPER ATTACHMENT COULD RESULT IN AN AUTOMOBILE ACCIDENT, AND COULD CAUSE SERIOUS BODILY INJURY OR DEATH. YOU ARE RESPONSIBLE FOR ASSEMBLING AND SECURING ALL FRONT RUNNER PRODUCTS TO YOUR VEHICLE, CHECKING THE ATTACHMENTS PRIOR TO USE, AND PERIODICALLY INSPECTING THE PRODUCTS FOR ADJUSTMENT, WEAR AND DAMAGE. THEREFORE, YOU MUST READ AND UNDERSTAND ALL OF THE INSTRUCTIONS AND PRECAUTIONS SUPPLIED WITH YOUR FRONT RUNNER PRODUCT PRIOR TO INSTALLATION OR USE. IF YOU DO NOT UNDERSTAND ALL OF THE INSTRUCTIONS AND CAUTIONS, OR IF YOU HAVE NO MECHANICAL EXPERIENCE AND ARE NOT THOROUGHLY FAMILIAR WITH THE INSTALLATION PROCEDURES, YOU SHOULD HAVE THE PRODUCT INSTALLED BY A PROFESSIONAL INSTALLER OR OTHER QUALIFIED PERSONNEL.

NOTE: Front Runner will not be responsible for any damage caused by the failure to install the product according to these instructions.
Please call us if you have any questions about the installation of this product.

 © 2021 FRONT RUNNER VEHICLE OUTFITTERS

1 GET ORGANIZED

IN THE BOX

1	2 X	Foot Rail 1LH & 1RH
2	2 X	Front Spacer Bottom
3	2 X	Front Spacer Top
4	2 X	Rear Spacer Top
5	2 X	Rear Spacer Bottom
6	2 X	Front Nut Plate
7	2 X	Rear Nut Plate
8	8 X	M6 x 19 x 1 Flat Washer
9	8 X	M6 Spring Washer
10	8 X	M6x40 Hex Bolt
11	8 X	M6 Nut Cap
12	14 X	M8 x 20 Hex Bolt
13	14 X	M8 x 16 x 1 Flat Washer
14	14 X	M8 Nyloc Nut
15	14 X	M8 Nut Cap

TOOLS NEEDED

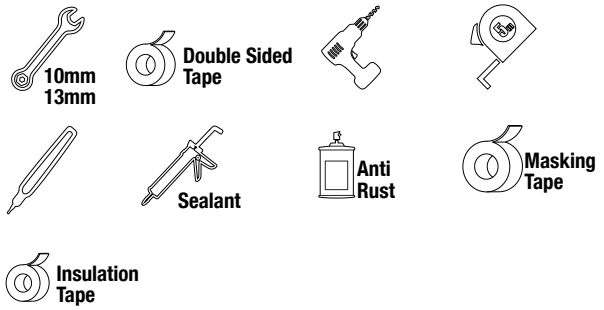

FIGURE 1.1

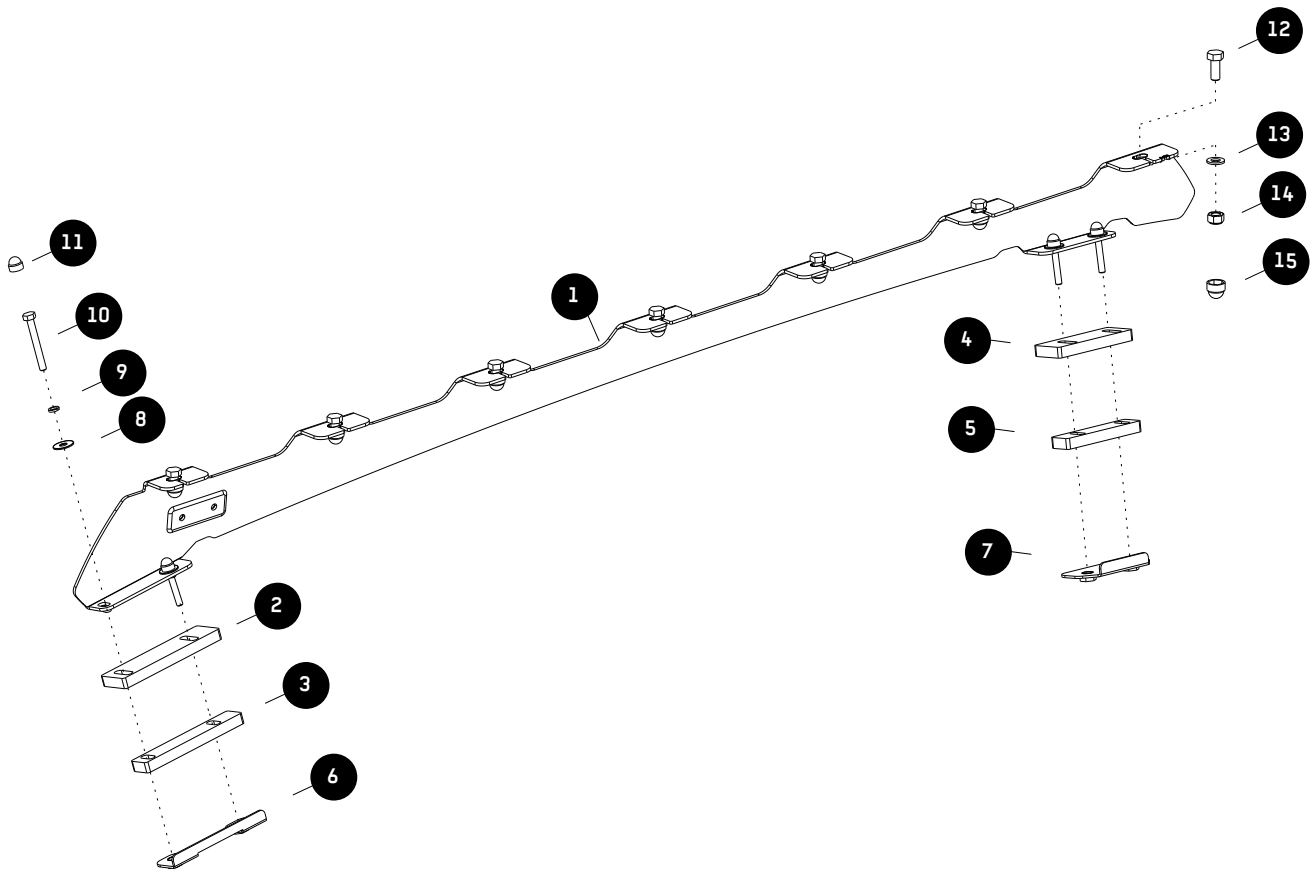

 © 2021 FRONT RUNNER VEHICLE OUTFITTERS

2 FIT AND SECURE

2.1

Remove the following parts & trim from the interior of the cab.

Grab handles

2.2

Sunvisor support brackets.

2.3

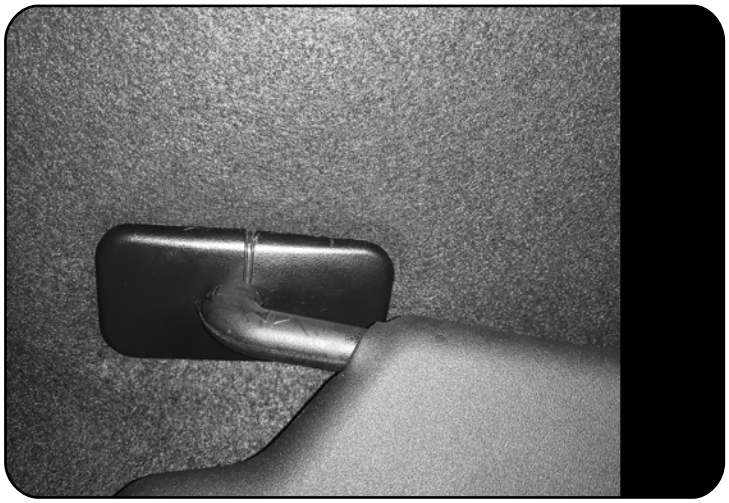

Sunviser.

© 2021 FRONT RUNNER VEHICLE OUTFITTERS

2 FIT AND SECURE

2.4

Rubber Weather Stripping around the door.

A pillar plastic trim as shown.

2.5

Seat belts.

2.6

B Pillar Plastic Trim as shown.

 © 2021 FRONT RUNNER VEHICLE OUTFITTERS

2 FIT AND SECURE

2.7

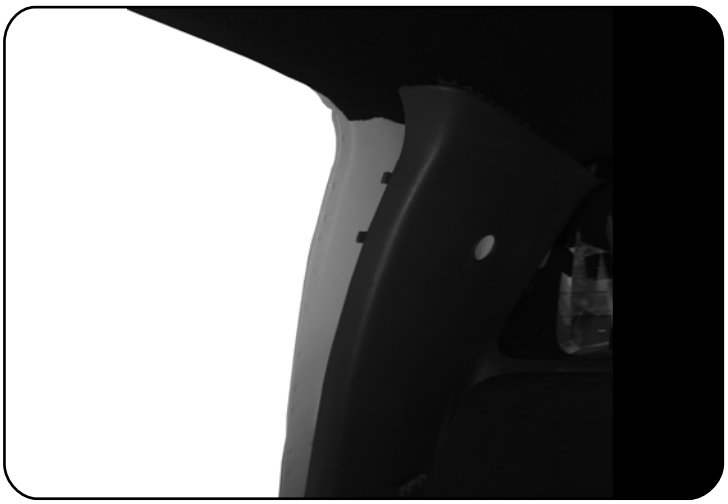

C Pillar Plastic Trim as shown.

2.8

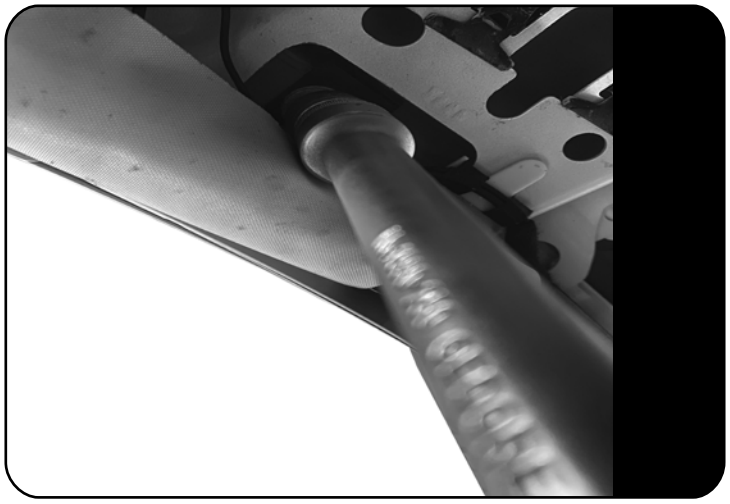

FOR WILDTRAK / THUNDER & MODELS WITH FACTORY FITTED ROOF RAILS.

Remove the 2 front fasteners securing the factory fitted roof rails.

2.9

FOR WILDTRAK / THUNDER & MODELS WITH FACTORY FITTED ROOF RAILS.

Remove the 2 rear fasteners securing the factory fitted roof rails.

© 2021 FRONT RUNNER VEHICLE OUTFITTERS

2 FIT AND SECURE

MODELS WITHOUT FACTORY MOUNTED RAILS

2.10

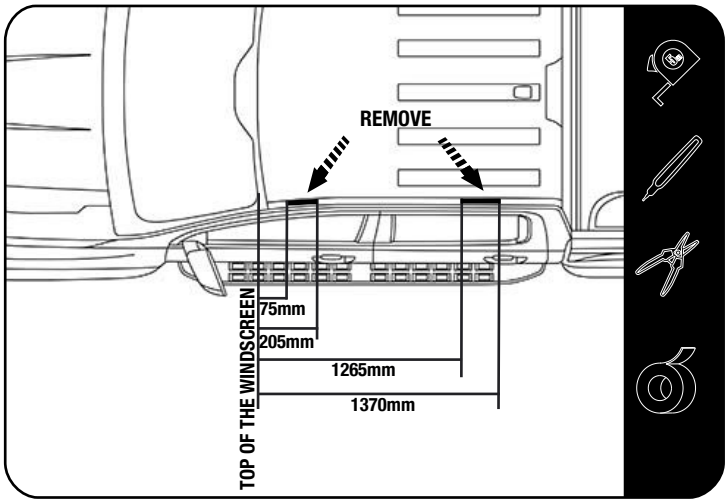

DITCH TRIM OPTION

Starting at the top edge of the vehicle's windscreen, measure and mark the dimensions as shown onto each of the ditch trim pieces.

Remove the two trim pieces and cut on each of your markings. Make sure to mark the various pieces so that you are able to place them back in their correct positions.

Refit the ditch trim pieces in place using double sided tape NOT SUPPLIED.

Make sure the ditch & trim is clean before applying the tape.

2.11

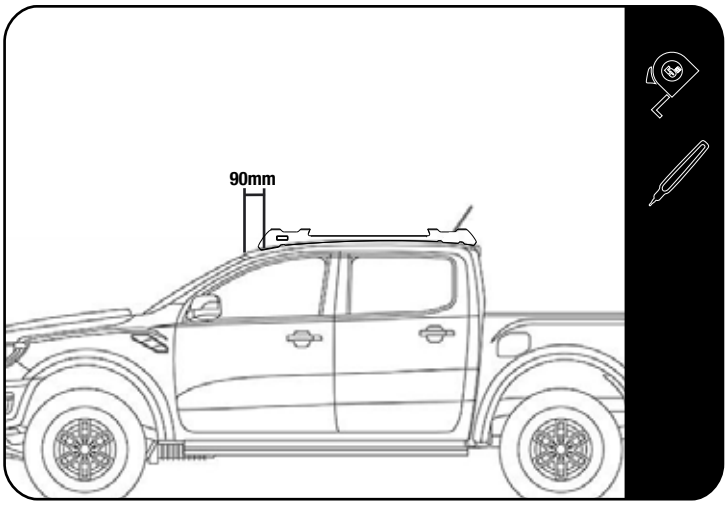

NO TRIM OPTION

Remove the two trim pieces and store for future use.

Starting at the top edge of the vehicle's windscreen, measure and mark the dimension as shown onto both LH / RH ditch centre's.

Place the foot rail on the vehicles roof lining up the front slot centre with the mark you made earlier and mark the centre of the remaining 3 slots.

Repeat this step with the opposite side.

2.12

Drill the 8 holes you marked, starting with a 4mm pilot hole before going to the 6mm hole. There is no need for a lot of downward pressure. Let the drill do the work.

Apply anti-rust to all the holes drilled.

© 2021 FRONT RUNNER VEHICLE OUTFITTERS

2 FIT AND SECURE

2.13

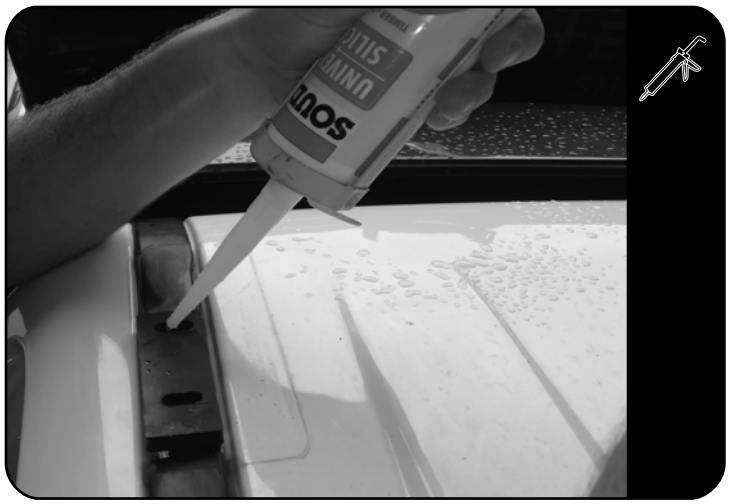

Clean the area around the holes in the vehicle's roof using a rag and denatured alcohol. Place some silicone around each hole in the vehicle's roof.

Position the spacers as shown in Fig 1.1 in the vehicle's ditch, aligning the cut outs in the spacers with the holes in the vehicle's roof.

Place some silicone in the cut outs of the spacers as shown.

2.14

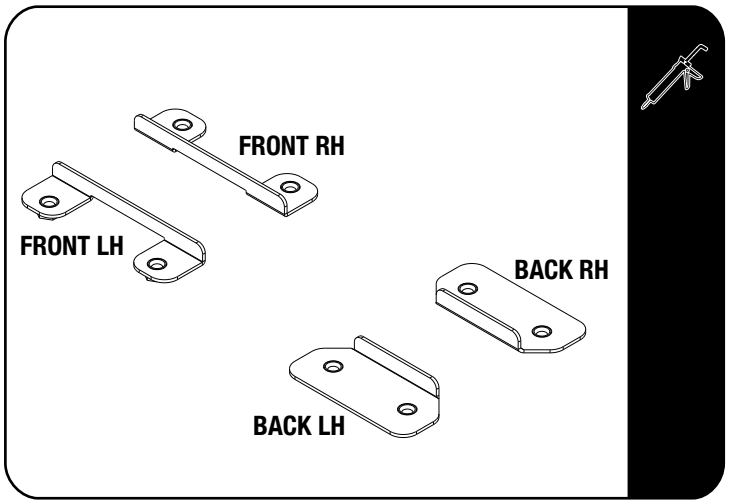

Place a bead of silicone on the four nut plates (Item 20 & 21). This will bond the nut plates in place, so that the headliner does not need to be removed in future, should you want to remove the rack.

2.15

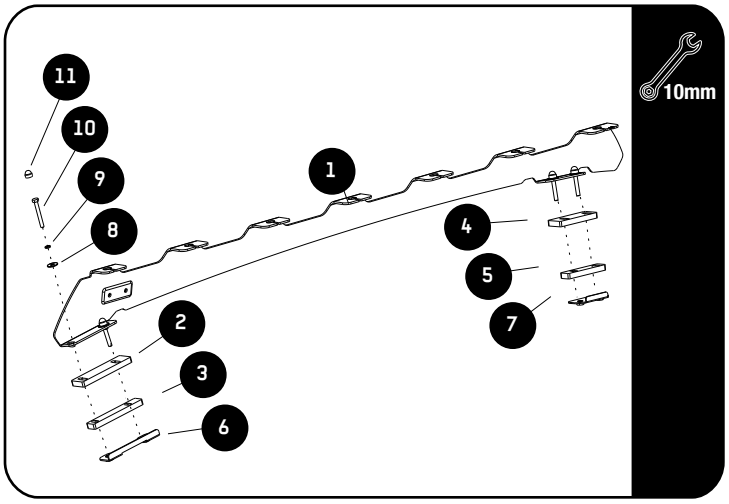

Have a friend position & hold the nut plates inside the car, while you secure the foot rail to the roof as instructed below.

Place a bead of silicone down the threads of each bolt before inserting.

Place the Foot Rail (Item 1) onto the Spacers (Item 2, 3, 4 & 5), aligning the holes in the base of the Foot Rail with the center of the Spacers.

Secure the Foot Rail to the vehicle using the M8x40 Hex Bolts, M8 Spring Washers & M8x19x2 Flat Washers (Items 8, 9 & 10). Fully tighten.

Place M8 nut caps (Item 5) over all nyloc

 © 2021 FRONT RUNNER VEHICLE OUTFITTERS

3 FIT AND SECURE

3.1

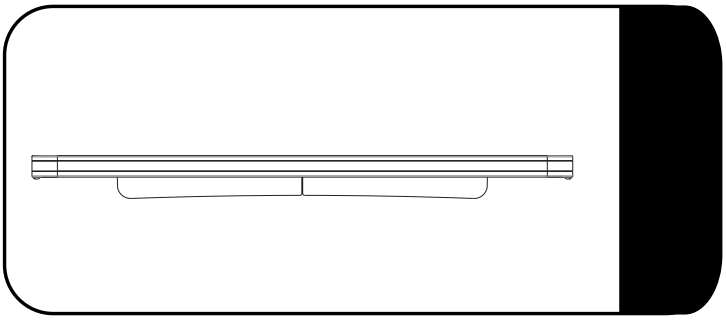

Make sure that the wind deflector is installed before you proceed to the next step.

3.2

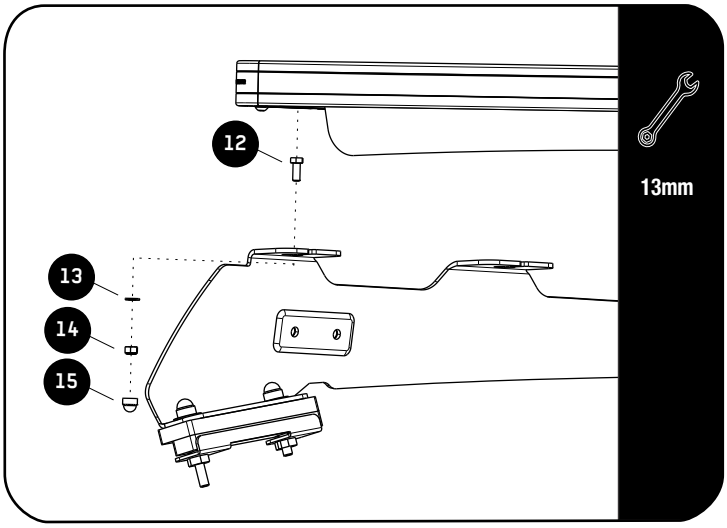

Secure your roof rack to the Foot Rails using M8 x 20 Hex Bolts, M8 x 16 x 1.6SS Flat Washers and M8 Nyloc Nuts (Items 12, 13 & 14).

3.3

Center the rack and tighten fully. Use M8 nut caps (Items 15) to finish off the nuts.

 © 2021 FRONT RUNNER VEHICLE OUTFITTERS

4 COMPLETION

4.1 Congratulations! You did it. Take a step back and admire your work!

5 INSTALL OTHER VEHICLE AND RACK ACCESSORIES

Now's the time to visit your favorite Front Runner Dealer in person or online.

IMPORTANT!

FRONT RUNNER RACK KITS OFTEN HAVE A HIGHER LOAD RATING THAN THE VEHICLES THEY ARE MOUNTED TO. PLEASE REFER TO YOUR SPECIFIC VEHICLE MANUFACTURER FOR A RECOMMENDED ROOF RATING. FRONT RUNNER CANNOT BE RESPONSIBLE FOR IMPROPER LOADING BEYOND THE VEHICLE MANUFACTURER'S STATED LOAD CAPACITY.

Be sure to tag us. We love to see our gear in action! #FrontRunnerOutfitters #BornToRoam

Share your adventures on:

© 2021 FRONT RUNNER VEHICLE OUTFITTERS