START HERE!

READ ME FIRST

Don't be a hero and muscle through this installation without reading these fitting instructions first! Improper installation of this gear may void certain aspects of your warranty.

Before you begin, take a moment and open all your Front Runner rack kit boxes and gather the assembly instructions for the various components.

A complete kit will contain:

1. A Front Runner Mounting System specific to your vehicle
2. A Front Runner Rack Tray or Load Bar Slats

This document will guide you through the assembly of the mounting system and assist you in fitting the roof rack tray or load bars to your specific vehicle.

Please refer to the next page for a list of all the components, quantities and tools required.

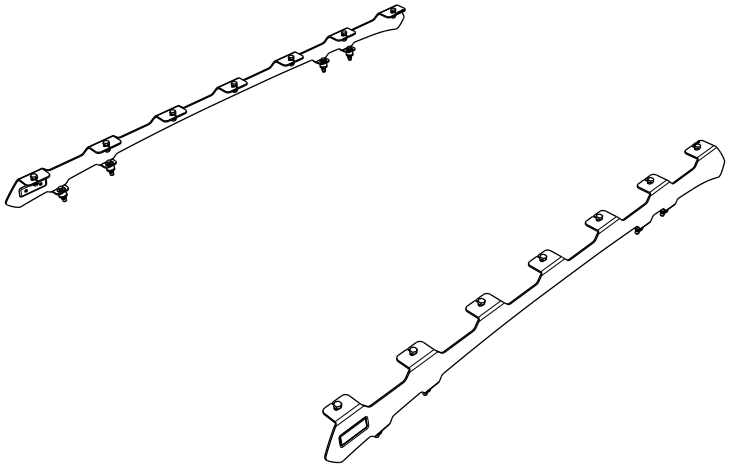

IMPORTANT WARNING! ⚠

IT IS CRITICAL THAT ALL FRONT RUNNER PRODUCTS BE PROPERLY AND SECURELY ASSEMBLED AND ATTACHED TO YOUR VEHICLE. IMPROPER ATTACHMENT COULD RESULT IN AN AUTOMOBILE ACCIDENT, AND COULD CAUSE SERIOUS BODILY INJURY OR DEATH. YOU ARE RESPONSIBLE FOR ASSEMBLING AND SECURING ALL FRONT RUNNER PRODUCTS TO YOUR VEHICLE, CHECKING THE ATTACHMENTS PRIOR TO USE, AND PERIODICALLY INSPECTING THE PRODUCTS FOR ADJUSTMENT, WEAR AND DAMAGE. THEREFORE, YOU MUST READ AND UNDERSTAND ALL OF THE INSTRUCTIONS AND PRECAUTIONS SUPPLIED WITH YOUR FRONT RUNNER PRODUCT PRIOR TO INSTALLATION OR USE. IF YOU DO NOT UNDERSTAND ALL OF THE INSTRUCTIONS AND CAUTIONS, OR IF YOU HAVE NO MECHANICAL EXPERIENCE AND ARE NOT THOROUGHLY FAMILIAR WITH THE INSTALLATION PROCEDURES, YOU SHOULD HAVE THE PRODUCT INSTALLED BY A PROFESSIONAL INSTALLER OR OTHER QUALIFIED PERSONNEL.

NOTE: Front Runner will not be responsible for any damage caused by the failure to install the product according to these instructions.
Please call us if you have any questions about the installation of this product.

 © 2021 FRONT RUNNER VEHICLE OUTFITTERS

1 GET ORGANIZED

USA SPEC

IN THE BOX

1	2 X	Foot Rail 1LH & 1RH
2	8 X	M6 Nut Cap
3	8 X	M6 x 35 Hex Bolt
4	8 X	M6 SS Spring Washer
5	12 X	M6 x 19 x 1SS Flat Washer
6	8 X	Spacer 19 x 12.58 x 12
7	8 X	M6 Jack Nut
8	14 X	M8 Nut Cap
9	14 X	M8 Nyloc Nut
10	14 X	M8 x 16 x 1.6SS Flat Washer
11	14 X	M8 x 20 Hex Bolt
12	1 X	Foot Rail Seal Kit
13	8 X	M8 x 19 x 2 Flat Washer
14	1 X	Installer Wrench
15	2 X	M8x30 Button Head
16	4 X	M8x20 Button Head

IN THE BOX

17	4 X	M6x12x1 Flat Washer
18	4 X	Universal Screw Cap
19	4 X	M6 Nyloc Nut

TOOLS NEEDED

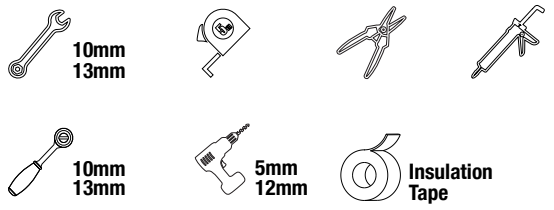

FIGURE 1.1

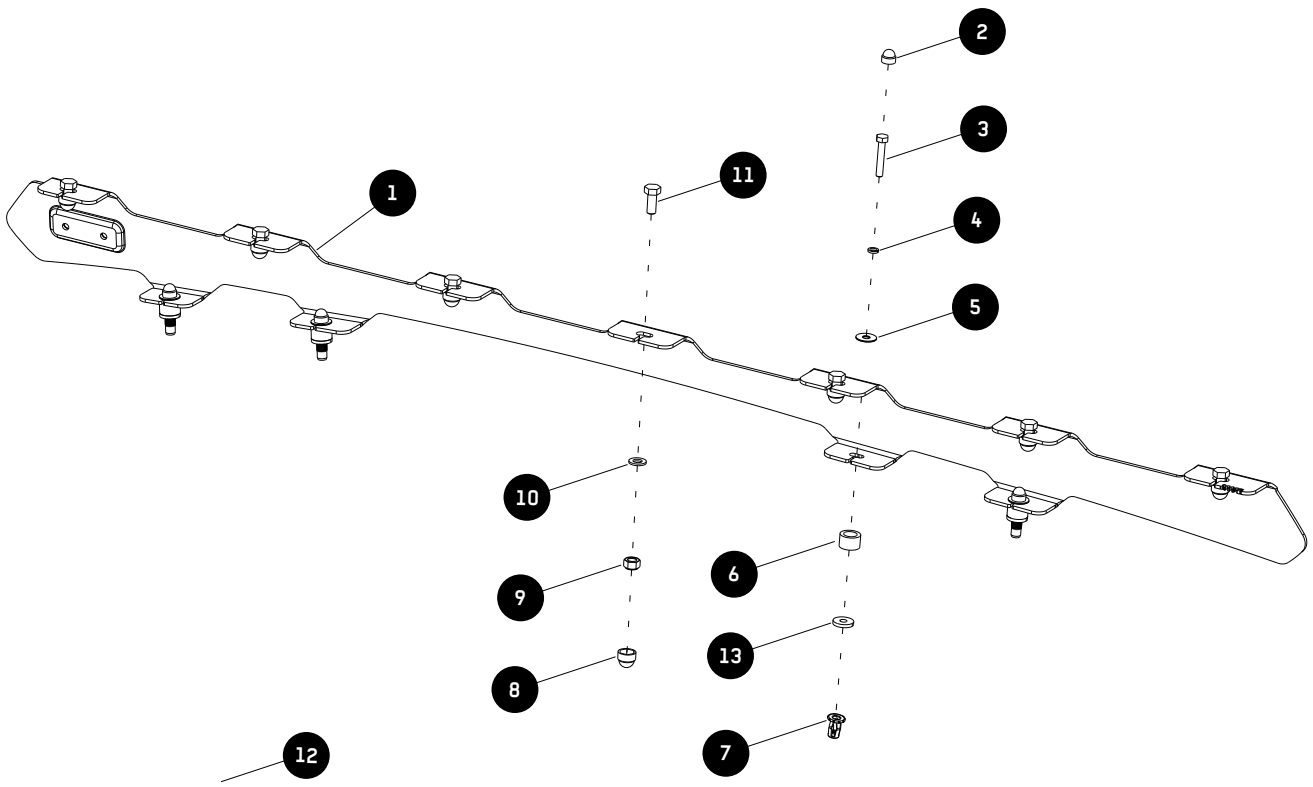

© 2021 FRONT RUNNER VEHICLE OUTFITTERS

1 GET ORGANIZED

RSA, AUS & EU SPEC

IN THE BOX

1	2 X	Foot Rail 1LH & 1RH
2	8 X	M6 Nut Cap
3	8 X	M6 x 35 Hex Bolt
4	8 X	M6 SS Spring Washer
5	12 X	M6 x 19 x 1SS Flat Washer
6	8 X	Spacer 19 x 12.58 x 12
7	8 X	M6 Rivnut
8	14 X	M8 Nut Cap
9	14 X	M8 Nyloc Nut
10	14 X	M8 x 16 x 1.6SS Flat Washer
11	14 X	M8 x 20 Hex Bolt
12	1 X	Foot Rail Seal Kit
13	8 X	M8 x 19 x 2 Flat Washer
14	1 X	Installer Wrench
15	2 X	M8x30 Button Head
16	4 X	M8x20 Button Head

IN THE BOX

17	4 X	M6x12x1 Flat Washer
18	4 X	Universal Screw Cap
19	4 X	M6 Nyloc Nut

TOOLS NEEDED

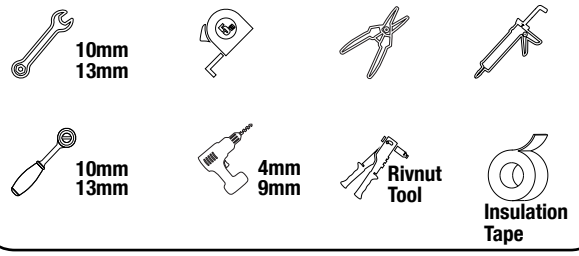

FIGURE 1.1

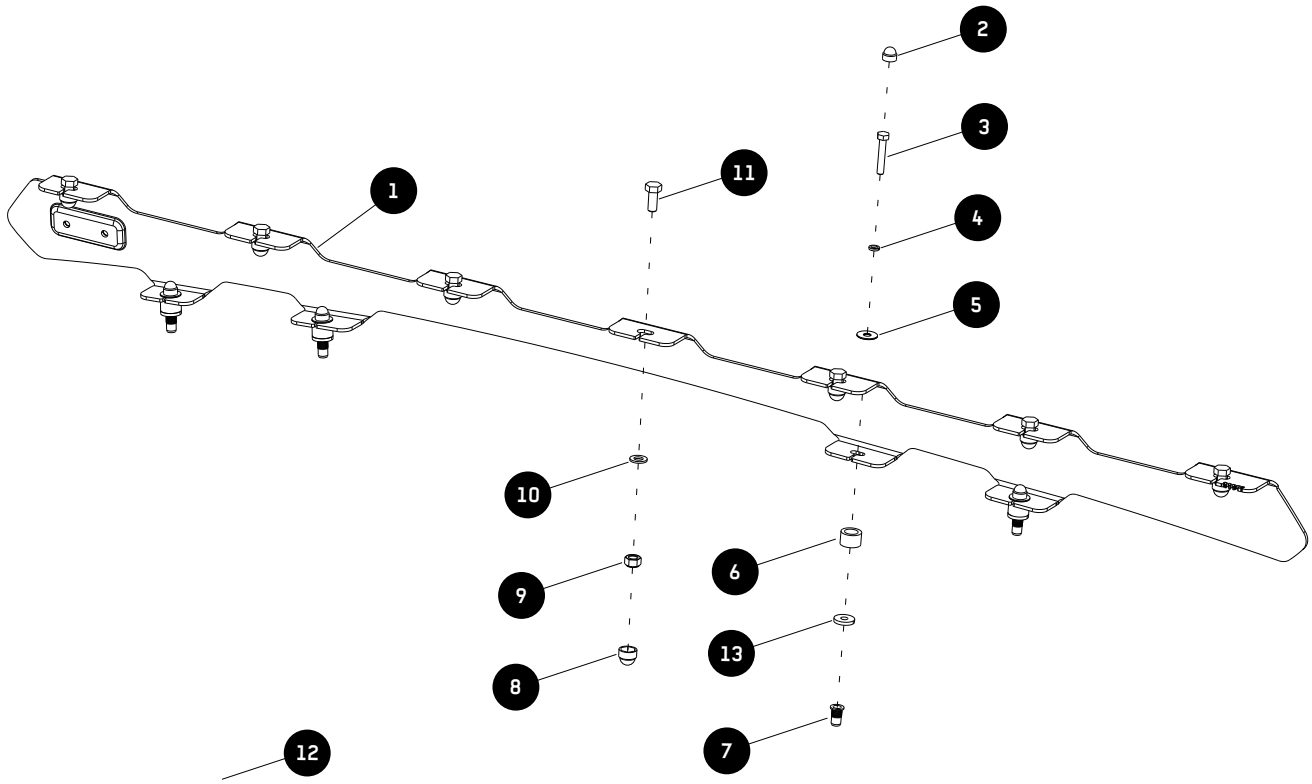

© 2021 FRONT RUNNER VEHICLE OUTFITTERS

2 FIT AND SECURE

ALL MODELS

2.1

Remove the following parts & trim

Front Grab Handles.

2.2

Sunvisor support brackets.

2.3

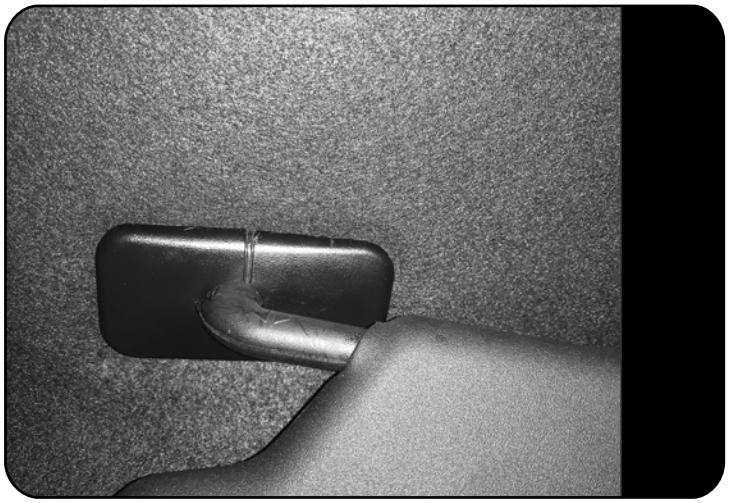

Sunviser.

© 2021 FRONT RUNNER VEHICLE OUTFITTERS

2 FIT AND SECURE

ALL MODELS

2.4

Rubber Weather Stripping around the door.

A pillar plastic trim as shown.

2.5

Seat belts.

2.6

Pillar Plastic Trim as shown.

© 2021 FRONT RUNNER VEHICLE OUTFITTERS

2 FIT AND SECURE

ALL MODELS

2.7

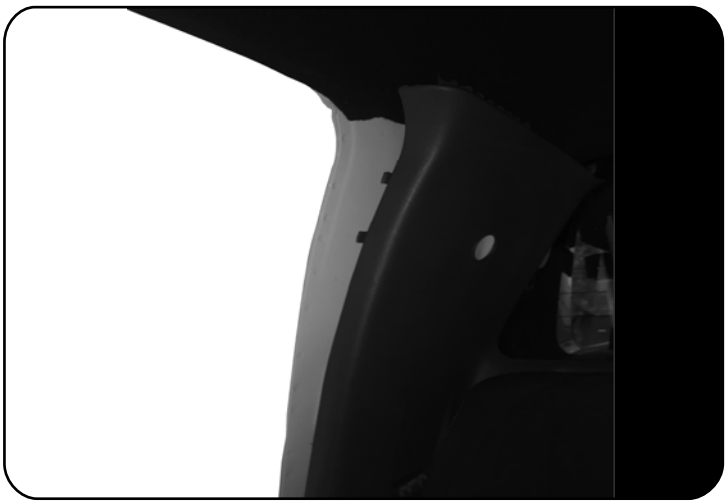

C Pillar Plastic Trim as shown.

2.8

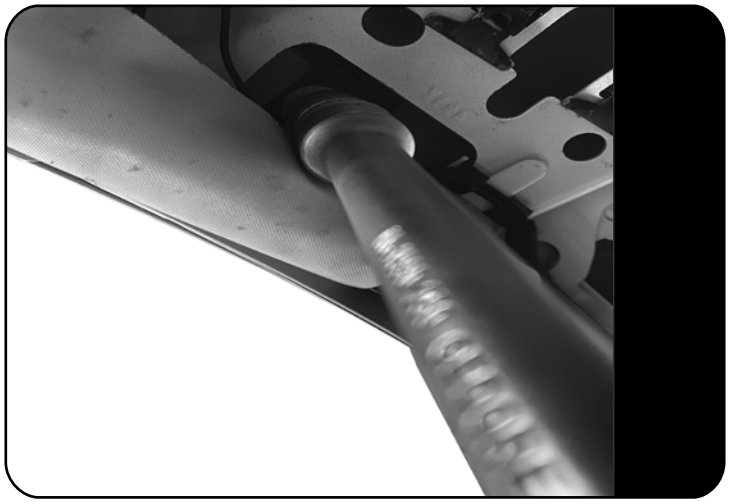

FOR WILDTRAK / THUNDER & MODELS WITH FACTORY FITTED

Remove the fasteners securing the factory mounted roof rails 2 front & 2 rear.

2.9

FOR USA MODELS ONLY

Remove the fasteners securing the factory plastic trim 1 front & 1 rear.

© 2021 FRONT RUNNER VEHICLE OUTFITTERS

2 FIT AND SECURE

USA SPEC

Ditch trim option

2.10

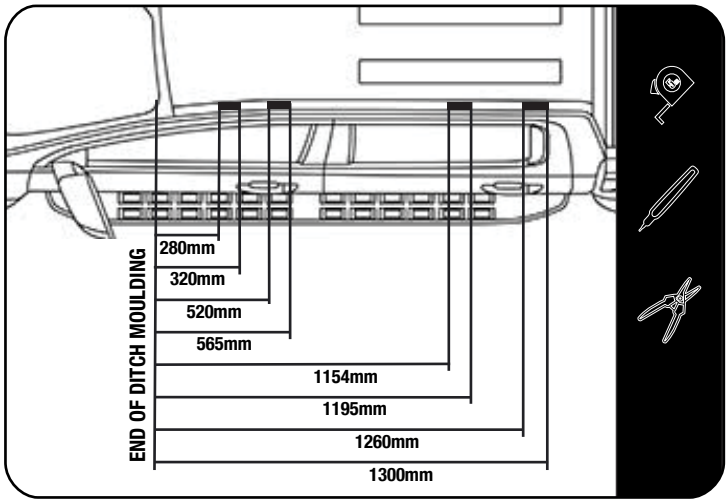

Starting at the front of the vehicle's roof, measure and mark the dimensions as shown onto each of the ditch mouldings.

Remove the two ditch mouldings and cut on each of your markings. Make sure to mark the various pieces so that you are able to place them back onto the vehicle in their correct positions.

No trim option

Remove the two ditch mouldings and store in a safe place.

2.11

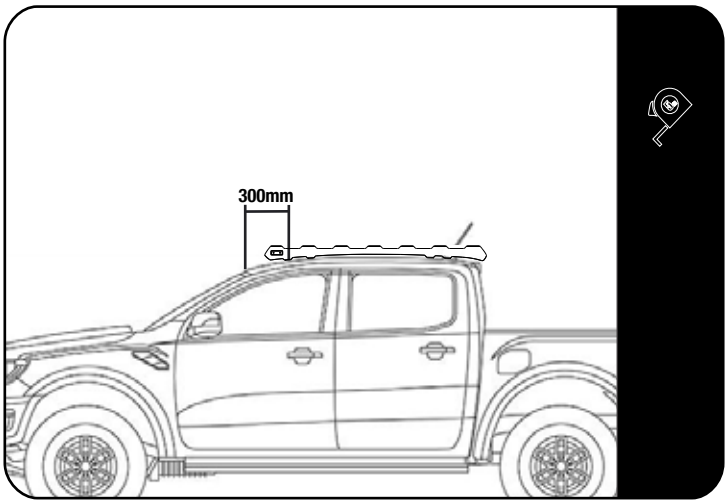

Starting at the top edge of the vehicle's windscreen, measure and mark the dimension as shown onto both LH / RH ditch centre's.

Place the foot rail on the vehicles roof lining up the front slot centre with the mark you made and mark the centre of the remaining 6 slots.

2.12

Before drilling the holes in the roof, take both 5 & 12 mm drill bits and wrap a band of insulation tape around the drill bits to act as a stopper to prevent you from drilling to deep as there are airbags located below where you will be drilling.

Drill the 8 holes you marked earlier, starting with a 4mm pilot hole before going to the 9mm hole. There is no need for a lot of downward pressure. Let the drill do the work.

© 2021 FRONT RUNNER VEHICLE OUTFITTERS

2.13

Insert a M6 button head bolt (Item 15) into the side of the installer wrench (Item 14). Loosely fit a jack nut (Item 7) to the button head bolt as shown.

Using the installer wrench and a M6x30 button head bolt, insert the M6 jack nuts into all 12 holes.

Using a cordless driver and a 4mm allen cordless bit, set the jack nut into the hole while holding onto the handle of the installer wrench

Make sure that the Jack Nut has pulled up all the way to the inside skin of the roof panel.

2.14

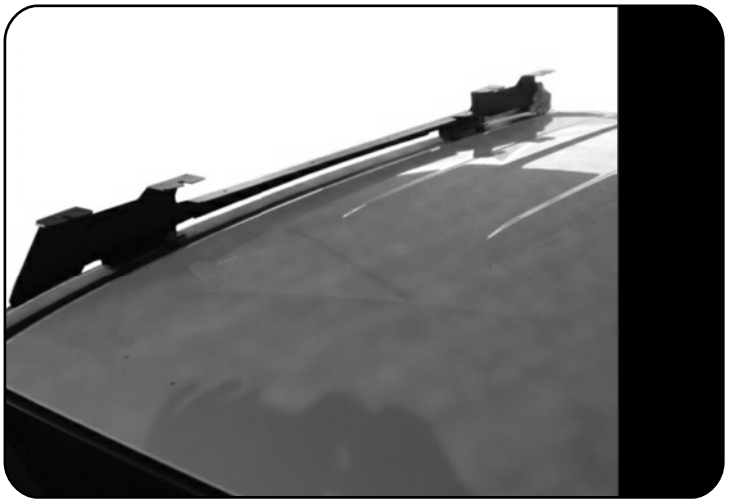

Place the various sections of ditch moulding back into position on the vehicle's roof.

Place a Cut Washer 19x6.5x3 (Item 13) centered over each M6 Rivnut (Item 7).

Place a Spacer (Item 6) over the Cut Washer 19x6.5x3 (Item 13), centre the Spacer with the Cut Washer.

Place the Foot Rails (Item 1) onto the Spacers, aligning the holes in the base of the Foot Rails with the center of the Spacer. The product sticker should be at the front of the vehicle and must face outward.

2.15

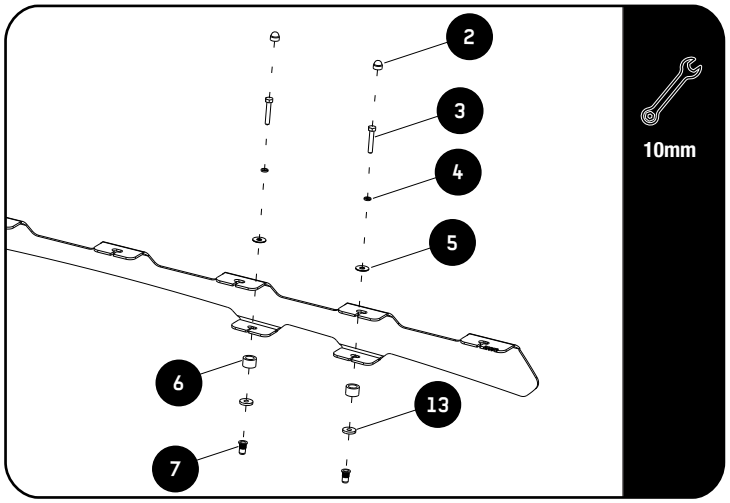

Place a bead of silicone onto the thread of each Hex Bolt before fastening.

Secure the Foot Rails to the vehicle using M6 x 35 Hex Bolts, M6 Spring Washers and M6 x 19 x 1SS Flat Washers (Items 3, 4 & 5).

Once fastened, place M6 Nut Caps (Item 2) over the head of each bolt.

© 2021 FRONT RUNNER VEHICLE OUTFITTERS

3 FIT AND SECURE

USA SPEC

3.1

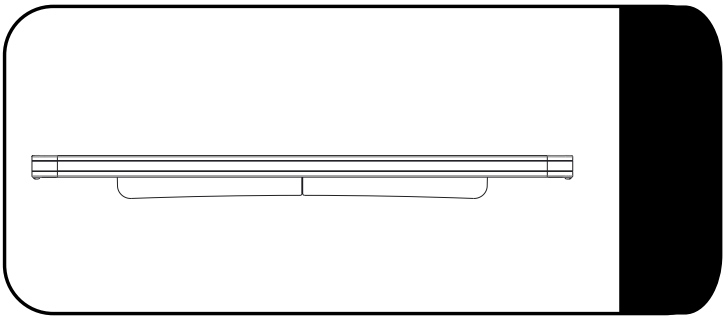

Make sure that the wind deflector is installed before you proceed to the next step.

3.2

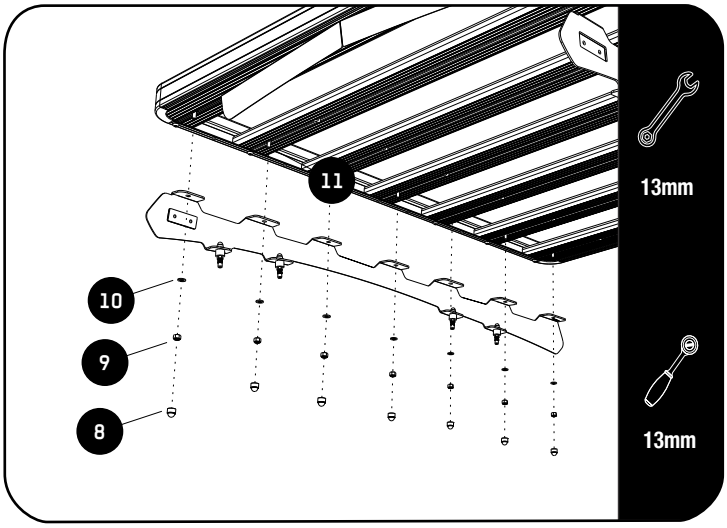

Fit your roof rack to the Foot Rails using M8 x 20 Hex Bolts, M8 x 16 x 1.6SS Flat Washers and M8 Nyloc Nuts (Items 9, 10 & 11).

3.3

Center the rack and tighten fully. Use M8 nut caps (Items 8) to finish off the nuts.

© 2021 FRONT RUNNER VEHICLE OUTFITTERS

4 FIT AND SECURE

RSA, AUS & EU SPEC

Ditch trim option

4.1

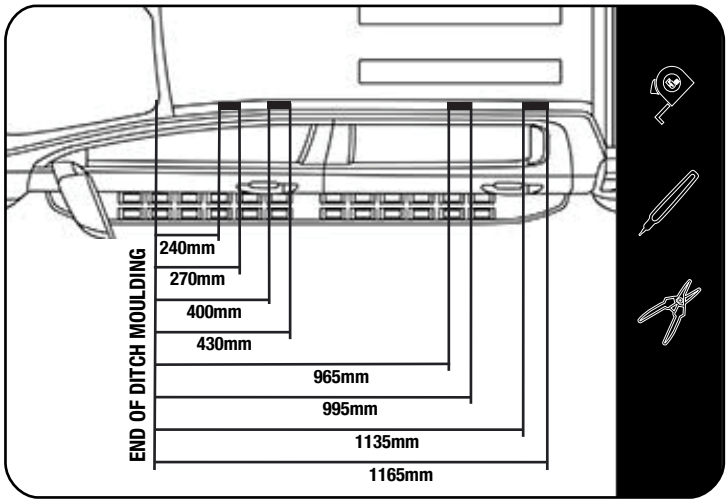

Starting at the front of the vehicle's roof, measure and mark the dimensions as shown onto each of the ditch mouldings.

Remove the two ditch mouldings and cut on each of your markings. Make sure to mark the various pieces so that you are able to place them back onto the vehicle in their correct positions.

No trim option

Remove the two ditch mouldings and store in a safe place.

4.2

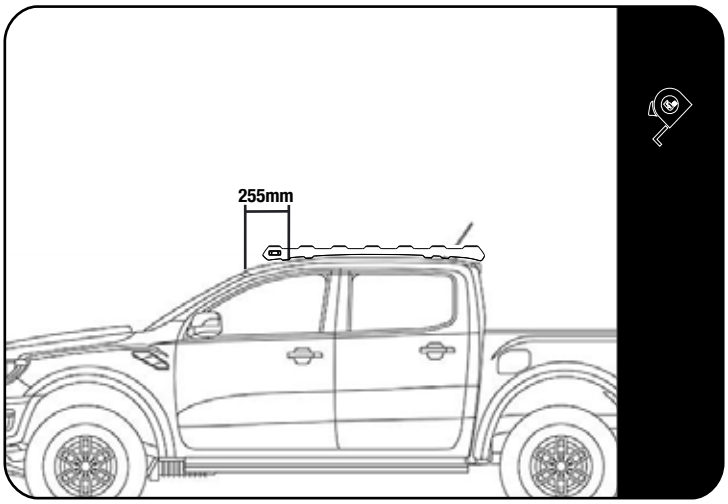

Starting at the top edge of the vehicle's windscreen, measure and mark the dimension as shown onto both LH / RH ditch centre's.

Place the foot rail on the vehicles roof lining up the front slot centre with the mark you made and mark the centre of the remaining 6 slots.

4.3

Before drilling the holes in the roof, take both 4 & 9 mm drill bits and wrap a band of insulation tape around the drill bits to act as a stopper to prevent you from drilling to deep as there are airbags located below where you will be drilling.

Drill the 8 holes you marked earlier, starting with a 4mm pilot hole before going to the 9mm hole. There is no need for a lot of downward pressure. Let the drill do the work.

© 2021 FRONT RUNNER VEHICLE OUTFITTERS

4.4

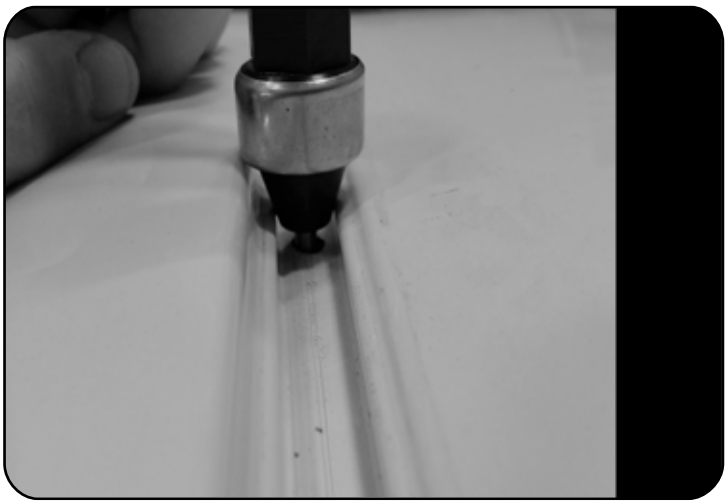

Using a Rivnut Tool, insert an M6 Rivnut (Item 7) into each of the eight 9mm holes drilled in Step 4.3.

4.5

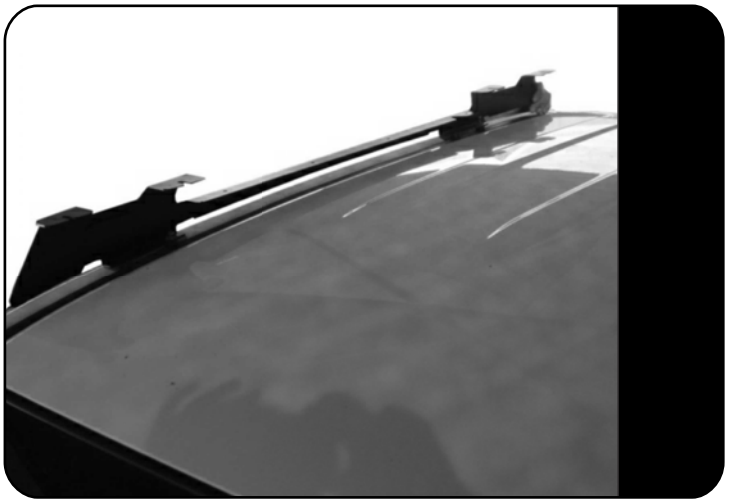

Place the various sections of ditch moulding back into position on the vehicle's roof.

Place a Cut Washer 19x6.5x3 (Item 13) centered over each M6 Jacknut (Item 7).

Place a Spacer (Item 6) over the Cut Washer 19x6.5x3 (Item 13), centre the Spacer with the Cut Washer.

Place the Foot Rails (Item 1) onto the Spacers, aligning the holes in the base of the Foot Rails with the center of the Spacer. The product sticker should be at the front of the vehicle and must face outward.

4.6

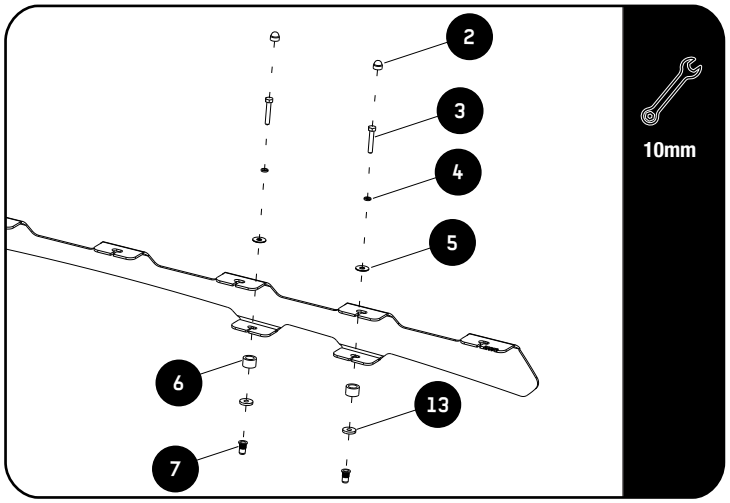

Place a bead of silicone onto the thread of each Hex Bolt before fastening.

Secure the Foot Rails to the vehicle using M6 x 35 Hex Bolts, M6 Spring Washers and M6 x 19 x 1SS Flat Washers (Items 3, 4 & 5).

Once fastened, place M6 Nut Caps (Item 2) over the head of each bolt.

 © 2021 FRONT RUNNER VEHICLE OUTFITTERS

5 FIT AND SECURE

RSA, AUS & EU SPEC

5.1

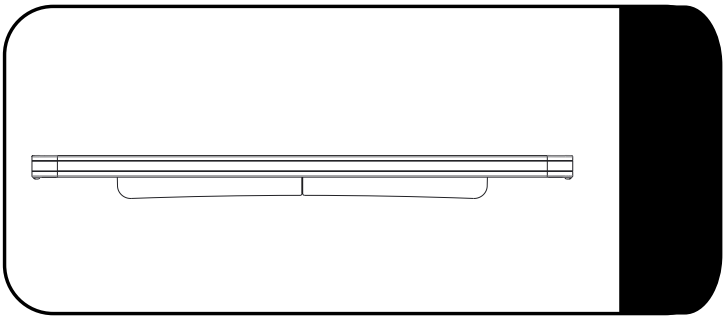

Make sure that the wind deflector is installed before you proceed to the next step.

5.2

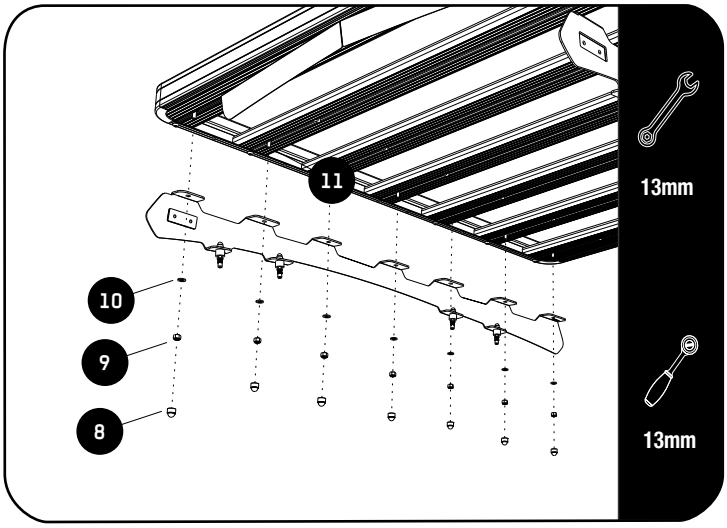

Fit your roof rack to the Foot Rails using M8 x 20 Hex Bolts, M8 x 16 x 1.6SS Flat Washers and M8 Nyloc Nuts (Items 9, 10 & 11).

5.3

Center the rack and tighten fully. Use M8 nut caps (Items 8) to finish off the nuts.

© 2021 FRONT RUNNER VEHICLE OUTFITTERS

6 COMPLETION

6.1 Congratulations! You did it. Take a step back and admire your work!

7 INSTALL OTHER VEHICLE AND RACK ACCESSORIES

Now's the time to visit your favorite Front Runner Dealer in person or online.

IMPORTANT! ⚠

FRONT RUNNER RACK KITS OFTEN HAVE A HIGHER LOAD RATING THAN THE VEHICLES THEY ARE MOUNTED TO. PLEASE REFER TO YOUR SPECIFIC VEHICLE MANUFACTURER FOR A RECOMMENDED ROOF RATING. FRONT RUNNER CANNOT BE RESPONSIBLE FOR IMPROPER LOADING BEYOND THE VEHICLE MANUFACTURER'S STATED LOAD CAPACITY.

Be sure to tag us. We love to see our gear in action! #FrontRunnerOutfitters #BornToRoam

Share your adventures on:

© 2021 FRONT RUNNER VEHICLE OUTFITTERS