START HERE!

READ ME FIRST

Don't be a hero and muscle through this installation without reading these fitting instructions first! Improper installation of this gear may void certain aspects of your warranty.

Before you begin, take a moment and open all your Front Runner rack kit boxes and gather the assembly instructions for the various components.

A complete kit will contain:

1. A Front Runner Mounting System specific to your vehicle
2. A Front Runner Rack Tray or Load Bar Slats

This document will guide you through the assembly of the mounting system and assist you in fitting the roof rack tray or load bars to your specific vehicle.

Please refer to the next page for a list of all the components, quantities and tools required.

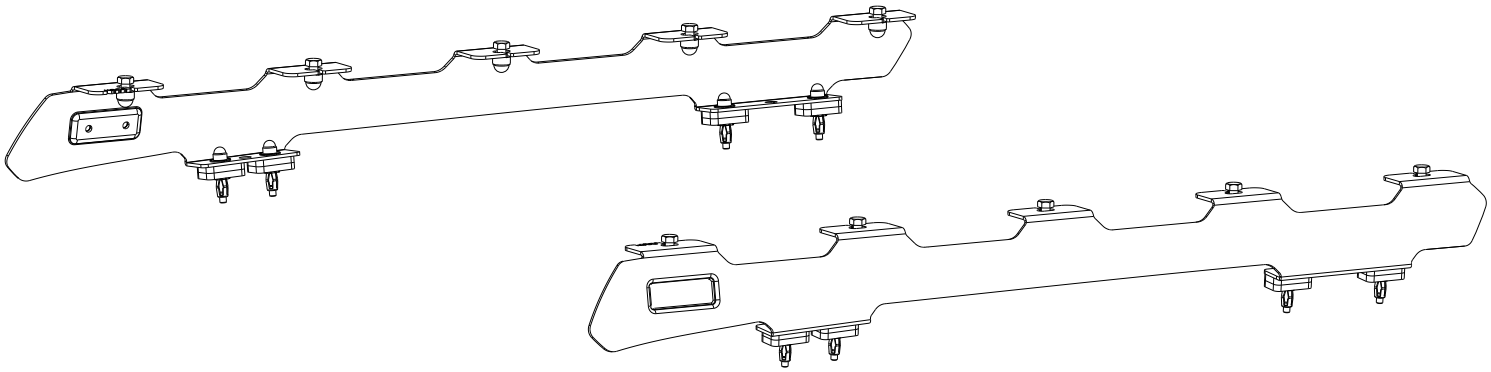

IMPORTANT WARNING! ⚠

IT IS CRITICAL THAT ALL FRONT RUNNER PRODUCTS BE PROPERLY AND SECURELY ASSEMBLED AND ATTACHED TO YOUR VEHICLE. IMPROPER ATTACHMENT COULD RESULT IN AN AUTOMOBILE ACCIDENT, AND COULD CAUSE SERIOUS BODILY INJURY OR DEATH. YOU ARE RESPONSIBLE FOR ASSEMBLING AND SECURING ALL FRONT RUNNER PRODUCTS TO YOUR VEHICLE, CHECKING THE ATTACHMENTS PRIOR TO USE, AND PERIODICALLY INSPECTING THE PRODUCTS FOR ADJUSTMENT, WEAR AND DAMAGE. THEREFORE, YOU MUST READ AND UNDERSTAND ALL OF THE INSTRUCTIONS AND PRECAUTIONS SUPPLIED WITH YOUR FRONT RUNNER PRODUCT PRIOR TO INSTALLATION OR USE. IF YOU DO NOT UNDERSTAND ALL OF THE INSTRUCTIONS AND CAUTIONS, OR IF YOU HAVE NO MECHANICAL EXPERIENCE AND ARE NOT THOROUGHLY FAMILIAR WITH THE INSTALLATION PROCEDURES, YOU SHOULD HAVE THE PRODUCT INSTALLED BY A PROFESSIONAL INSTALLER OR OTHER QUALIFIED PERSONNEL.

NOTE: Front Runner will not be responsible for any damage caused by the failure to install the product according to these instructions.

Please call us if you have any questions about the installation of this product.

 © 2023 FRONT RUNNER VEHICLE OUTFITTERS

1 GET ORGANIZED

IN THE BOX

1	1 X	Foot Rail - 1 RH
2	1 X	Foot Rail - 1 LH
3	10 X	M8 x 20 Hex Bolt
4	10 X	M8 x 16 x 1.6SS Flat Washer
5	10 X	M8 Nyloc Nut
6	10 X	M8 Nut Cap
7	8 X	M6 x 19 x 1 Flat Washer
8	8 X	M6 x 40 Hex Bolt
9	8 X	M6 Nut Cap Plastic
10	16 X	6mm Foot Rail Spacer
11	8 X	M6 Jack Nut
12	1 X	Jack Nut Tool
13	8 X	M6 x 30 Button Head Bolt

TOOLS NEEDED

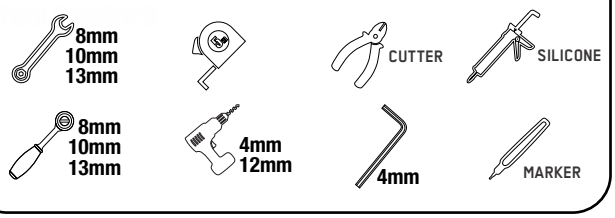

FIGURE 1.1

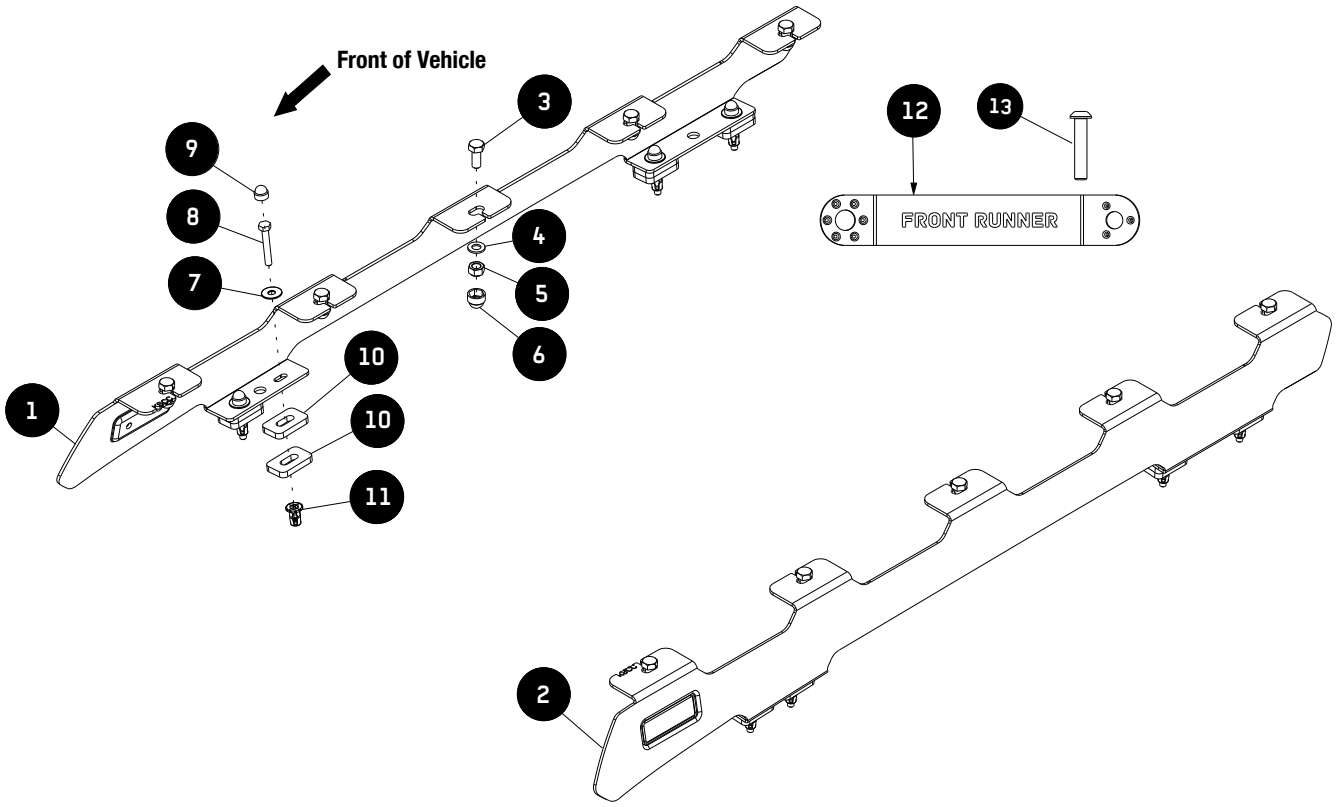

 © 2023 FRONT RUNNER VEHICLE OUTFITTERS

2 FIT AND SECURE FOOT RAIL 1999 - 2017 F250 / F350

2.1

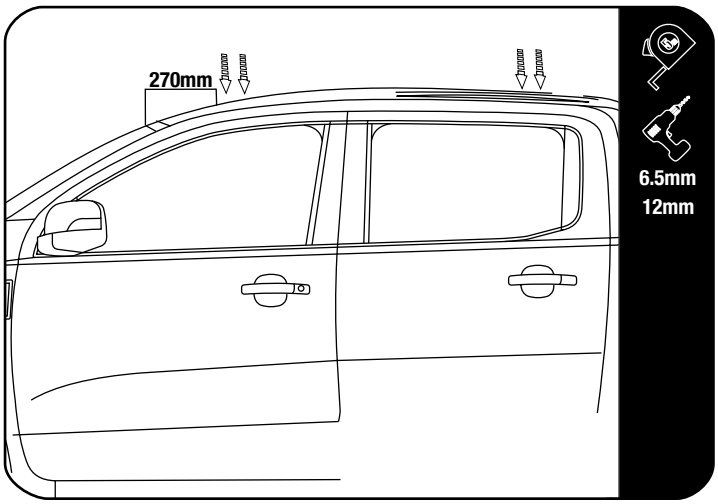

Measure 270mm from the top edge of the windshield and make a mark in the center of the ditch.

Position the Foot Rail in the ditch. Align the front mount hole in the Foot Rail with the mark made earlier and mark the remaining 3 holes.

Using Tape Cover the Drill Bit 10mm from the tip to prevent damage to the Roof Lining.

Remove the Foot Rail from the vehicle. Drill a 6.5mm pilot hole in the center of the markings. Open the holes using a 12mm Drill.

Remove the Ditch Mold From the Roof.

2.2

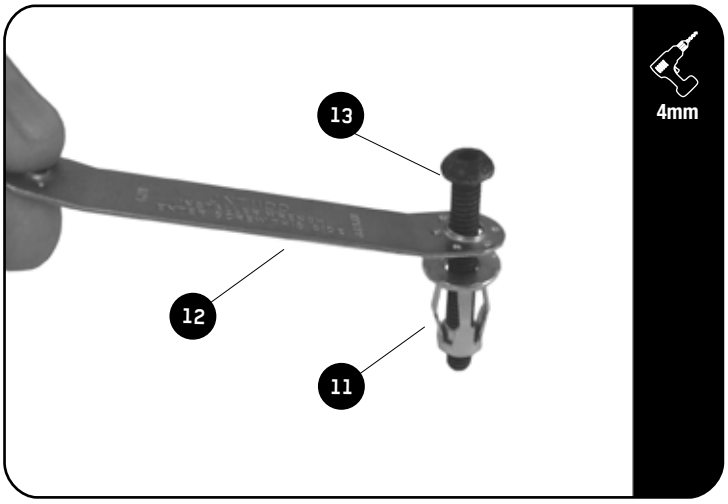

Insert the M6 Button Head Bolt (Item 13) into the one side of the Installer Wrench (Item 12). Loosely fit a Jack Nut (Item 11) to the Button Head Bolt as shown.

Using the Installer Wrench and a M6 x 30 Button Head Bolt, insert the M6 Jack Nuts into all 12 holes.

Place the assembly into a hole drilled in 2.1. Using a Battery Powered Driver and 4mm Allen Key Bit, set the Jack Nut into the hole while holding onto the handle of the Installer Wrench

Make sure that the Jack Nut has pulled up all the way to the inside skin of the roof panel.

2.3

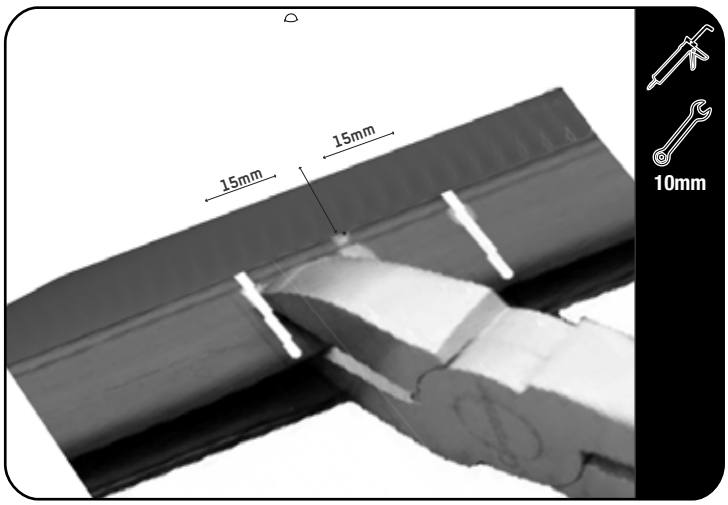

Some models have a mastic sealant in the ditch others have a plastic trim piece. If the plastic trim is present mark 15mm either side of the 6mm hole drilled in step 2.1. Cut out the section marked using a craft knife or sharp shear. Clean the area around each mounting point with denatured alcohol and a rag.

Refit the trim pieces, use VHB tape if needed to secure trim pieces.

© 2023 FRONT RUNNER VEHICLE OUTFITTERS

2 FIT AND SECURE FOOT RAIL 2018 - CURRENT F250 / F350

2.4

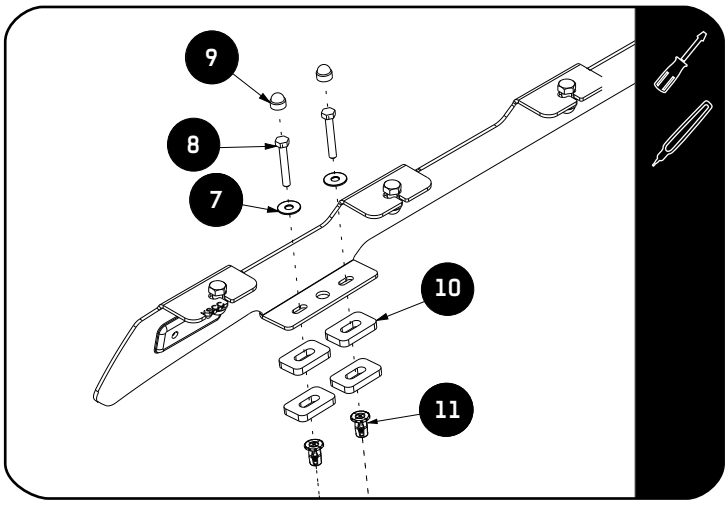

Place silicon around all the jack nuts installed in 2.2 to insure a good seal.

Place two 6mm spacers (Item 10) over each jack nut and fill the slots in the spacers with silicon.

Place the foot rail over the spacers and secure using M6 x 40 hex bolts and M6 x 19 flat washers (Item 7, 8 & 9). Fully tighten all fasteners continue to install the rack using the fitment guide included, when all fasteners are fully tightened place nut caps over all fasteners

Tightening Torque:

M6 : 8-10Nm / 5.9 ft lb - 7.38 ft lb

2.5

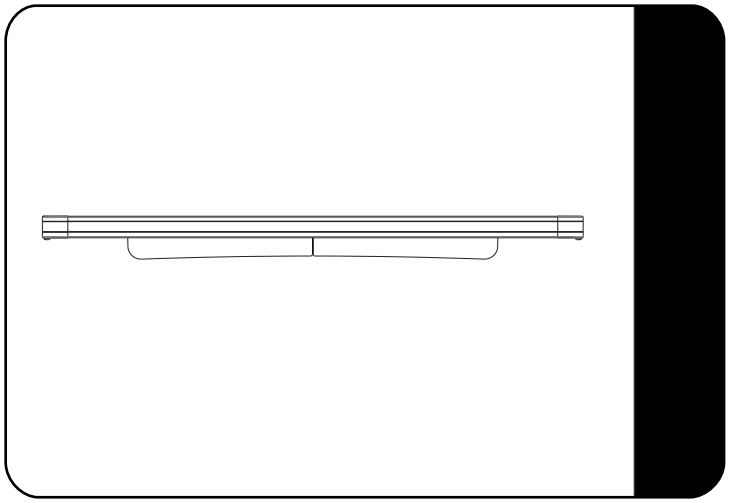

Make sure that the wind deflector is installed before you proceed to the next step.

Refer to Rack Fitment Guide.

2.6

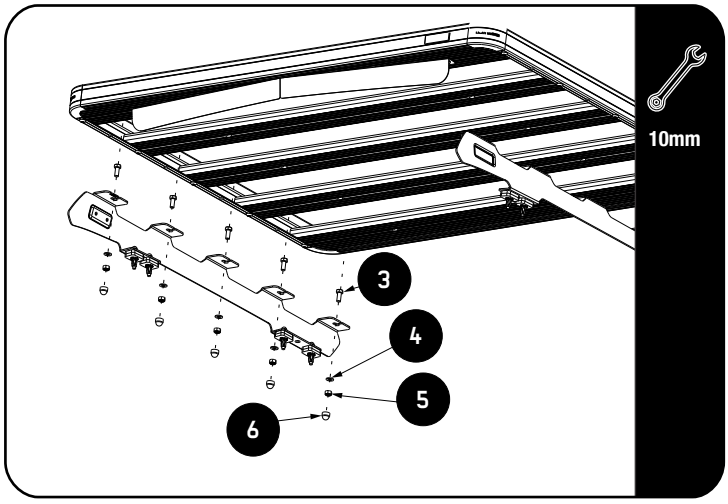

Fit your Roof Rack to the Foot Rails using M8 x 20 Hex Bolts, M8 x 16 x 1.6SS Flat Washers and M8 Nyloc Nuts (Items 3, 4 & 5).

Place M8 Nut Caps (Item 6) on all exsposed M8 Nyloc Nuts.

Tightening Torque:

M8 : 15-20Nm / 11.06 ft lb - 14.75 ft lb

© 2023 FRONT RUNNER VEHICLE OUTFITTERS

3 COMPLETION

3.1 Congratulations! You did it. Take a step back and admire your work!

4 INSTALL OTHER VEHICLE AND RACK ACCESSORIES

Now's the time to visit your favorite Front Runner Dealer in person or online.

IMPORTANT!

Front Runner rack kits often have a higher load rating than the vehicles they are mounted to. Please refer to your specific vehicle manufacturer for a recommended roof load rating. Front Runner cannot be responsible for improper loading beyond the vehicle manufacturer's stated load capacity.

Be sure to tag us. We love to see our gear in action! #FrontRunnerOutfitters #BornToRoam

Share your adventures on:

© 2023 FRONT RUNNER VEHICLE OUTFITTERS