START HERE!

READ ME FIRST

Don't be a hero and muscle through this installation without reading these fitting instructions first! Improper installation of this gear may void certain aspects of your warranty.

Before you begin, take a moment and open all your Front Runner rack kit boxes and gather the assembly instructions for the various components.

A complete kit will contain:

1. A Front Runner Mounting System specific to your vehicle
2. A Front Runner Rack Tray or Load Bar Slats

This document will guide you through the assembly of the mounting system and assist you in fitting the roof rack tray or load bars to your specific vehicle.

Please refer to the next page for a list of all the components, quantities and tools required.

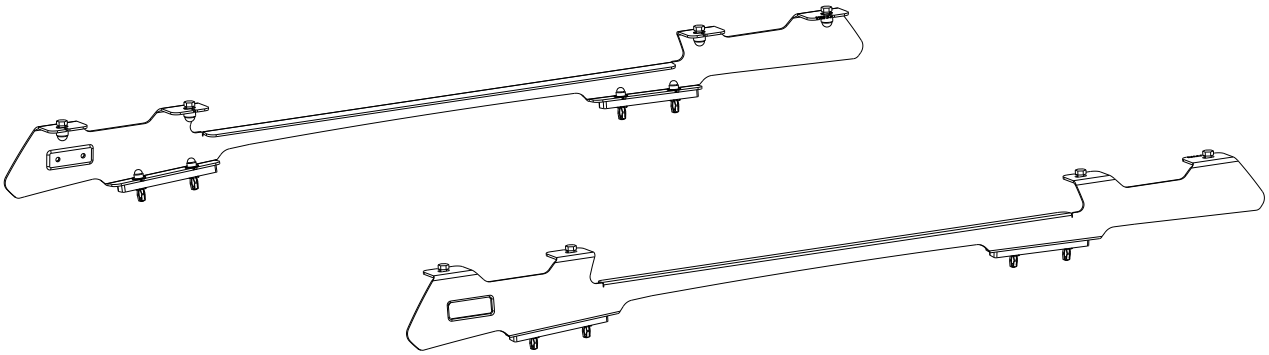

IMPORTANT WARNING! ⚠

IT IS CRITICAL THAT ALL FRONT RUNNER PRODUCTS BE PROPERLY AND SECURELY ASSEMBLED AND ATTACHED TO YOUR VEHICLE. IMPROPER ATTACHMENT COULD RESULT IN AN AUTOMOBILE ACCIDENT, AND COULD CAUSE SERIOUS BODILY INJURY OR DEATH. YOU ARE RESPONSIBLE FOR ASSEMBLING AND SECURING ALL FRONT RUNNER PRODUCTS TO YOUR VEHICLE, CHECKING THE ATTACHMENTS PRIOR TO USE, AND PERIODICALLY INSPECTING THE PRODUCTS FOR ADJUSTMENT, WEAR AND DAMAGE. THEREFORE, YOU MUST READ AND UNDERSTAND ALL OF THE INSTRUCTIONS AND PRECAUTIONS SUPPLIED WITH YOUR FRONT RUNNER PRODUCT PRIOR TO INSTALLATION OR USE. IF YOU DO NOT UNDERSTAND ALL OF THE INSTRUCTIONS AND CAUTIONS, OR IF YOU HAVE NO MECHANICAL EXPERIENCE AND ARE NOT THOROUGHLY FAMILIAR WITH THE INSTALLATION PROCEDURES, YOU SHOULD HAVE THE PRODUCT INSTALLED BY A PROFESSIONAL INSTALLER OR OTHER QUALIFIED PERSONNEL.

NOTE: Front Runner will not be responsible for any damage caused by the failure to install the product according to these instructions.

Please call us if you have any questions about the installation of this product.

 © 2020 FRONT RUNNER VEHICLE OUTFITTERS

1 GET ORGANIZED

IN THE BOX

1	2 X	Foot Rail 1LH + 1RH
2	8 X	M6 x 19 x 1SS Flat Washer
3	8 X	M6 Spring Washer
4	8 X	M6 x 35 Hex Bolt
5	8 X	M6 Nut Cap
6	8 X	M8 x 20 Hex Bolt
7	9 X	M6 Jack Nut
8	4 X	Spacer
9	8 X	M8 Nut Cap
10	8 X	M8 Nyloc Nut
11	8 X	M8 Flat Washer
12	2 X	M6 x 30 Button Head Screw
13	1 X	M6 Jack Nut Tool

TOOLS NEEDED

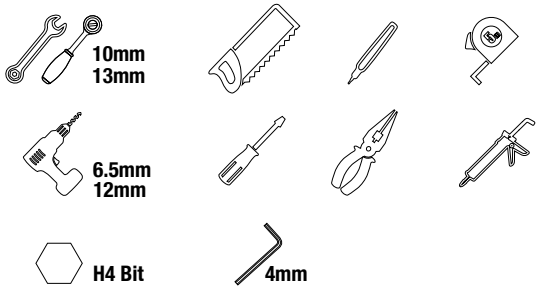

FIGURE 1.1

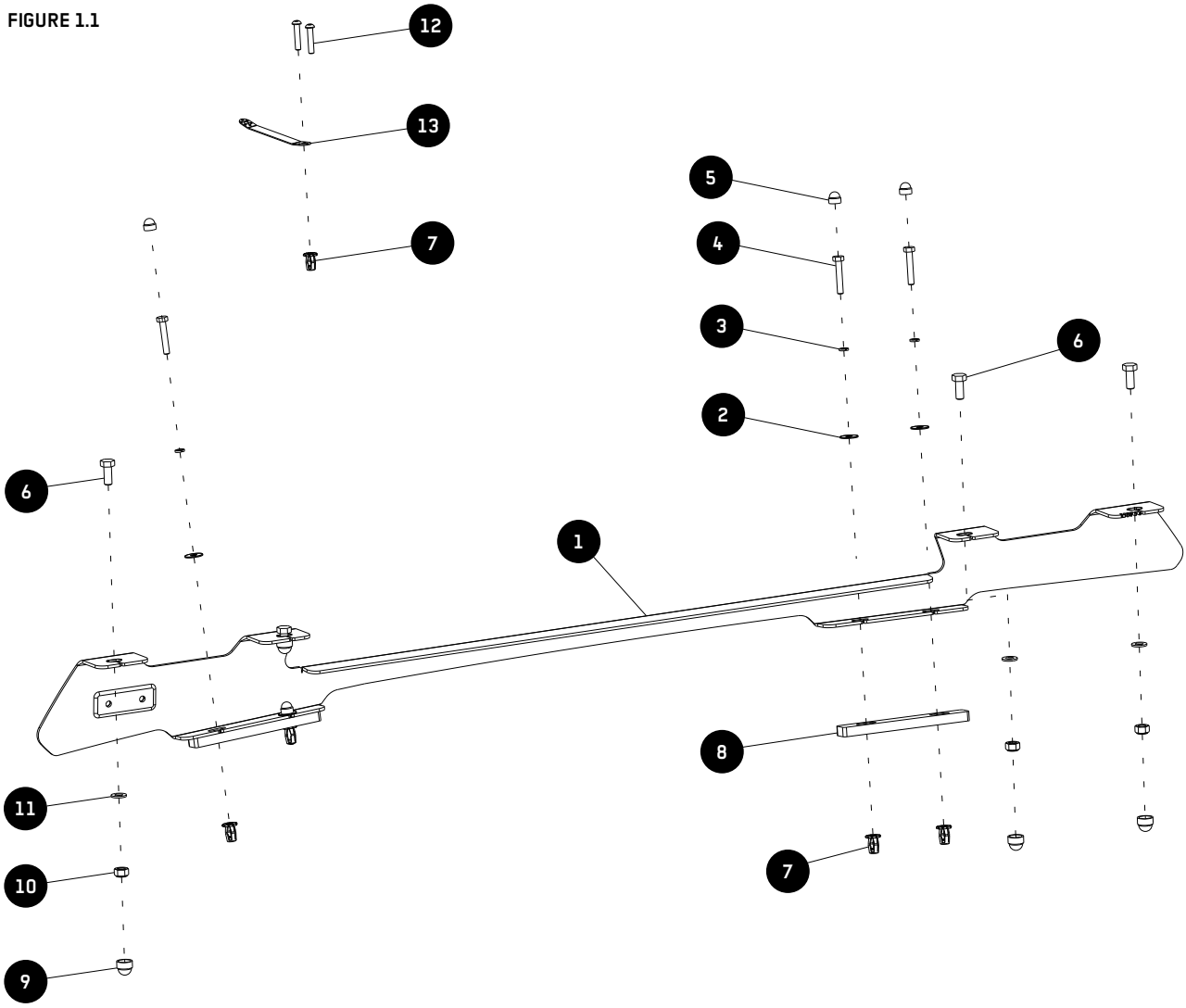

 © 2020 FRONT RUNNER VEHICLE OUTFITTERS

2 FIT AND SECURE

2.1

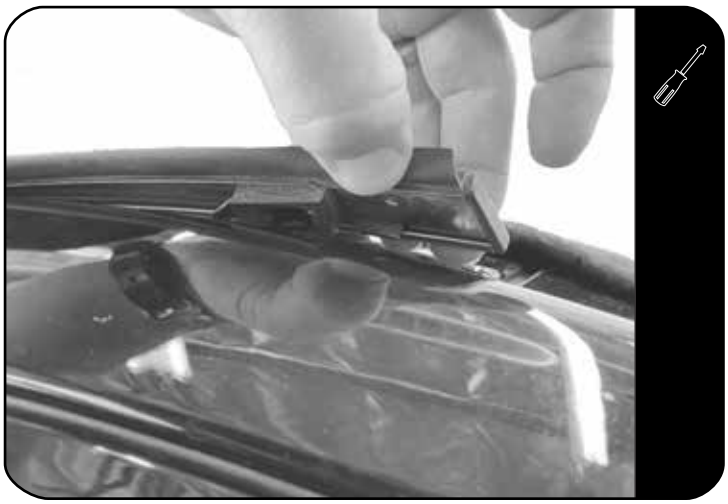

Using a flat screw driver and starting from the front of the vehicle, lift and remove the two ditch moldings running along either side of the roof.

2.2

Remove all the retaining clips using a long nose plier as shown.

2.3

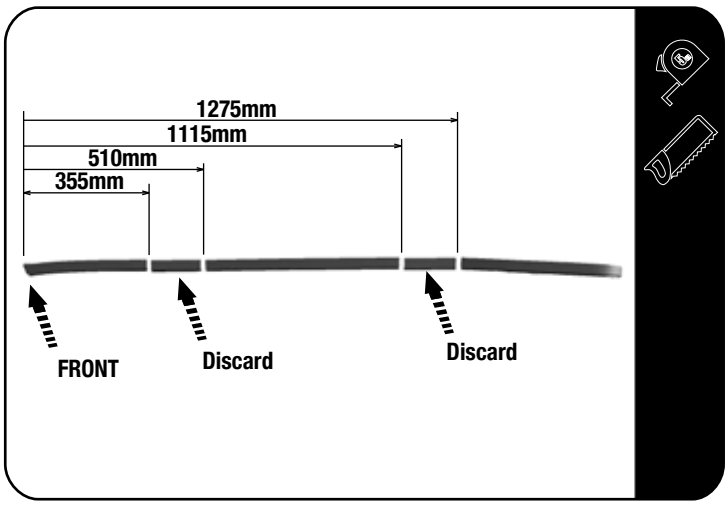

Lay the righthand ditch moulding on an even surface. From the front tip of the ditch moulding, measure and mark as shown.

Using a hacksaw, cut the ditch moulding at each marking.

Discard the two smaller pieces and refit the retaining clips to the three cut ditch mouldings making sure the retaining clips line up with the clip pins in the ditch.

Repeat this for the lefthand moulding.

 © 2020 FRONT RUNNER VEHICLE OUTFITTERS

2 FIT AND SECURE

2.4

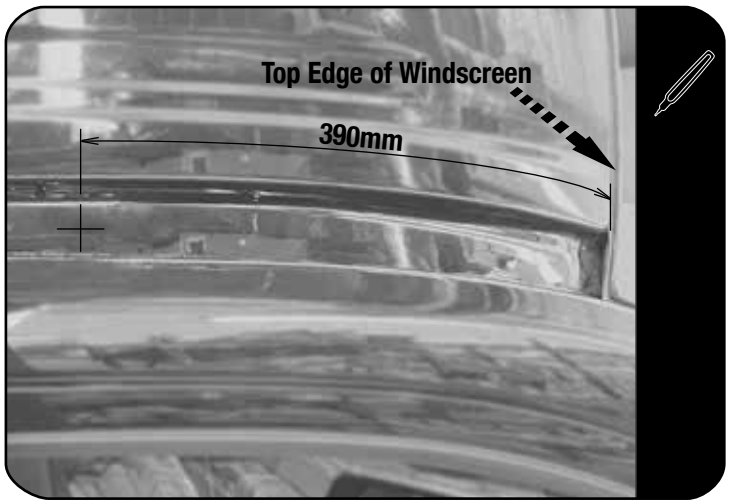

Mark the middle of the ditch by measuring 390mm from the top edge of the windscreen.

2.5

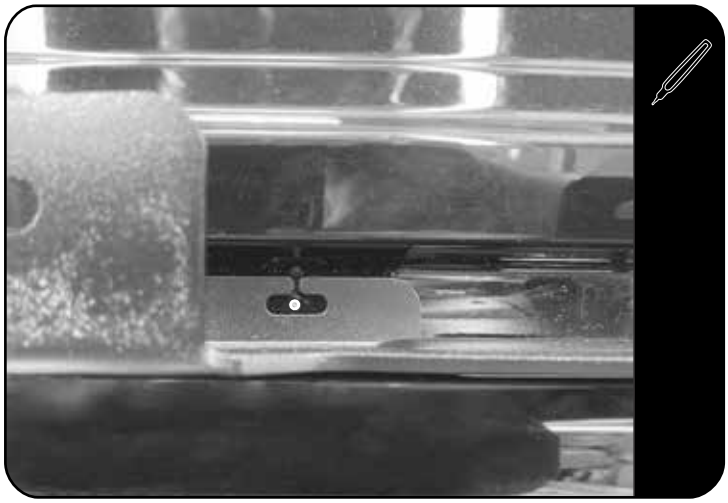

Place the Foot Rail (Item 1) inside the ditch. Centralize the first slot of the Foot rail mounting foot with the mark.

Mark the remaining slot centres and remove the Foot Rail.

2.6

Verify that the markings line up with the slots in the Spacers (Item 8) before drilling the mounting holes.

Remove the Spacers from the vehicle. Drill a 6.5mm pilot hole in the center of the markings. Open the holes using a 12mm Drill.

 © 2020 FRONT RUNNER VEHICLE OUTFITTERS

2 FIT AND SECURE

2.5

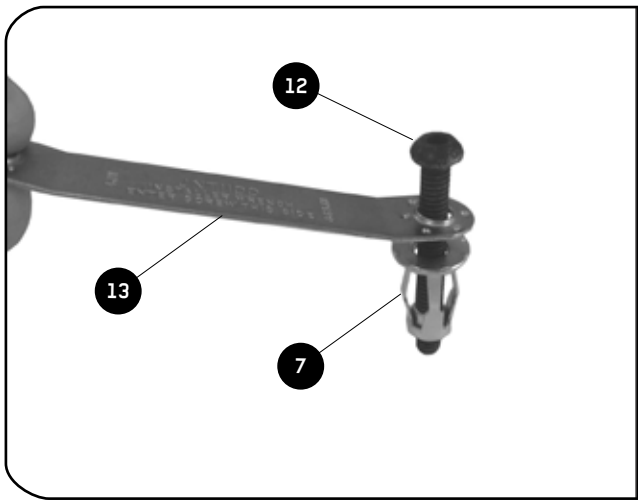

Insert the M6 Button Head Bolt (Item 12) into the one side of the Jack Nut Tool (Item 13). Loosely fit a Jack Nut (Item 7) to the Button Head Bolt as shown. Using the Jack Nut Tool and a M6 x 30 Button Head Bolt, insert the M6 Jack Nuts into all 8 holes. Place the assembly into the hole drilled. Using a Battery Powered Screw Driver and a H4 Allen Key Bit, set the Jack Nut into the hole while holding onto the handle of the Jack Nut Tool.

Make sure the Jack Nut has pulled up all the way to the inside skin of the roof panel.

2.6

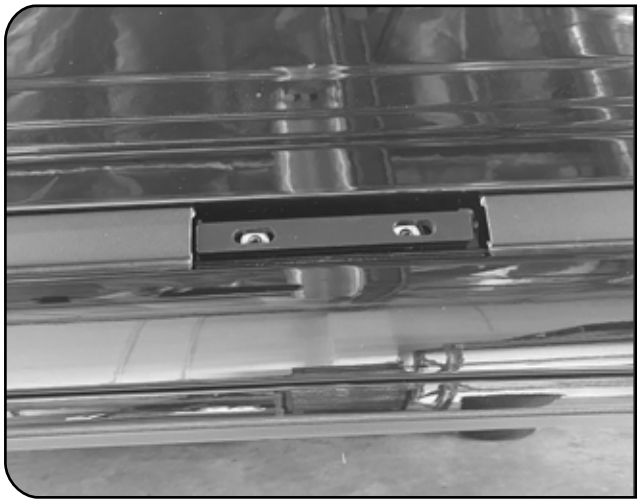

Place the four Spacers (Item 8) back on top of the inserted Jack Nuts in 2.5. Fit the three pieces of the ditch moulding cut in 2.3. With the ditch moulding in place, remove the Spacers.

2.7

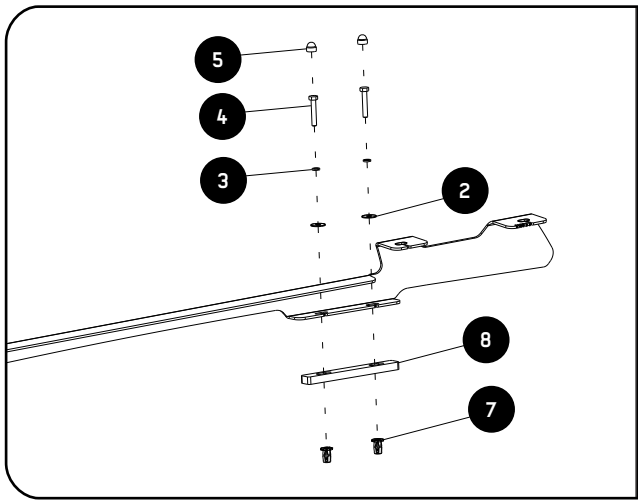

10mm

Place a bead of silicone around each of the Jack Nut openings inserted earlier in Step 2.5.

To fit the Foot Rails (Item 1LH & 1RH), place the Spacers (Item 8) over the Jack Nuts inserted in Step 2.5, followed by the Foot Rail (Item 1).

Place silicone on the threads of the M6x35 Hex Bolts (Item 4) and secure the Foot Rail using M6x35 Hex Bolts, M6 Spring Washers and M6x19x1SS Flat Washers (Items 4, 3 & 2).

Do this on both the left and right side of the vehicle.

Finish off by placing M6 Nut Caps (Item 5) on the M6 Hex Bolt heads.

To fit the Rack, proceed to Step 3.

 © 2020 FRONT RUNNER VEHICLE OUTFITTERS

3 FIT AND SECURE

3.1

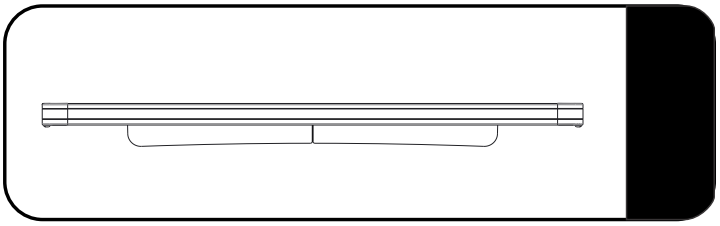

Make sure that the wind deflector is installed before you proceed to the next step.

3.2

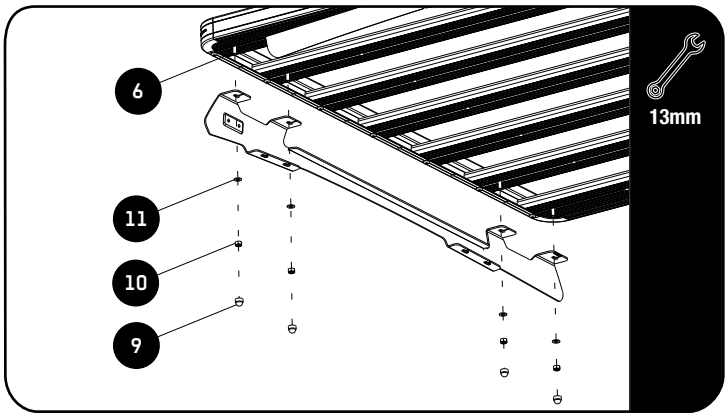

Fit your Roof Rack to the Foot Rails using M8x20 Hex Bolts, M8x16x1.6SS Flat Washers and M8 Nyloc Nuts (Items 6, 11 & 10) as shown.

3.3

Center the rack and tighten fully. Finish off by fitting the M8 Nut Caps (Item 9) on the M8 Nyloc Nuts.

4 INSTALL OTHER VEHICLE AND RACK ACCESSORIES

Now's the time to visit your favorite Front Runner Dealer in person or online.

IMPORTANT!

FRONT RUNNER RACK KITS OFTEN HAVE A HIGHER LOAD RATING THAN THE VEHICLES THEY ARE MOUNTED TO. PLEASE REFER TO YOUR SPECIFIC VEHICLE MANUFACTURER FOR A RECOMMENDED ROOF RATING. FRONT RUNNER CANNOT BE RESPONSIBLE FOR IMPROPER LOADING BEYOND THE VEHICLE MANUFACTURER'S STATED LOAD CAPACITY.

Be sure to tag us. We love to see our gear in action! #FrontRunnerOutfitters #BornToRoam

Share your adventures on:

© 2020 FRONT RUNNER VEHICLE OUTFITTERS