START HERE!

READ ME FIRST

Don't be a hero and muscle through this installation without reading these fitting instructions first! Improper installation of this gear may void certain aspects of your warranty.

Before you begin, take a moment and open all your Front Runner rack kit boxes and gather the assembly instructions for the various components.

A complete kit will contain:

1. A Front Runner Mounting System specific to your vehicle
2. A Front Runner Rack Tray or Load Bar Slats

This document will guide you through the assembly of the mounting system and assist you in fitting the roof rack tray or load bars to your specific vehicle.

Please refer to the next page for a list of all the components, quantities and tools required.

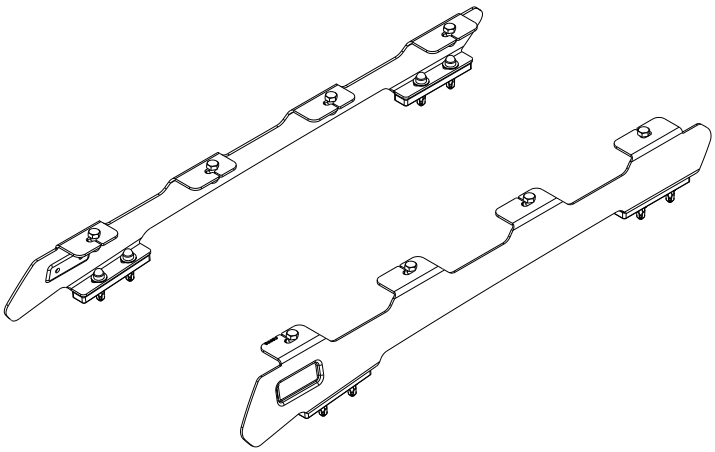

IMPORTANT WARNING! ⚠

IT IS CRITICAL THAT ALL FRONT RUNNER PRODUCTS BE PROPERLY AND SECURELY ASSEMBLED AND ATTACHED TO YOUR VEHICLE. IMPROPER ATTACHMENT COULD RESULT IN AN AUTOMOBILE ACCIDENT, AND COULD CAUSE SERIOUS BODILY INJURY OR DEATH. YOU ARE RESPONSIBLE FOR ASSEMBLING AND SECURING ALL FRONT RUNNER PRODUCTS TO YOUR VEHICLE, CHECKING THE ATTACHMENTS PRIOR TO USE, AND PERIODICALLY INSPECTING THE PRODUCTS FOR ADJUSTMENT, WEAR AND DAMAGE. THEREFORE, YOU MUST READ AND UNDERSTAND ALL OF THE INSTRUCTIONS AND PRECAUTIONS SUPPLIED WITH YOUR FRONT RUNNER PRODUCT PRIOR TO INSTALLATION OR USE. IF YOU DO NOT UNDERSTAND ALL OF THE INSTRUCTIONS AND CAUTIONS, OR IF YOU HAVE NO MECHANICAL EXPERIENCE AND ARE NOT THOROUGHLY FAMILIAR WITH THE INSTALLATION PROCEDURES, YOU SHOULD HAVE THE PRODUCT INSTALLED BY A PROFESSIONAL INSTALLER OR OTHER QUALIFIED PERSONNEL.

NOTE: Front Runner will not be responsible for any damage caused by the failure to install the product according to these instructions.

Please call us if you have any questions about the installation of this product.

 © 2023 FRONT RUNNER VEHICLE OUTFITTERS

1 GET ORGANIZED

IN THE BOX

1	2 X	Rear Foot Rail LH + RH
2	8 X	M8 x 20 Hex Bolt
3	8 X	M8 x 16 x 1.6 Flat Washer
4	8 X	M8 Nyloc Nut
5	8 X	M8 Nut Cap
6	4 X	10mm Spacer
7	8 X	M6 x 19 x 1 Flat Washer
8	8 X	M6 x 35 Hex Bolt
9	8 X	M6 Nut Cap
10	8 X	M6 Jack Nut
11	1 X	Installation Wrench
12	2 X	M6 x 30 Button Head Screw

TOOLS NEEDED

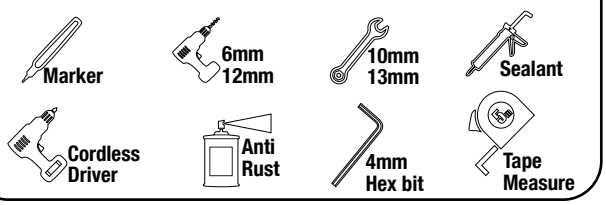

FIGURE 1.1

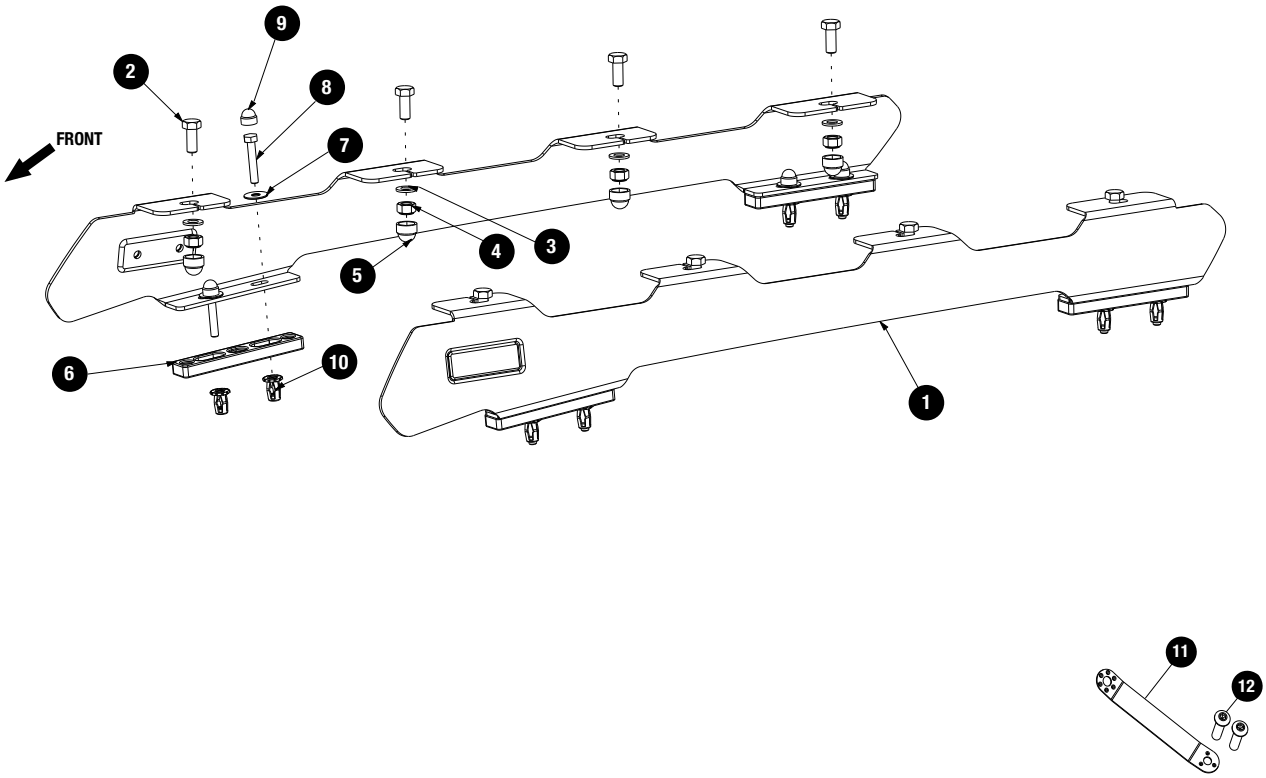

 © 2023 FRONT RUNNER VEHICLE OUTFITTERS

2 FIT AND SECURE

2.1

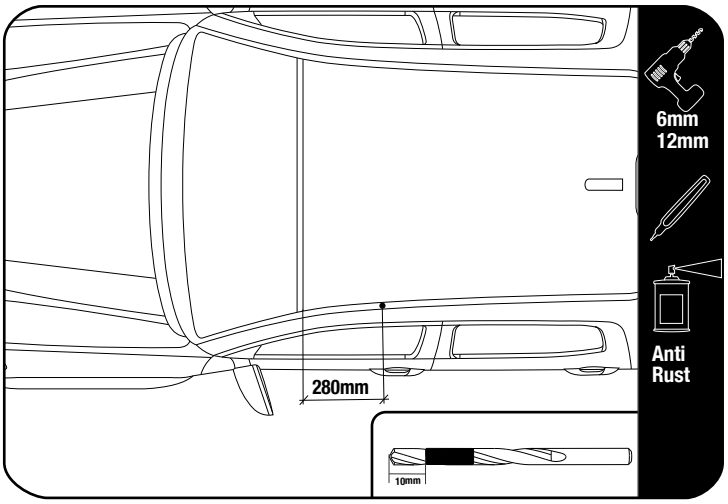

Starting at the top edge of the windscreen measure 280mm along the ditch towards the rear of the vehicle. Mark the hole centre in the ditch as shown.

Place the foot rail on the vehicles roof, lining up the front slot centre with the mark you made and mark the centre of the remaining 3 slots. Do this on both the LH & RH side.

TIP:
Use a drill stop or tape around the drill to mark a depth of 10mm. Some models may have an airbag curtain below.

Drill a 6mm Pilot hole in the center of the markings. Open the holes using a 12mm drill bit.

Apply anti rust to all holes.

2.2

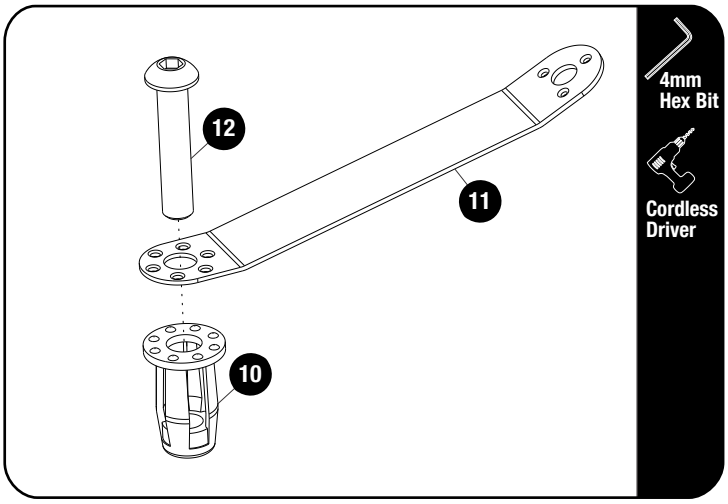

Insert a M6 x 30 Button Head Bolt (Item 12) into the Installation Wrench (Item 11) and loosely fit a Jack Nut (Item 10) to the button head bolt as shown.

Using a cordless driver and a 4mm hex bit, set the jack nut into the hole while holding the Jack Nut Tool, to prevent the Jack Nut from turning.

Make sure the Jack Nut has pulled up all the way to the inside skin of the roof panel.

2.3

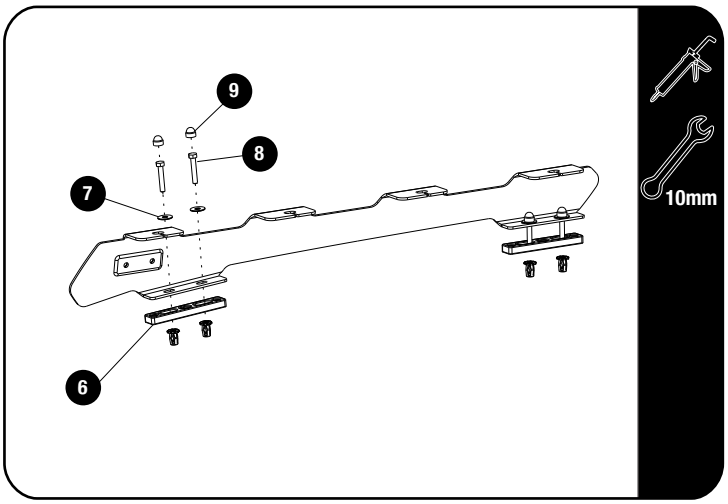

Place silicone over and around the jack nuts to create a watertight seal before placing the spacers over the jack nuts. Place the spacer (Item 6) onto the Jack nut.

Place the Foot Rail onto the spacers.

Use the M6 x 35 Hex Bolt and the M6 x 19 x 1 Flat washer (Item 7 & 8) and fully tighten the M6 x 35 Hex Bolts. Do this on both sides.

Once all the M6 x 35 Hex bolts are tight place the M6 Nut Cap (Item 9) onto the M6 x 35 Hex bolt.

Tightening Torque:

M6 : 8-10Nm / 5.9 ft lb - 7.38 ft lb

© 2023 FRONT RUNNER VEHICLE OUTFITTERS

2 FIT AND SECURE

2.4

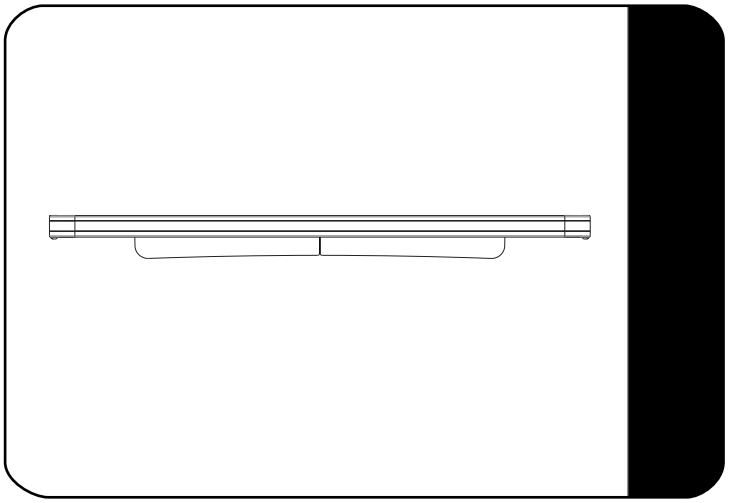

Make sure that the wind deflector is installed before you proceed to the next step.

2.5

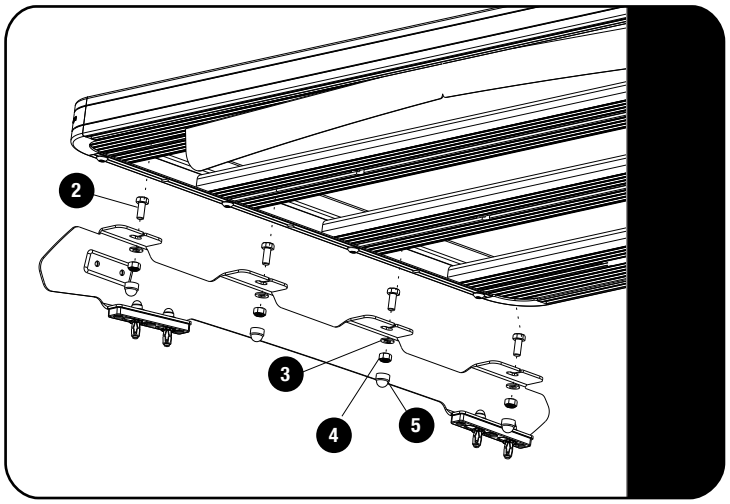

Assemble your roof rack to the Foot Rails using M8x20 hex bolts, M8x16x1.6SS Flat Washers and M8 Nyloc Nuts (Items 2, 3 & 4) as shown.

DO NOT FULLY TIGHTEN.

2.6

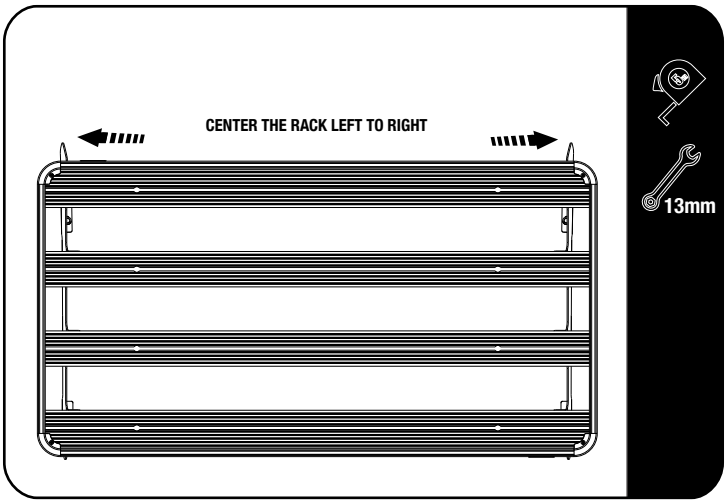

Center the rack left to right using a tape measure. When centered fully tighten the rack to the foot rails starting at one corner and moving to the opposite corner in a criss cross manner. This will keep the rack centered. Fully tighten all remaining bolts.

Finish off by placing the M8 nut caps (Item 5) over all the nuts.

Tightening Torque:

M8 : 15-20Nm / 11.06 ft lb - 14.75 ft lb

© 2023 FRONT RUNNER VEHICLE OUTFITTERS

3 INSTALL OTHER VEHICLE AND RACK ACCESSORIES

Now's the time to visit your favorite Front Runner dealer in person or online.

IMPORTANT! ⚠

FRONT RUNNER RACK KITS OFTEN HAVE A HIGHER LOAD RATING THAN THE VEHICLES THEY ARE MOUNTED TO. PLEASE REFER TO YOUR SPECIFIC VEHICLE MANUFACTURER FOR A RECOMMENDED ROOF RATING. FRONT RUNNER CANNOT BE RESPONSIBLE FOR IMPROPER LOADING BEYOND THE VEHICLE MANUFACTURER'S STATED LOAD CAPACITY.

Be sure to tag us. We love to see our gear in action! #FrontRunnerOutfitters #BornToRoam

Share your adventures on:

© 2023 FRONT RUNNER VEHICLE OUTFITTERS