Power Pack DC40

Dual Battery System & Solar Charger

OWNERS MANUAL

Index

Introduction	3
Safety Information	3
Features	4
Wiring Diagram	5
Preparing for Installation	6
Changing Battery Type	7
Installing Battery	8
Connecting Solar Panels	9
Connecting DC power sources	9
Connecting External Battery Chargers	10
Ignition Over-ride	10
System Operation	11
Remote Monitor	12
Remote Monitor Status Messages	14
Specifications	15
Warranty	17

Introduction

The **National Luna Power Pack DC40** blends the convenience of a portable battery system and the performance of a DC-DC battery charger with MPPT solar regulator.

This combination results in a self-contained split-charge system that is at-home in the vehicle or in camp and can be used to power fridges, lights, pumps and other 12V appliances.
The Power Pack DC40 can be charged from a vehicle alternator, solar panels or external chargers making it versatile for a variety of applications.

The Power Pack DC40 supports 12V lead-acid (wet, calcium, Gel, AGM) as well as lithium batteries.

Two dual-port USB modules with fast charge allows several smart devices such as smart-phones, tablets, GPS, cameras and other USB-devices to be powered up to 18W on each port.

Heavy-duty connectors can be used for connecting a variety of accessories from inverters (600W max) to fridges and other small appliances. These connectors can also be used with external battery chargers as an alternative to the built-in dedicated charge port.

The primary charge input supports 12V and 24V vehicle systems and will provide up to 40A of current to the auxiliary battery using an optimized 6-stage charge algorithm.

A built-in 40A MPPT solar regulator circuit supports solar panels up to 42V and provides up to 40A (600W) charge current to the battery.

Supported battery types *(set to AGM by default)* :
- Lead-acid (Calcium, Flooded, AGM, Gel, VRLA)
- Lithium-ion, LiFePO4

Temperature Compensation & battery protection :
- The battery charge profile takes into account battery temperature with a sensor (located inside the battery compartment) for safe charging under various conditions.

Max battery size :
- 330mm x 180mm x 280mm (L x W x H)

SAFETY INFORMATION :

- Before installation, read the instructions carefully.
- Disconnect any existing batteries.
- The Power Pack DC40 is used for charging 12V lead-acid and automotive Lithium batteries only.
- Do not use for any purpose other than indicated in this manual.
- Do not attempt to charge a non-rechargeable or battery other than 12V.
- Never attempt to charge a damaged or leaking battery.
- Avoid open flames in the vicinity of the battery.
- Do not alter or modify the Power Pack DC40 under any circumstances.
- Unauthorized disassembly, repairs or modifications will void any warranty.
- Attempts to use the Power Pack DC40 for purposes other than indicated in this manual will void the warranty.
- Ensure all connections are secure and cables are installed in a safe manner.
- Use the correct cabling size and fuses in accordance with the installation instructions.
- Install the supplied in-line fuse as indicated in the installation instructions.
- Ensure the Power Pack DC40 is secured in mobile applications.

Features

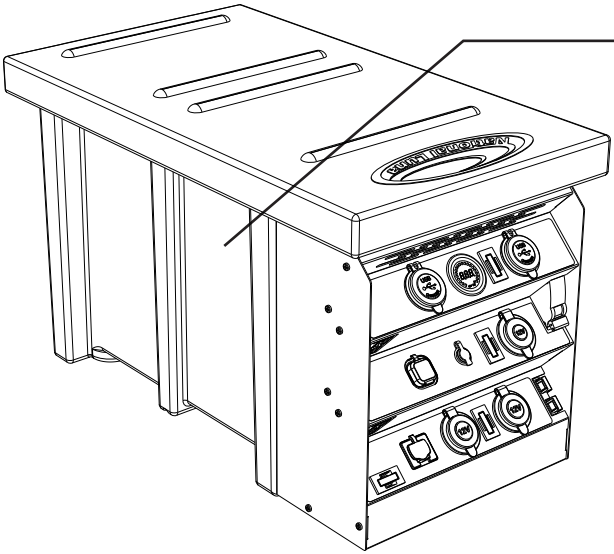
Battery Compartment
Sliding Lid
Control Panel

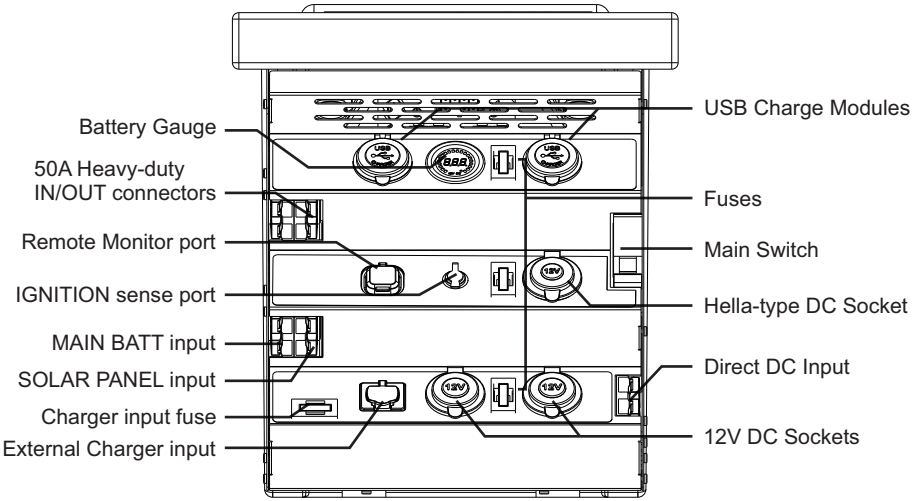
Battery Gauge
50A Heavy-duty
IN/OUT connectors
Remote Monitor port
IGNITION sense port
MAIN BATT input
SOLAR PANEL input
Charger input fuse
External Charger input
USB Charge Modules
Fuses
Main Switch
Hella-type DC Socket
Direct DC Input
12V DC Sockets

Wiring diagram - Typical Installation

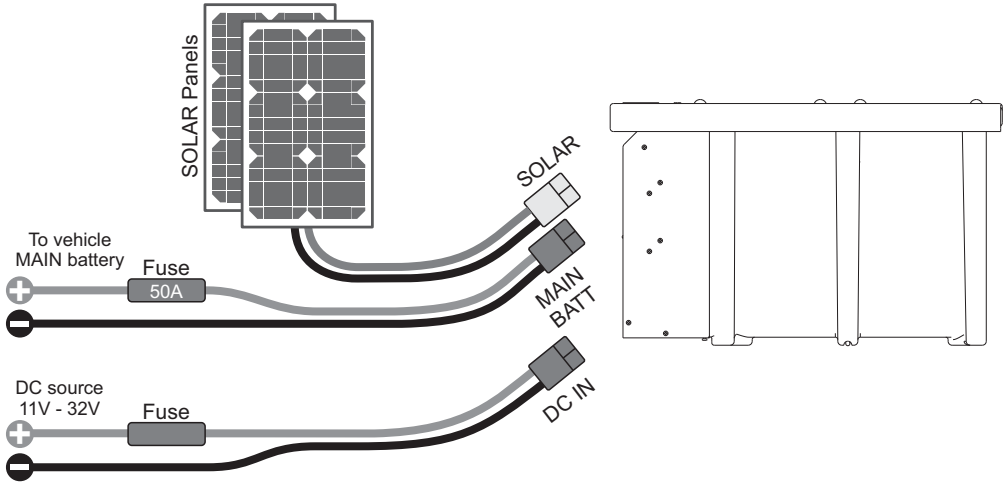

NOTICE - Importance of correct cable type and connection quality.

The Power Pack DC40 input current can be expected to reach 50A under normal conditions.
Special care must be taken to ensure that the cable, connectors and power source are rated for this current.

Poor connections result in high voltage loss, lowering system performance.
Follow these guidelines during installation :

- A cable thickness of 16mm^2 (5 AWG) is recommended.
- Ensure all cable terminals are crimped with appropriate tools.
- Use the correct size of terminal and ensure they are clean and free of corrosion.
- Always use the supplied fuses or replace with the same type and value of fuse.
- If more than one system is installed, avoid the use of shared cabling.

Preparing for Installation

For applications where the Power Pack DC40 is installed in a vehicle, locate the Power Pack such that the input cables are not restricted or under strain. The Power Pack should also be secured to prevent movement.

Use 16mm^2 cables for the input from the vehicle main battery and install the supplied 50A in-line fuse close to the main battery on the positive cable (*Fig 1).*
Make sure all connections are secure and terminated correctly with appropriate tools.

The input cables must be terminated with a RED 50A coupler matching the input on the Power Pack DC40 marked "MAIN BATT".

Before installing a battery into the Power Pack DC40, select the correct battery type.
(Instructions on page 7)

Once the battery type is selected, a battery can be installed into the Power Pack DC40 and the RED input cable connected *(Fig 2)*.

If a standard solar panel is used, it can be connected to the input marked "SOLAR PANEL".

Fig 1

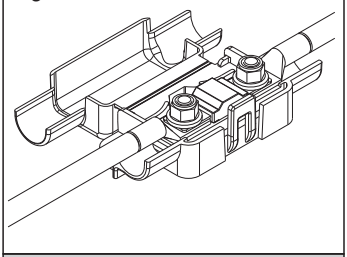

Install the fuse on the positive cable close to the main battery.
Ensure terminals are crimped securely.

Fig 2

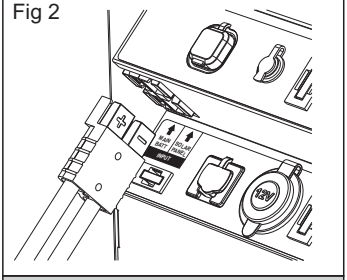

Connect the supply from the main battery (alternator) to the RED input on the Power Pack DC40.

Changing battery type

The battery type should be chosen before the auxiliary battery is installed.
This is best done before the battery is inserted into the Power Pack DC40.
For safety, the battery type cannot be changed if the auxiliary battery is already connected.

A power source can be connected to the MAIN BATT, SOLAR PANEL or DC INPUT to power the system and change the battery type.

1

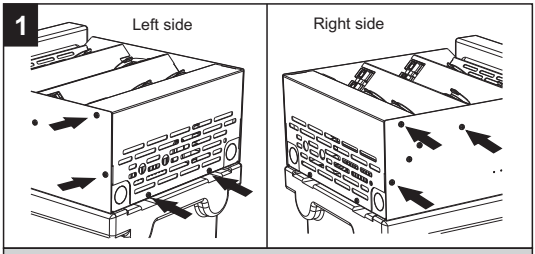

Remove screws from the left, right and bottom as indicated.
The cover can now hinge open.

2

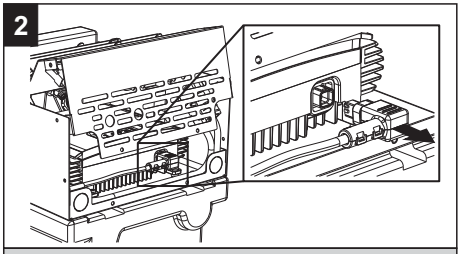

With the cover slightly open, unplug the remote monitor cable.
The cover can now be opened fully to expose the internal DC-DC system.

3

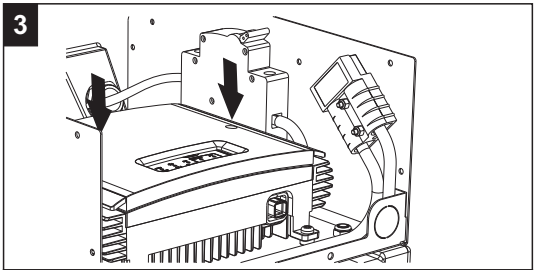

Remove the cover of the internal DC-DC system by loosening two screws on top.

4

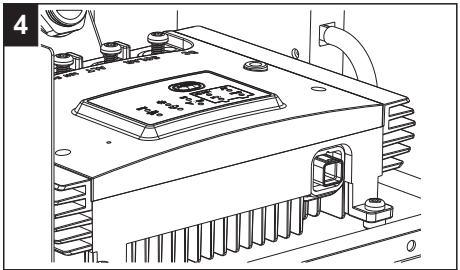

Connect power to the MAIN BATT or SOLAR input.
The DC-DC system will now activate and show the current battery selection.

5

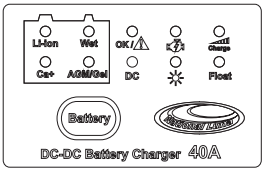

The AGM battery type is the default factory setting.

To change this, press the "Battery" button until the desired type is highlighted.

6 Once the preferred battery type is selected, disconnect the power source.

- Replace the cover of the DC-DC system.
- Re-connect the remote monitor plug and close the cover.
- Re-install the screws that were removed earlier.
- The auxiliary battery can now be installed.

Battery Types	
Li-ion	Used for automotive Lithium-ion or LiFePO4 batteries.
Wet	Used for regular automotive starting and flooded high-cycle batteries.
Ca+	Used for flooded deep-cycle, calcium and maintenance-free batteries.
AGM / Gel	Used for all types of AGM and Gel batteries.

Installing Battery

To hold a battery securely in the Power Pack, install the U-bolt and hold-down bracket.
It is best to lay the Power Pack on its side or end to do this.

Note : Select the battery type before installing the auxiliary battery. *See page 7.*

1

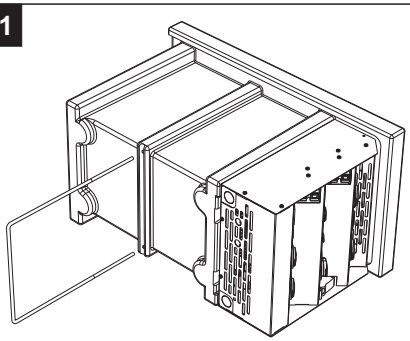

Insert the U-bolt through the holes drilled into the bottom of the Power Pack.

Return the Power Pack to the upright position.

2

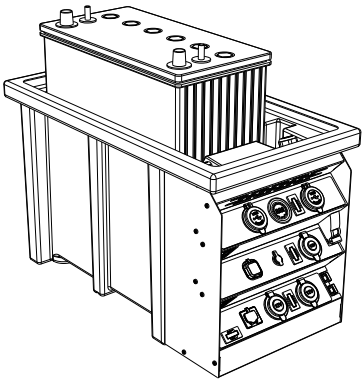

Remove the Power Pack sliding lid and insert the auxiliary battery into the battery compartment.

3

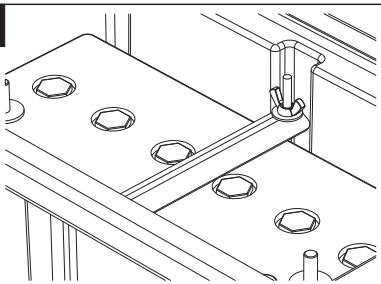

Attach the hold-down bracket, washers and wing-nuts.

Take care not to over-tighten the screws.

Connect the positive (RED) and negative (BLACK) cables to the battery terminals.
Make sure the connections are clean and tight

Connecting Solar Panels

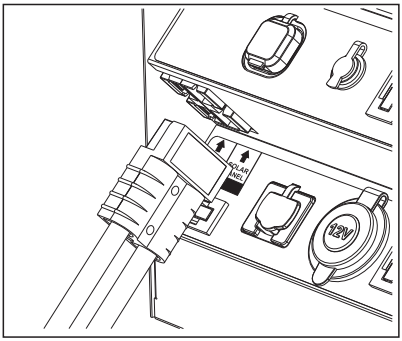

The Power Pack supports the direct connection of solar panels up to 42V through the heavy-duty connector marked "SOLAR PANEL".

Note that if the solar panels have internal or in-line regulators, connect them to one of the AUXILIARY IN/OUT connectors instead.

Connecting additional DC power sources

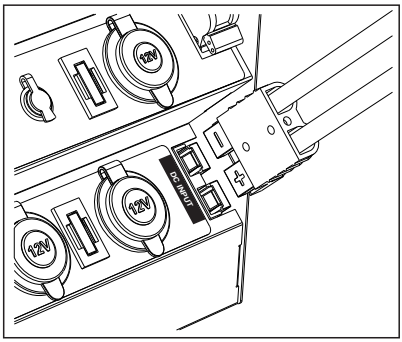

The DC input on the Power Pack DC40 is designed as an alternative input that can be used with DC power sources such as AC-DC power supplies, wind turbines, hydro-electric and generators with DC output.

To utilise the full 40A output capability of the Power Pack DC40, the DC source should have a rating of 600W or more with a voltage between 11V and 32V.

** Do not connect battery chargers to this input.*

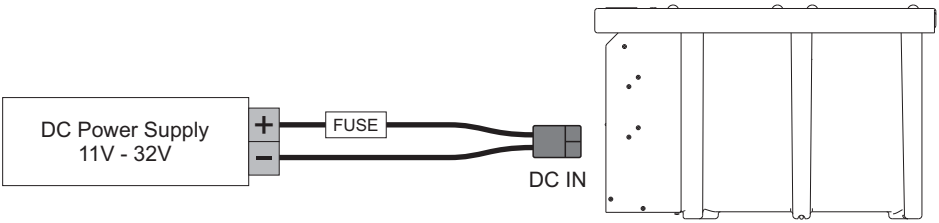

Fuses for DC power sources

When using an external DC power source, install a fuse close to the power source on the positive cable. The fuse current rating should be more than the maximum expected source current but not more than 50A.

Connecting external Battery Chargers

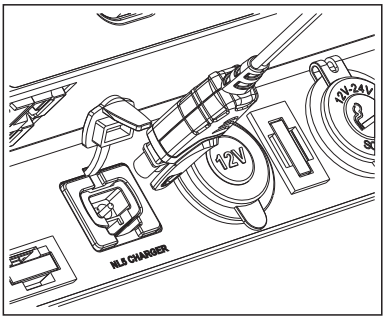

The Power Pack has a charge port specifically for use with National Luna Intelligent Battery Chargers.

Insert the charger quick-connector into the charge port labeled "NL5 CHARGER" until it clicks securely.

In order to connect other brands of chargers to this input, a quick-connector cable is available separately.
This port can support up to 10A charge current.

Make sure the main breaker switch is in the ON position during charge.

High-current Chargers and Inverters

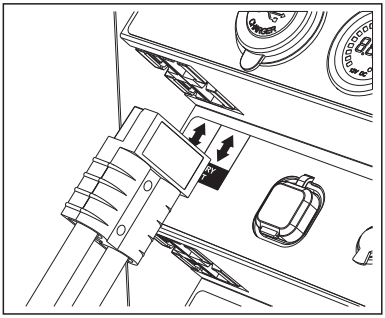

In order to use higher-power battery chargers with currents greater than 10A or other brands of chargers, it is recommended to connect to one of the AUXILIARY IN/OUT plugs. These plugs have a 50A continuous rating.

AC Inverters can be connected to the AUXILIARY IN/OUT plugs for powers up to 600W.
Larger-power inverters should be connected directly to the battery terminals.

When using chargers or inverters connected to the AUXILIARY IN/OUT plugs, the main switch must be ON.

Ignition over-ride (optional accessory)

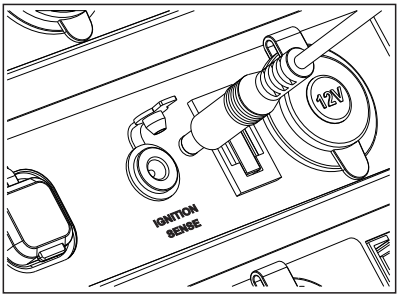

The IGNITION SENSE port allows the Power Pack to support vehicles where the charge voltage drops very low or is very erratic.
This may be the case in some vehicles with "Smart Alternators".

Plug the small end of the over-ride cable into the IGNITION SENSE port.

Plug the larger end into a socket that provides a positive voltage only when the ignition of the vehicle is ON.

CAUTION

Connecting the IGNITION over-ride to a permanent 12V source may result in excessive discharge of the MAIN battery.
Only use the IGNITION SENSE feature if the vehicle alternator voltage is below 13.2V under normal conditions.

System operation

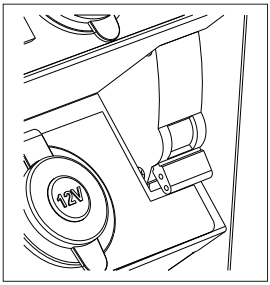

Main Isolator Switch

In order to charge or supply power to accessories connected to any of the plugs & sockets, the main switch on the Power Pack DC40 must be in the ON position.

If the Power Pack DC40 is not in use then it is best to turn this switch OFF. This will completely isolate the auxiliary battery.

The Power Pack DC40 will start to charge the auxiliary battery once voltage on the MAIN BATT input exceeds 13.2V or a valid voltage is provided on the SOLAR or DC inputs.
It will stop charge once voltage drops below 12.6V after a short delay.

If the IGNITION SENSE input is used, the Power Pack DC40 will charge with input voltage above 12.0V and stop when voltage drops below 11.5V. (MAIN BATT input)

If a solar panel is connected and exposed to sunlight, the Power Pack DC40 will charge with the maximum power possible from the panel under the present conditions. Voltage from the panel must be between 9V and 42V.

Multiple charge input sources can be connected simultaneously. The Power Pack DC40 will give priority to the MAIN BATT source first then SOLAR and then DC input. Switching between these sources will be automatic.

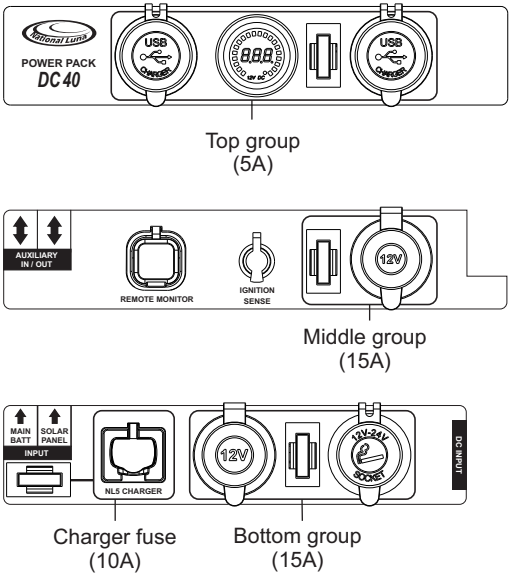

Fuses

Each of the modules and sockets are grouped with a fuse for safety.
The groups are surrounded by a line on each of the levels of the control panel.

If any of the fuses need replacement, be sure to replace it with the correct value :

Top group	:	5A
Middle group	:	15A
Bottom group	:	15A
Charger fuse	:	10A

Remote Monitor - (Optional accessory)

The Remote Monitor can be plugged into the Power Pack DC40 and provides status about the system on a high-contrast LCD screen.

Information such as Main and Auxiliary battery voltages, charge mode, charge current, battery type, battery temperature and error conditions are displayed in a choice of 3 user-selectable display modes.

In addition to the selectable screen modes, the user is able to increase or decrease the screen brightness and choose to turn the display on or off.

The screen will turn off automatically when the system is idle. It will turn on automatically when the next charge cycle starts.

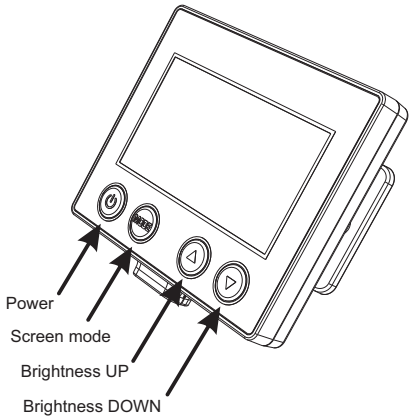

Connecting the Remote Monitor

Lift the dirt cover on the Remote Monitor port.

Connect the square end of the supplied data cable to the Power Pack remote port as indicated *(fig 1)*.
It can fit in one direction only.

Press the plug until it clicks securely.

Connect the flat end of the data cable to the Remote Monitor. *(fig 2).*
This connector can fit both ways.

Locate the Remote Monitor in a convenient location using the supplied mounting fixture.

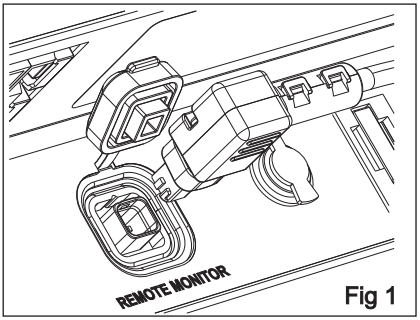

Fig 1

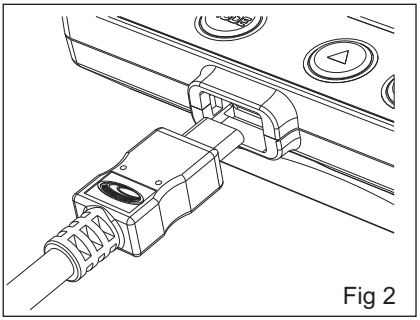
Fig 2

Remote monitor operation

The remote monitor can be turned ON or OFF by pressing the **POWER** button.
The display will turn off automatically after a short delay if there is no active charge cycle.
The display brightness can be increased or decreased by pressing the **UP** or **DOWN** buttons.

The remote monitor has 3 display modes that represent the status of the charging system in different ways.
Press the **MODE** button to cycle through the different display options.

Display mode 1 - This mode focuses on the auxiliary battery with the majority of the screen used to show the auxiliary battery voltage and battery temperature.

The input source (ALT, SOLAR or DC) as well as charge current is displayed during a charge cycle.

If SOLAR or DC is the active charge source, the displayed voltage represents the voltage of that source.
If there are no active charge cycles, “STBY” is displayed.

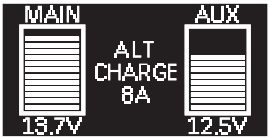

Display mode 2 - In this mode, the status of the main and auxiliary batteries are represented as graphical bar-graphs.
The actual voltages are shown for the respective batteries.

During a charge cycle, the input source (ALT, SOLAR or DC) is displayed with the actual charge current.
If there is no active charge cycle, “STANDBY” is displayed.

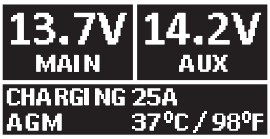

Display mode 3 - This mode shows voltages of the respective main and auxiliary batteries as well as charger mode, charge current, battery type and battery temperature.

If there are no active charge cycles, “STBY” is displayed.

Remote monitor STATUS messages

The remote monitor will show the charge status during an active charge cycle.

During the normal bulk and absorption charge stage, the charge current will be shown as well as the input source.
During the Analysis stage, “TEST” will be shown. This stage helps to detect a defective battery.
During the Float stage, “FLOAT” is shown.

Warning Messages

The remote monitor will respond and indicate various error conditions that may occur under normal operation. These warnings should be investigated to prevent damage to the batteries or the Power Pack.

The following symbols or messages may appear on any of the 3 display modes :

⚠	LOW BATTERY or NO BATTERY - This symbol is displayed when either the Main or Auxiliary battery voltage is lower than 11.4V or there is no connection to one of the batteries. Check fuses and connections to both batteries. Ensure the main switch is ON when in use. **If this symbol and voltage display are flashing, the battery is not holding charge and should be tested.**
OVP -	OVER VOLTAGE PROTECTION - The voltage applied to the SOLAR or ALT inputs is too high. Ensure the applied voltages are within specification. *Refer to specifications on page 15*.
OTP -	OVER TEMPERATURE PROTECTION - The detected auxiliary battery temperature is above 60°C. Charging is stopped to prevent damage to the battery. This error will also be displayed if the Power Pack internal circuit temperature is above 115°C. Charge will stop until the system temperature recovers to a safe level.
OCP -	OVER CURRENT PROTECTION - The detected charge current is higher than specification. Inspect the installation for cable faults or short-circuits.
REV -	REVERSE POLARITY - The connections to the auxiliary battery have been reversed. Check the battery connections.
BAD -	BAD BATTERY - The Power Pack has detected that the AUX battery is not able to be charged safely. Test the battery and replace if necessary.
Please check cable	The plug to the remote monitor may not be inserted correctly. Ensure it is fully inserted.

Specifications

Input Voltage Range		
MAIN BATT / DC inputs	11V - 32V	
SOLAR PANEL Input	9V - 42V	
Input priority	MAIN - SOLAR - DC	
Solar Regulator		
Type	MPPT	
Rated Current	40A	
Rated Power	600W	
DC Input		
Voltage range	11V - 32V	
Turn OFF	< 11V	
Over- Voltage	32V	
12V Alternator Input		
Turn ON	13.2V	
Turn OFF	12.6V	
Over-Voltage	14.8V - 16V	
24V Alternator Input		
Turn ON	26.4V	
Turn OFF	23.2V	
Over-Voltage	29.6V - 31V	
Ignition Over-ride (12V / 24V)		
Turn ON	12.0V	24V
Turn OFF	11.5V	23V
Over-Voltage	15.5V - 16V	31V - 32V
Output		
Voltage	3V -14.8V	
Current	40A	
Power	600W	
Operating Temperature	-20°C to 85°C	
Standby Current (switch ON)	<50mA	
Battery Gauge display range	10.7V - 14.7V	
USB charge output (each port)	5V-3A, 9V-2A, 12V-1.5A	
Dimensions	498mm x 280mm x 306mm	
Remote Display	Optional	

Battery Types	Bulk Voltage	Float Voltage
AGM / Gel	14.4V	13.6V
Standard Wet	14.6V	13.6V
Calcium	14.8V	13.6V
Lithium Ion / LiFePO4	14.4V	13.6V

Battery Temperature Compensation	
High temperature	-17mV per °C above 30°C
Low temperature	+17mV per °C below 21°C
Battery temperature protection	60°C
Device Protection	
Reverse Polarity	
Over Voltage	
Over Current	
Over Temperature	
Bad Battery Detect	

Charge Algorithm

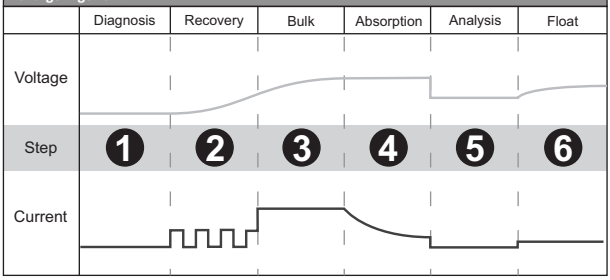

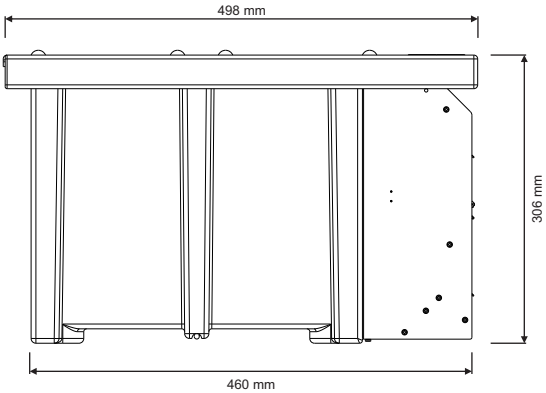

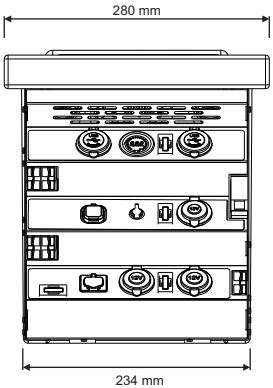

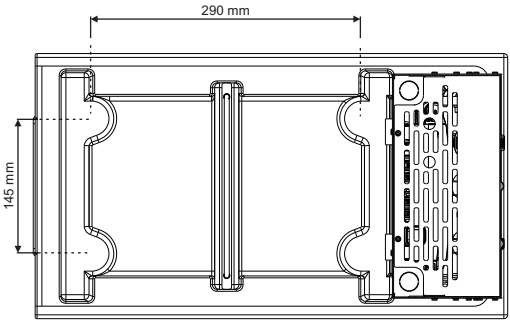

Maximum Battery Size

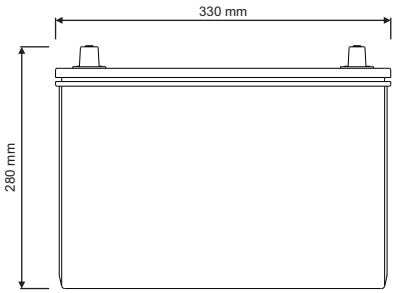

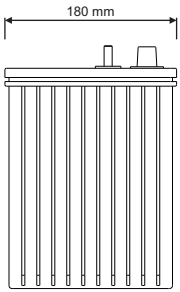

National Luna Limited Warranty - South Africa Only

This National Luna Warranty supersedes any other advertised Guarantee or Warranty provided with this appliance by any wholesaler or retailer.

National Luna warrants this product to be free from defects in materials and / or workmanship under normal use and service to the original purchaser subject to the following :

1. At any time within THREE YEARS from the date of purchase by the original purchaser, National Luna will at its discretion replace or repair without cost to the owner, through an authorised service agent, any part found to be defective by National Luna.

2. Where parts are replaced by an authorised service agent, the labour costs for the work done will be for the owner's account.

3. This warranty does not apply to accessories or items where the length of life depends on the amount of use and care given.

4. This warranty is valid in South Africa only.

5. National Luna may consider a warranty void if modifications have been made to this product which may cause undesirable or hazardous operation or may be the cause of the malfunction of this product.

6. National Luna shall not be responsible for any damages of any kind resulting from incorrect voltages or faults with regards to power supply which fall outside of the appliance operating specifications.

7. National Luna shall not be responsible for damage to the product caused by negligent use, storage of hazardous chemicals, use of corrosive substances, fire, flood, civil-disturbances, lightning or any other natural phenomenon.

8. Warranty returns to the factory for repairs - in the event where the unit has been shipped to the factory for repairs, transport costs will be for the owners account.

9. National Luna will not accept any responsibility for the consequential loss or damage caused by, or due to the malfunctioning of this appliance.

10. National Luna shall not be held responsible for any injuries to persons caused by the incorrect or negligent usage of this appliance.

11. Repair work to be done in terms of this warranty must be referred to National Luna for written authorisation before any work is performed.

12. National Luna reserves the right to refuse repair or service under warranty if the original proof of purchase cannot be produced.

13. Removal of serial numbers may render the warranty void.

National Luna Limited Warranty - International

The standard National Luna Warranty in South Africa cannot be applied outside the South African borders for practical reasons.

1. National Luna has a world wide distributor network. These distributors import products and carry the warranty (at their cost) in line with the various countries' conditions of sale.

2. Cross-border customs and duties apply. A National Luna manufactured product that is returned to the factory in South Africa will have the South African warranty applied. However, all transport costs incurred will be for the purchaser's account.

3. It is important to note that a private purchase of this product in South Africa and exported will not carry a warranty. Any labour and parts required for repairs would incur costs in foreign currency and be for the owner's account.

4. In the event of a National Luna product being fitted as standard equipment in caravans and trailers and subsequently being exported from South Africa, the warranty must be carried by the persons responsible for the importing into a country other than South Africa.

5. It is recommended that National Luna products be purchased from the authorised importer in a particular country who carries the applicable warranty and back-up service.

Replaceable Modules

The Power Pack DC40 is designed to allow some of the plugs & sockets to be replaced with other compatible modules within the 29mm range.

The lower group can accommodate the following 29mm modules :

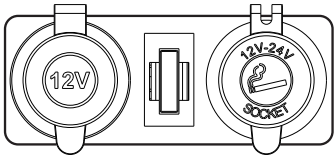

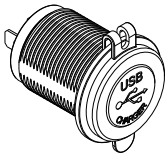

Dual USB charger

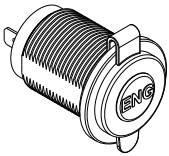

Screw-in DC socket
(Engel plug compatible)

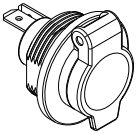

Hella-type socket

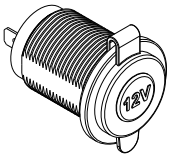

12V DC socket
(factory fitted)

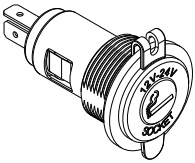

Cigarette-lighter socket
(factory fitted)

CAUTION

Replacing modules requires that the Power Pack DC40 cover be removed and the wiring be manipulated.
This should only be done by qualified persons.

Optional Accessories

Remote Monitor

6m cable for
Remote Monitor

NL5 Intelligent Battery Charger

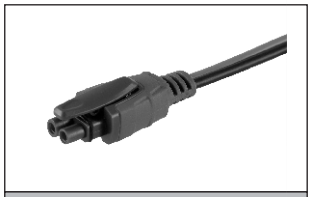

Charge Port adapter cable (1m)

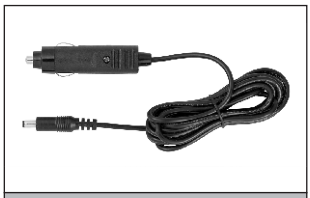

Ignition Sense cable

National Luna sales and support :

www.nationalluna.com

Patents & Design registrations

South Africa : 2018/06290 ; F2017/01515 ; F2017/01516
Australia : 2018232986 ; 201811491 ; 201811492

BMS-20331 AUG 2021