12V SPLIT CHARGER SYSTEM

DIY INSTALLATION KIT

INSTRUCTION MANUAL

CONTENTS

What's in the kit?..... 2
About Split-Charge systems..... 3
Glossary of terms..... 3
Before installation..... 4
Safety considerations 4
Wiring diagram..... 5
Basic installation..... 5
Fitting the Dual Battery Controller..... 6
Basic system operation - How it works..... 6
Operating the Dual Battery Controller..... 7
Typical monitor readings..... 8
Battery basics - A simple guide..... 9
Extended Split-Charge configurations.....10
Technical system operation.....13
Cable / Wiring.....14

What's in the kit?

You should have the following parts included in this kit :

1 x Intelligent solenoid (Isolator unit)
1 x Dual battery controller (Monitor)
2 x 100 Amp fuses
1 x 3.5 meter data cable
6 meters RED 16mm^2 power cable
6 meters BLACK 16mm^2 power cable
Positive battery terminals
Negative battery terminals
2 x In-Line power fuse holders
1 x 15 Amp accessory fuse
Assorted terminals and fasteners
Assorted cable ties

Note - Not all components are required for a full installation.
Accomodation has been made for variances in battery types and vehicle makes.

Although the supplied 16mm^2 power cable is double-insulated, protective cable sleeving is recommended for all installations (not supplied in this kit).

Split Charging Systems

THERE ARE A NUMBER OF SPLIT CHARGING SYSTEMS BEING OFFERED TO THE 4X4 INDUSTRY.

1. Manual battery change-over switch - this requires the driver of the vehicle to switch from the main battery to the auxiliary battery or vice versa. However, the disadvantage of this system is that you disconnect a battery from the alternator and it may never get a full charge (causing permanent damage to the battery).

2. Relay type systems - these typically use a small automotive relay which is not capable of handling the continuous current required to charge the auxiliary battery. These systems also tend to work off the ignition which connects both batteries immediately when the car is started. Normally these are activated by the ignition. (ie. The sensing wire has to be connected into the vehicle's electrical system).

3. Time delay systems - these are now recognized by most 4x4 specialists as a better methodology whereby the main battery gets a full charge for approximately 5 minutes before connecting both batteries in parallel. The time delay function has been introduced to protect the vehicle's alternator, as well as enabling the main battery to recover lost charge before introducing the auxiliary battery

NATIONAL LUNA has in it's experience and discussions with leading world-wide 4x4 specialists, developed a fully comprehensive split charging system, which caters for all conditions of battery charging.

This system has been specifically designed not to interfere with the motor vehicle's electrical system.

Glossary of Terms

- **WIRING LOSS -** This refers to voltage loss in an electrical conductor (e.g. from the alternator to the battery, when a thin wire is connected). The voltage loss is of such magnitude so as to create an artificially low voltage on the battery under charge. This causes a slower charge rate to the battery. In some cases a battery may take up to three times longer to charge as a result of thin wiring.
- **VOLTS (V) -** In the off-road market, the available power source is normally a 12 volt DC (direct current) main car battery and an additional auxiliary battery.
- **AMPS (A) -** Current flow is measured in Amps (i.e. consumption by the electrical device).

- **AMBIENT TEMPERATURE** - This is the prevailing temperature of the air surrounding the battery.
- **HIGH CYCLE BATTERY** - High cold cranking Amp "CCA" - normally accepts fast charging time, should not be deep discharged. (50% of discharge).
- **DEEP CYCLE BATTERY** - Typically can be discharged completely (80% of discharge) - but takes a long time for recharging.
- **LED - LIGHT EMITTING DIODE** - Electronic component used to indicate and "light up".

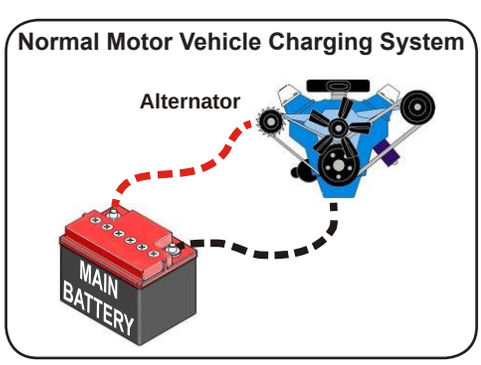

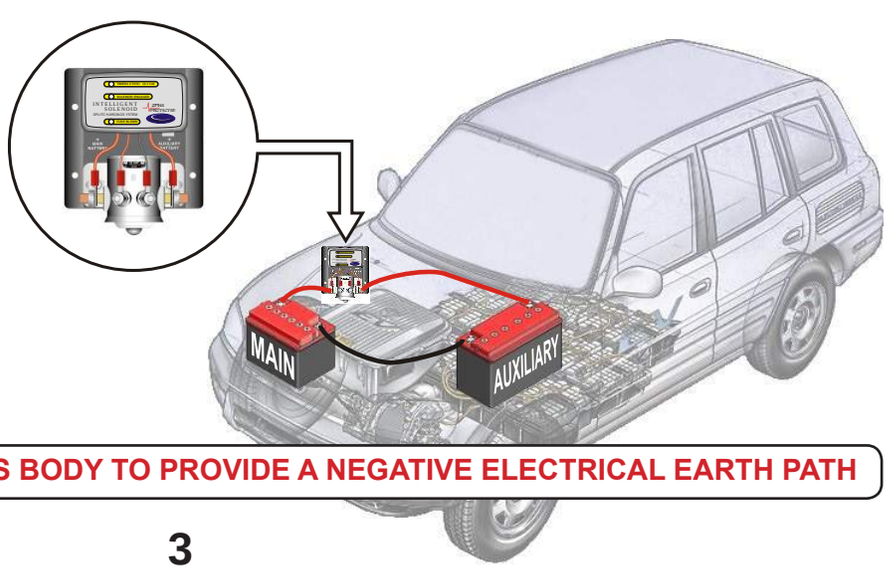

DO NOT RELY ON THE VEHICLE'S BODY TO PROVIDE A NEGATIVE ELECTRICAL EARTH PATH

Before Installation

Before installation of your split-charge system, make sure that your vehicle's electrical system is compatible:

Installing a secondary battery in your vehicle increases the work load on your vehicle's alternator.
It is important to check that your alternator can maintain sufficient voltage to charge the batteries with the additional load.

Testing your alternator

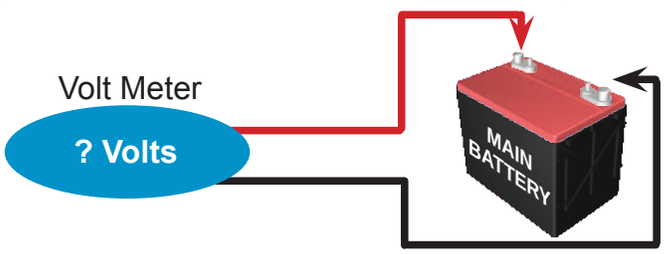

With the engine running, measure the voltage across the terminals of your main battery using a voltmeter. **The voltage should be above 13.7 volts.** Turn on the vehicle lights, air-conditioner and any other load (such as spot-lights). Measure the voltage on the battery again. If the voltage has dropped below 13.5 volts then it is recommended that the alternator performance be checked.

The alternator regulator or power output may have to be upgraded by an auto-electrical technician.
A regulated voltage above 14.0 volts under load is preferable for optimal auxiliary battery charging.

Safety Considerations

Before commencing with the installation, the **NEGATIVE TERMINAL** of the main vehicle battery should be disconnected as a safety precaution. Only re-connect the negative terminal after the rest of the installation is complete and checked. On some vehicles, removing any terminal of the main battery may affect alarms and engine management systems.

(Refer to your vehicle's handbook relating to battery connections).

In this case, the installation can be performed "live" - **EXTREME CAUTION** is advised when connecting and handling wiring.

Battery cables between the two batteries must be securely tied down to the vehicle to prevent damage.
Care must be taken that the battery cables are kept well clear of any moving parts or excessively hot areas of the vehicle that may damage them. The 16mm^2 power cable supplied with the kit has a double insulation for extra protection.

Do not secure the cables underneath the vehicle in such a way that they may be vulnerable under severe off-road conditions. If a cable is to be tied down to the chassis, ensure that there is enough play on the cable to withstand full suspension movement. (It is often best to follow existing brake-lines and wiring along the chassis). All batteries must be secured to the vehicle (preferably mounted in a suitable battery bracket).

It is recommended to install fuses (labeled "FUSE 1" & "FUSE 2") in the main current path. (See page 5, 10,11,12). These fuses should be rated at the maximum expected current during normal operation (between 50A and 125A). If an unexpected overload occurs, these fuses will isolate both batteries from the source of the fault.

WARNING !

The Split-Charge Kit has been designed not to interfere with the motor-vehicle's electrical system.

There is a tendency to use the vehicle's chassis as an electrical earth path. It is convenient to adopt this attitude as it is sometimes awkward to route a heavy-duty cable over the length of a vehicle.

This is not recommended

In the event of a poor earth connection, the current flow will find a path through the motor vehicle's standard wiring. This wiring is not suitable for typical battery charging currents and may result in *BURNING* or *PERMANENT DAMAGE* to other electrical equipment.

Use the supplied BLACK cable to connect the MAIN and AUXILIARY negative terminals.

Double-check all connections and crimping!

Poor connections will affect the performance of the system!

WIRING DIAGRAM

(16mm^2 power cable)

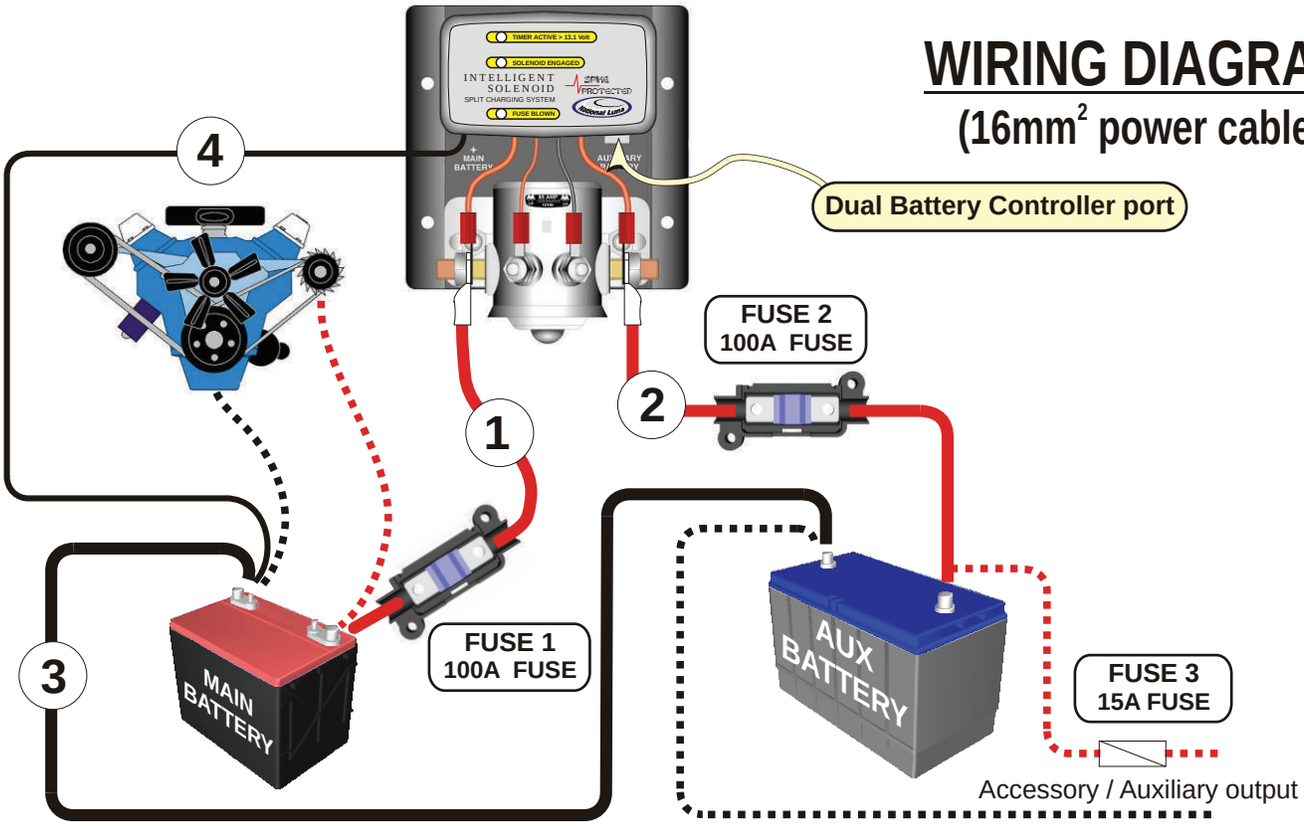

Basic Installation

UP

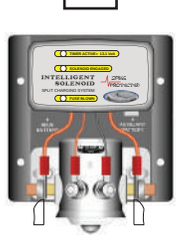

STEP 1

The electronics of the Intelligent Solenoid are not waterproof. It is important to mount the Solenoid in an upright position to prevent moisture build-up caused by pressure washing the engine compartment.

In cases where it is not practical to mount the unit upright, the unit can be mounted in a horizontal position (provided it is installed away from all sources of water contamination).

STEP 2

Install the 100A fuse (fuse 1) provided as close to the main battery as possible. Using the **RED** cable and lugs supplied, make a connection between the positive terminal of the main battery to one of the terminals of the fuse holder. Connect the free terminal of the fuse holder to the terminal marked “MAIN BATTERY” on the Intelligent Solenoid unit using a short piece of the **RED** cable and the lugs supplied.

Connect the remaining **RED** cable to the terminal marked “AUXILIARY BATTERY” using the lugs supplied.

Connect to fuse 2 and then to the positive terminal of the auxiliary battery.

STEP 3

Connect the BLACK cable from the negative terminal of the main battery to the negative terminal of the auxiliary battery. **(DO NOT USE THE VEHICLE CHASSIS AS AN ELECTRICAL EARTH PATH!)**

STEP 4 (NB - THIS MUST BE THE LAST CONNECTION MADE)

Connect the BLACK earth wire from the Intelligent Solenoid to the negative terminal of the main battery.

The circuit will now be powered and will result in the **Green Light** (ie. TIMER ACTIVE > 13.1 Volt) on the unit flashing once.

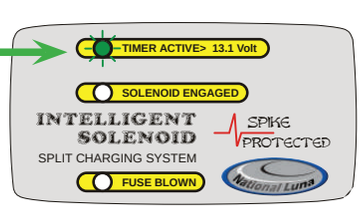

If the GREEN light does not flash once only, remove the connection and reconnect. (RESET)

Fitting the Dual Battery Controller

Once the Intelligent Solenoid is installed, the Dual Battery Controller/Monitor can be connected. Route the 3.5m monitor cable (supplied) from the Intelligent Solenoid unit to the location where the Dual Controller will be mounted.

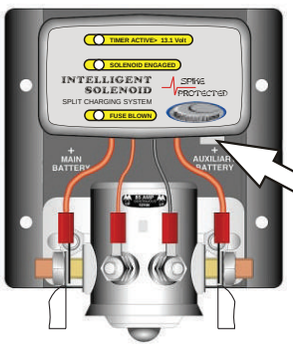

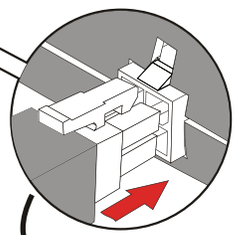

Plug one end of the cable into the port of the Intelligent Solenoid .
Make sure the cable clips into place and does not pull loose.

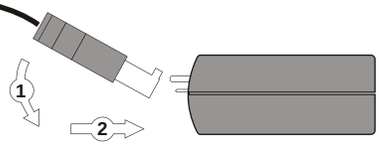

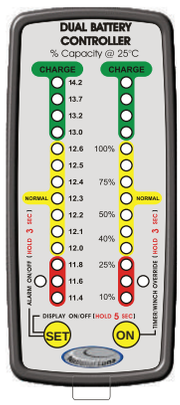

The remaining plug connects to the Dual Battery Controller. The plug must be inserted at an angle in order to allow the locating pins to enter the Controller housing and be clipped in place

Make sure the plug mates firmly with the matching connector on the Dual Battery Controller and does not pull loose.

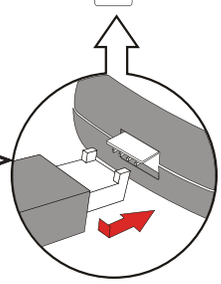

At this point, power will be applied to the Dual Battery Controller and the displays will show the voltage levels of both main and auxiliary batteries.

(If one of these batteries is not present, the appropriate display will flash and an alarm will be heard).

How it Works!

The Intelligent Solenoid works by sensing the increased charge voltage on the main battery.
(This allows the unit to detect when the battery is being charged.)

The Intelligent Solenoid will not allow a connection if the auxiliary battery has reverse polarity, is short-circuited, or does not exist.

Start the vehicle: The TIMER ACTIVE > 13.1 Volt LED on the Intelligent Solenoid unit will start to flash.

Once the TIMER ACTIVE > 13.1 Volt LED has started to flash, an internal timer starts. (Expect the LED to flash for 5 minutes).

After the timer has elapsed, the solenoid will connect and the SOLENOID ENGAGED LED will come on.
At this point, charge will be allowed to flow to the auxiliary battery.

After switching off the vehicle: The Intelligent Solenoid will monitor battery voltage.
Depending on the type and capacity of the batteries installed, ambient temperature, and loads connected to the system, the rate at which the battery voltage drops will vary.
The Intelligent Solenoid will disconnect once battery voltage has dropped below 12.7 volts.

The FUSE BLOWN LED will indicate that there is an fault which has caused the internal fuse to blow.
This can happen if the Solenoid contacts are accidentally short-circuited, or there is water damage to the electrical circuit. Damage to the monitor cable can also cause the fuse to blow.

In order to replace the internal fuse, the Intelligent solenoid sticker will need to be removed and the housing screws removed. The fuse must be replaced with the same type and rating for correct operation.
(It is recommended that a service agent carry out this repair and check for any further damage).

Dual Battery Controller Operation

The Controller is fitted with two displays (one each for main and auxiliary batteries). If either of these batteries are not installed, the Controller will warn the user of this situation with an audible alarm (if enabled) and a flashing warning on the appropriate display. The alarm will stop once battery voltage has risen above 12.0V.

A special feature of the Dual Battery Controller is its ability to “over-ride” the Intelligent Solenoid timer and allow the user to force the main auxiliary batteries to connect. This is particularly useful when a winch is used or for “jump-starting” from the auxiliary battery.

NB - If the Timer over-ride facility is used for jump-starting, it is likely that the in-line fuses will blow. To prevent this from happening, activate the over-ride action and allow a few minutes for charge to flow from the auxiliary battery to the main battery before attempting to start the engine. Alternatively, increase the rating of the in-line fuses. (1 & 2). The maximum available fuse rating is 125 amps.

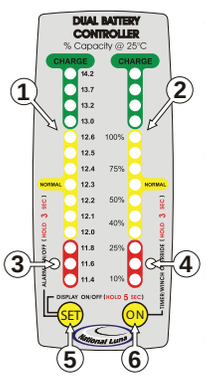

1. MAIN battery display
2. AUXILARY battery display
3. ALARM status LED
4. Timer OVER-RIDE status LED
5. ALARM/DISPLAY BUTTON
6. TIMER OVER-RIDE BUTTON

ON Timer Over-Ride

The Timer Over-Ride allows the user to send a signal to the Intelligent Solenoid, instructing the system to connect.
To enable the timer-overide facility, press and hold the “ON” button for 3 seconds or until a short beep is heard.
When active, the “TIMER OVER-RIDE” light will flash and will remain active for 5 minutes only.
Use the same procedure to de-activate the timer “over-ride”.

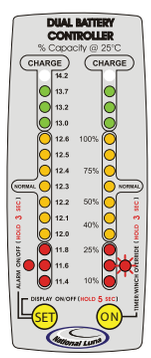

Excessive discharge (See ILLUSTRATION C - Page 8)

If the voltage on either battery drops below 11.4V, the Controller will flash the bottom red light on the appropriate display and an audible alarm will be heard (if enabled).
The same low-voltage warning will be shown if either battery is missing. (e.g. auxiliary battery not connected - typical with a removable battery or trailer / caravan connection).

(The low-voltage alarm will stop once voltage has risen above 12.0V.)

SET Activating / De-activating the alarm

The alarm on the Dual Controller is on by default. To de-activate the alarm, press and hold the ‘SET’ button for 3 seconds or until a short beep is heard and the ALARM light goes out. To activate the alarm, the same proceedure is used.

SET Activating / De-activating the display

The user has the option to turn both displays off. If this option is selected, the Controller will still function normally and will “wake-up” if any error conditions occur.
Both displays on the Dual Battery Controller are on by default. To turn the display off, press and hold the ‘SET’ button until the display disappears (approx. 5 seconds). To re-enable the display, the same procedure is used.

Note that a beep will occur after 3 seconds (ALARM SET), but that the button must be held for an additional 2 seconds until the display changes. (The alarm is not activated/de-activated in this sequence)

Activating / De-activating the display (only one battery installed)

Both batteries must be installed for the system to operate. Should one of the batteries not be installed, the display cannot be switched off as the system would identify this as a fault and remain on. In such a case, the black earth wire on the Intelligent Solenoid would need to be disconnected or have an in-line switch installed. (See step 4 on page 5).

Factory Default settings

When the Dual Battery Controller is plugged in, the audible alarm and display will be operational by default. If these settings are changed and the Controller is subsequently unplugged, the Dual Controller will revert to the default setting once plugged in again. (ie. Settings are not saved)

Typical Monitor Readings @ 25°C

The DUAL BATTERY MONITOR has been developed to provide the user with information on both the main car battery and the auxiliary battery. The unit will provide an LED display indicating the voltage reading on the battery and give an approximate idea of the state of charge of the battery.
The most accurate reading will be obtained at 25°C.

Illustration A

READING THE BATTERY MONITOR BEFORE STARTING (i.e. in the morning).The monitor will reflect the battery readings with three RED LED's and between five and six of the ORANGE LED's lit up. This will indicate that both batteries are in good condition and that the voltages are 12.5 volts or above.

Illustration B

Assuming that a fridge (auxiliary load) has been connected to the auxiliary battery and is still running, the reading on the auxiliary battery could read three RED LED's. This would indicate that the battery is between 11.8 volts and 12.0 volts, but that one is operating in the last 25% of battery capacity. This is near the area of **EXCESSIVE DISCHARGE**, and it is important to re-charge the battery as soon as possible.

Illustration A

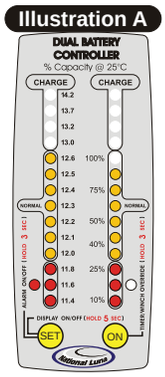

Illustration B

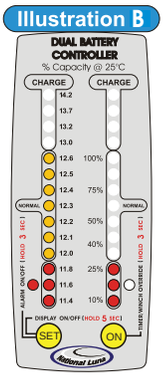

Illustration C

Low-voltage alarm : (Auxiliary battery)
Should the voltage drop below 11.4 volts, the audible alarm will activate and the red alarm LED will flash. (The alarm can be switched off, since it may not always be practical to recharge the battery immediately).

Illustration D

Main Battery Low
Should the main battery voltage be significantly lower than the auxiliary battery voltage, it is possible that the battery may be damaged or it has been drained by a load (ie. Alarm system, radio, lights, etc).

Illustration C

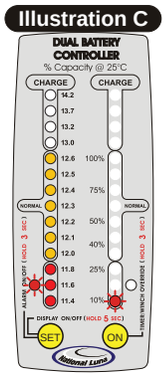

Illustration D

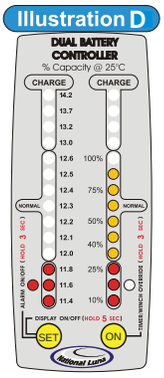

Illustration E

Car started: (Before Intelligent Solenoid connection)
The alternator will supply voltage to the main battery once the engine is started. At least 3 GREEN LED's should be expected on the monitor. If only 1 or 2 GREEN LED's are shown, inspect your charging system. One can test the alternator regulation by switching on headlamps, airconditioner, or any other loads.
A significant drop in reading indicates a faulty alternator.

Illustration F

Car running: (After Intelligent Solenoid connection)
Once the solenoid connects, the auxiliary battery will now receive a charge from the alternator. Both displays should reflect similar readings. It is possible that only 2 GREEN LED's will be displayed initially. This occurs when the auxiliary battery is flat and is accepting maximum charge. Over time, expect 3 to 4 green LED's to be shown as the battery charges.

Illustration E

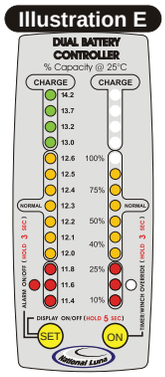

Illustration F

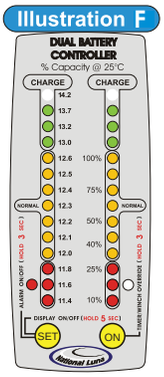

Typical voltage-capacity relationship of a lead-acid battery at 25°C

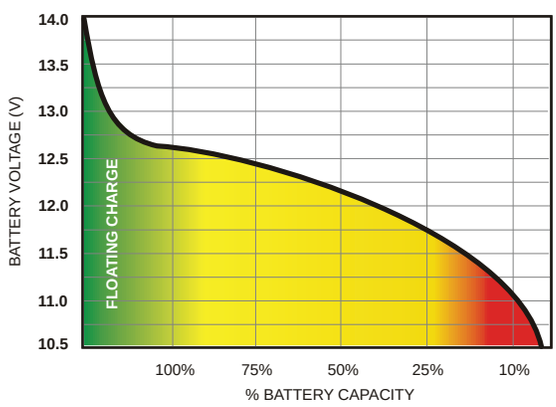

Voltages measured above 12.6V on the battery indicate that the battery is charging or may have a ***"floating charge".*** The Dual Battery Controller follows the battery discharge curve and gives a good estimate of battery capacity based on voltage.
It can be seen that the battery voltage collapses below 11.8V. At this point the battery is considered to be flat.
Note - Damaged or aged batteries may show a "fully charged" voltage, but the battery capacity could still be less than 50%. Typically, a rapid drop of the Dual Controller LED display will indentify this problem.

Battery Basics

This Split-Charging kit has been designed to be compatible with standard motor vehicle charging systems

Obviously, in the world-wide market, a huge variety of batteries and technical designs exist. Exact battery characteristics may differ between battery technology, manufacturer, age and temperature. The user must select an available auxiliary battery best suited for his purpose.

The following battery information serves as a simple guide only. More detailed battery information can be obtained from the following sources : **www.batteryuniversity.com**
www.batterycouncil.org

Major Battery Types:

Batteries are typically described in two ways: By ***application*** (what they are used for)
construction (how they are built).

Application examples are: Automotive, marine, solar electrical (PV), standby power, leisure (RV), etc.
Construction relates to the physical and chemical characteristics. ie. flooded, gelled, and AGM (Absorbed Glass Mat). Flooded may be standard (with removable caps - typical car battery), or the so-called "maintenance free" type.

Choosing a battery for your application:

Generally, battery life-span is related to time, temperature, number of charge/discharge cycles and **most importantly, the depth of discharge and subsequent recharge rate.**

It is preferable to fit a large capacity auxiliary battery. Fitting a small battery increases the number of charge/discharge cycles for a specific application and deep discharges are more likely to occur (reducing the battery life considerably). When choosing a battery for your specific application, one should consider the following :
How deep do you expect to discharge the battery? What capacity do you require? How often do you discharge the battery?
A higher capacity battery (Ampere hours) allows longer usage before the need to re-charge.

High cycle vs Deep cycle :

High cycle batteries (starting batteries) are commonly used to start and run engines. Engine starters need a high starting current for a very short time. The high cycle batteries have a large number of thin plates, ensuring large surface area, this allows the high cycle battery to supply a large current for short periods and re-charge quickly.
If high-cycle batteries are deep-discharged, the plates will deteriorate quickly and reduce battery life considerably. (Generally, these battery types should not be discharged by more than 50%).

Deep cycle batteries have thicker plates and can be discharged by as much as 80%. (Considered to be fully discharged)
These type of batteries generally take much **longer to re-charge** than high-cycle batteries.
The **National Luna battery monitor** has been designed to accurately indicate the charge state of either High-cycle or Deep-cycle batteries.

Obtaining maximum battery life:

- For all lead-acid technologies, batteries should be fully re-charged as soon as possible after any usage.
- Batteries should never be left in a "flat" state even if they are disconnected.
- Re-charge the battery with the battery manufacturers recommended charge voltage.

There are a number of different alternator charging voltage standards in the motor industry -
These are : 13.7V, 14.2V and 14.5V.

The user should ensure that the correct battery is selected to match this charging voltage.
In many cases the alternator can be adjusted / upgraded for an optimum charge voltage.

Extended Configurations

These extended configurations show options for installing your split-charge system.

Make sure your vehicle alternator is capable of delivering the necessary power to sustain the increase in load.

For best results, use the recommended cable thickness and proper cable terminations.

Configuration 1 - 1 x Auxiliary battery fitted into motor vehicle (16mm^2 power cable)

This is the most popular installation where the auxillary battery can be installed in the engine compartment.
Where space not available in the engine compartment, the battery can be mounted at the back of the vehicle.

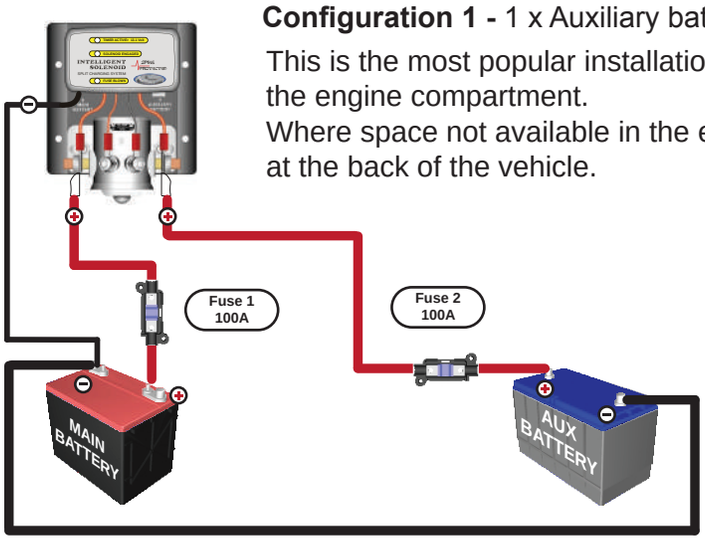

Main Vehicle Battery **1 x Auxilliary Battery**

Configuration 2 - 2 x Auxiliary batteries in parallel (16mm^2 power cable)

Sometimes extra capacity is required for large equipment or for extended periods between re-charging. Simply connect a second auxillary battery in parallel with the first. The total capacity of the battery bank will now be the sum of the individual battery capacities. It is recommended to use the same size and manufacturer of the batteries in the auxillary bank.

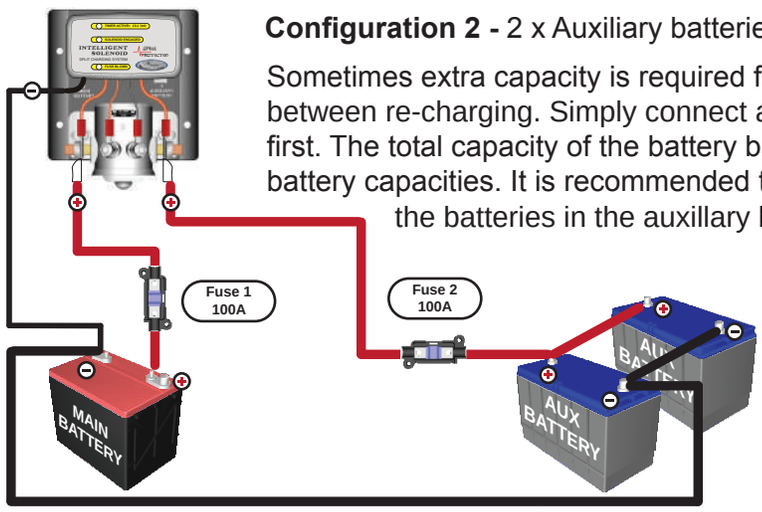

Note that if FUSE 2 is used, it must be of a sufficient rating to accomodate charge current to both auxillary batteries. (Recommended 100A).

Main Vehicle Battery **2 x Auxillary Battery**

Configuration 3 - Split charge system in car and with trailer (25mm^2 to 35mm^2)

Sometimes caravans and 4x4 trailers are equipped with batteries.
In order to charge these batteries, it is necessary to connect them to the vehicles charging system. To do this, use a heavy duty coupler and 25mm^2 to 35mm^2 cable (in order to minimize voltage losses). It is recommended to fit another in-line fuse close to the 2nd auxillary battery (Fuse 3) for safety.

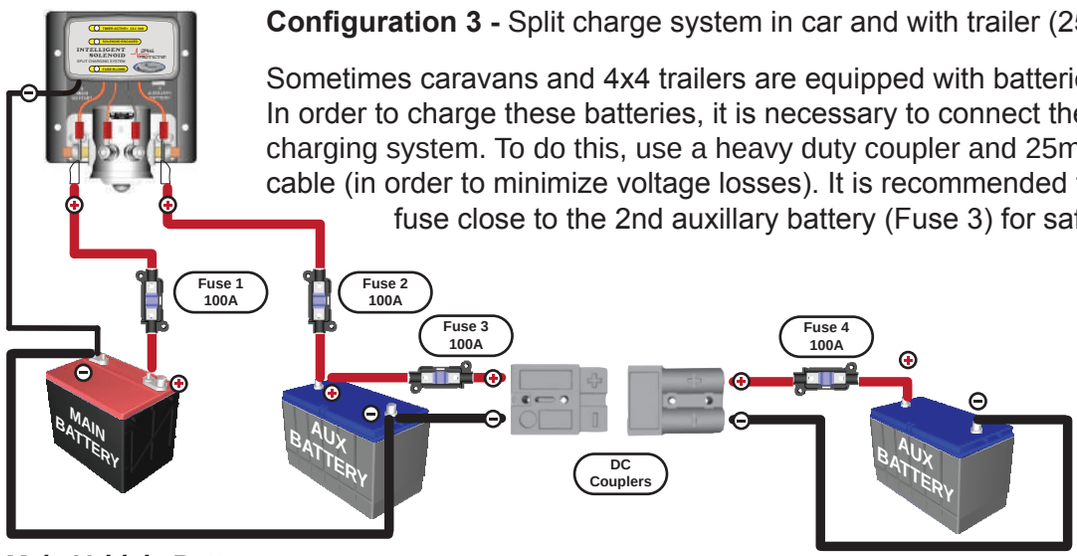

Main Vehicle Battery **1 x Trailer Battery**

Extended Configurations - Cont /

These extended configurations show additional options for installing your split-charge system.

Configuration 4 - 1 x Auxiliary battery in trailer(16mm^2 power cable)

This configuration shows the solenoid fitted in the motor vehicle and the auxillary battery in the trailer or caravan.
Note that if one is using the Dual Controller monitor unit in this application, the low voltage alarm will activate when the auxilary battery is disconected.

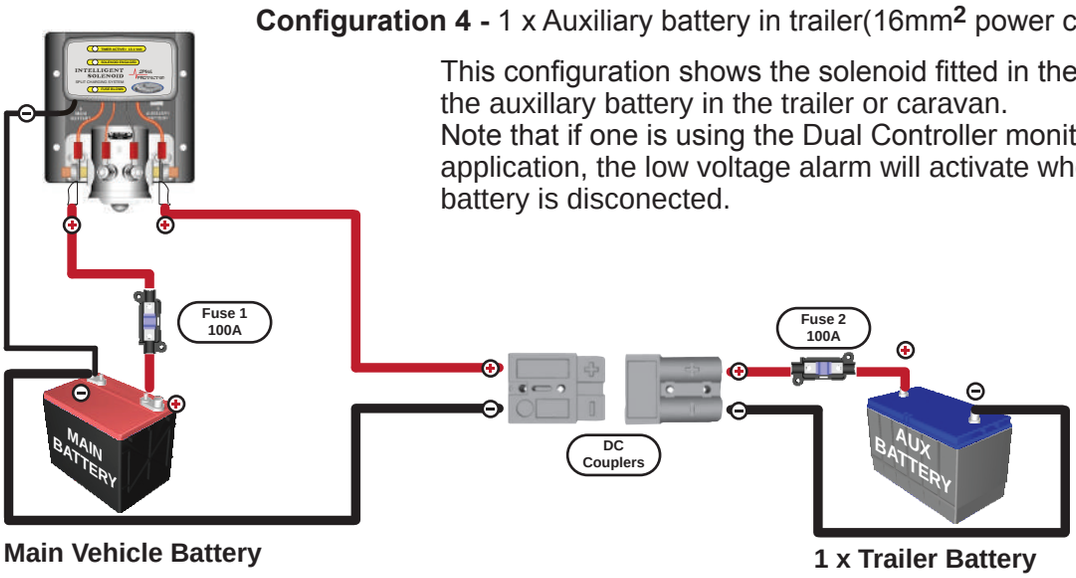

Configuration 5 - 2 x Auxiliary batteries in parallel in trailer (25mm^2 to 35mm^2)

Sometimes caravans and 4x4 trailers are equipped with 2 x batteries. In order to charge these batteries, it is necessary to connect them to the vehicle's charging system. To do this, use a heavy duty coupler and 25mm^2 to 35mm^2 cable (in order to minimize voltage losses). It is recommended to fit an in-line fuse close to the 2nd auxillary battery (Fuse 2) for safety.
Note that if one is using the Dual Controller monitor unit in this application, the low voltage alarm will activate when the auxilary batteries are disconected.

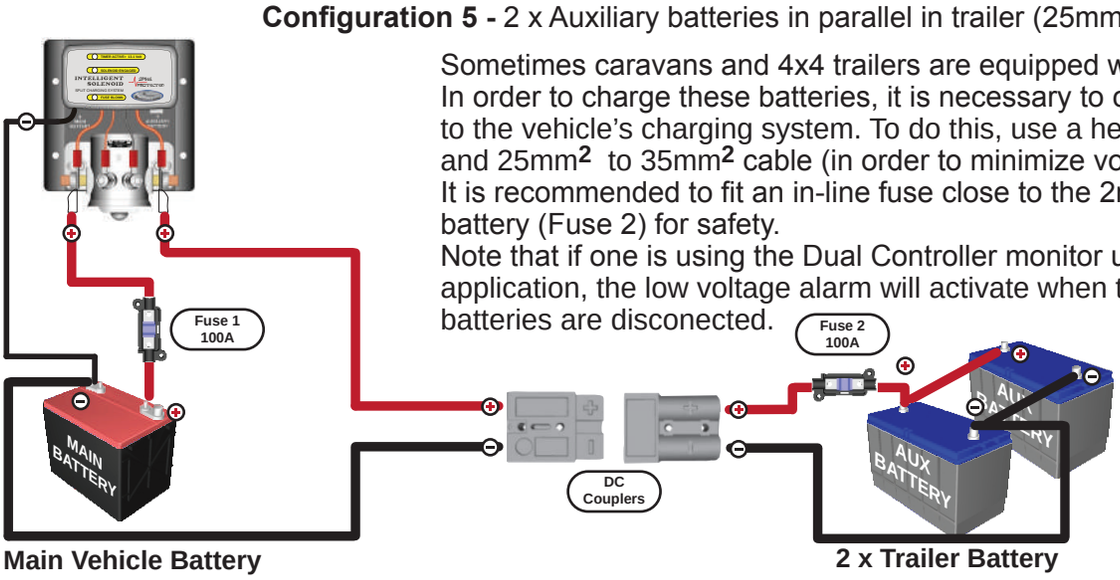

Configuration 6 - Split charge system with solenoid fitted into the trailer (16mm^2)

This configuration shows the solenoid fitted in the trailer or caravan, and not in the motor vehicle.

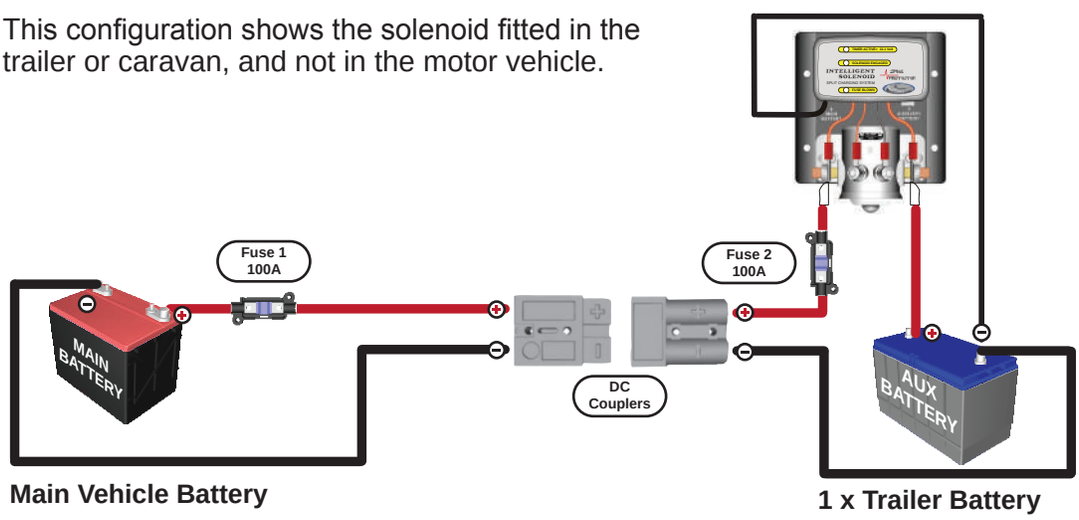

Extended Configurations - Cont /

These extended configurations show additional options for installing your split-charge system.

Configuration 7 - Split charge system with a winch fitted (35mm^2 cable required)

A number of people install winch cables to the auxillary battery. This is not recommended as the alternator supplies a large portion of current to the winch, ensuring optimum winch speed and power.

If a dual battery system is fitted to a vehicle with a winch, it is recommended to use 35mm^2 cable.
Ensure that proper connections are made when fitting a winch because of the high current used while winching.
It is also recommended to fit a large MAIN vehicle battery with a high “Cold Cranking Amps” (CCA) rating which can deliver high current for short durations.
Note that fuses are not appropriate for this configuration because of the high current flow expected.

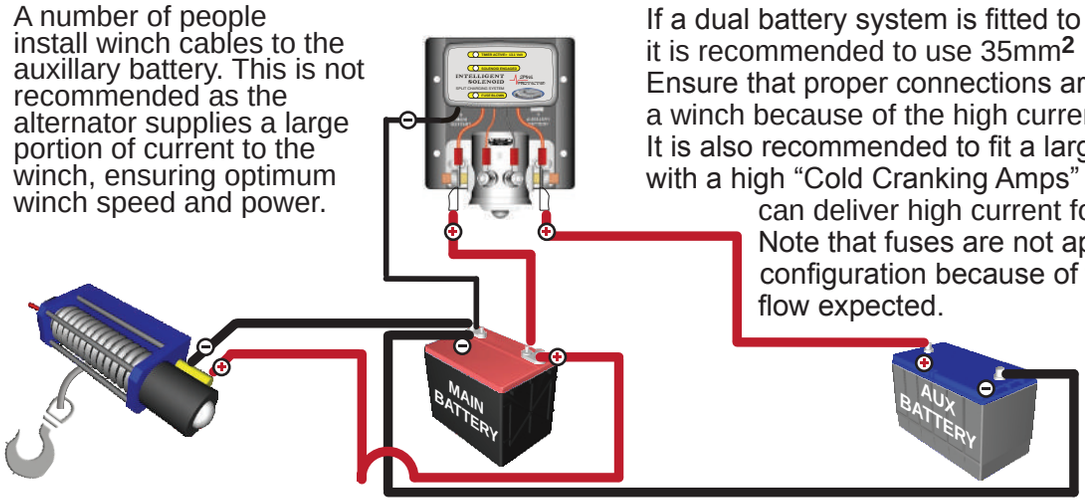

Main Vehicle Battery

1 x Auxillary Battery

Configuration 8 - Split charge system with a solar panel connected to the auxillary battery in the motor vehicle.

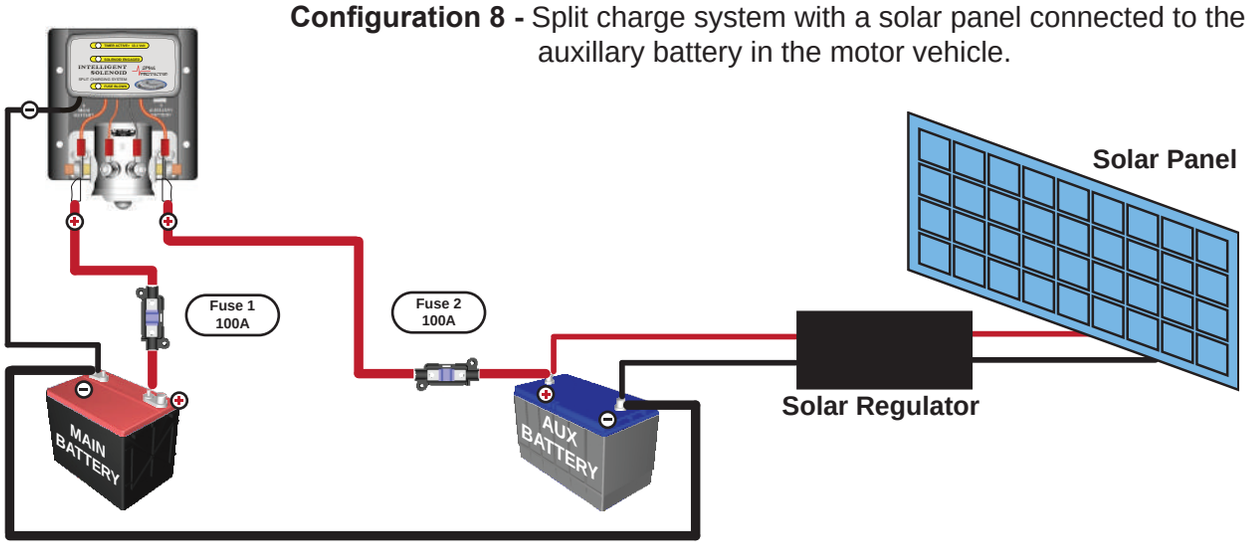

Main Vehicle Battery

1 x Auxilliary Battery

Configuration 9 - Split charge system with a solar panel connected to the auxillary battery in the trailer / caravan.

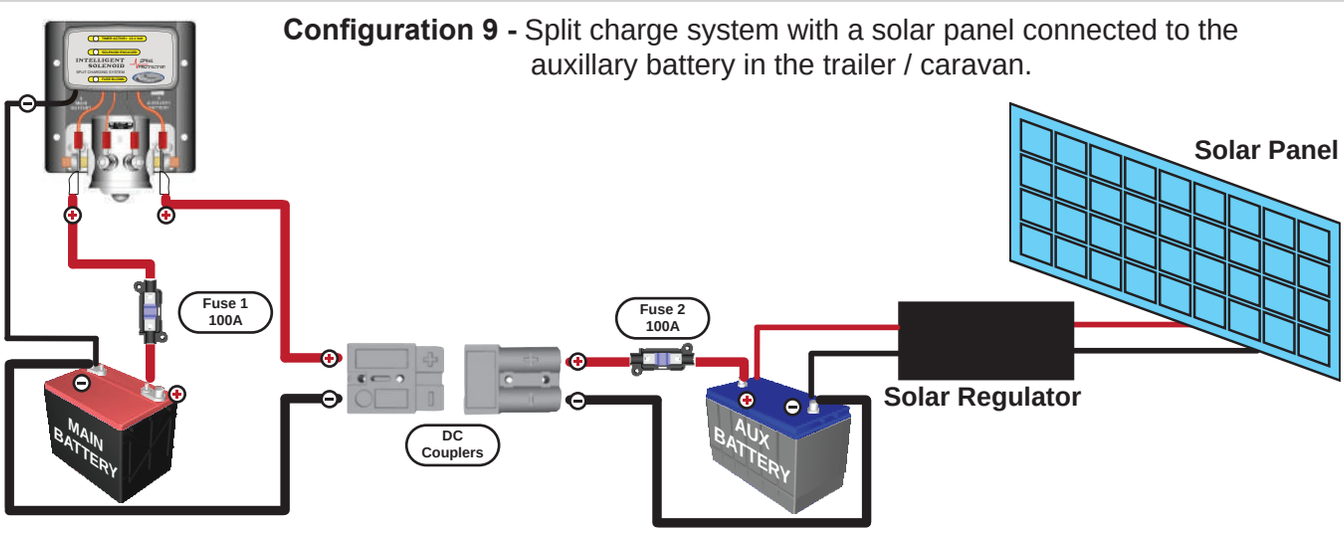

Main Vehicle Battery

1 x Trailer Battery

Technical Operation

The **Intelligent Solenoid** has a pre-programmed cycle which operates through specific phases. The graphic illustration below represents the required voltage levels/thresholds for correct operation as well as switching time cycles.

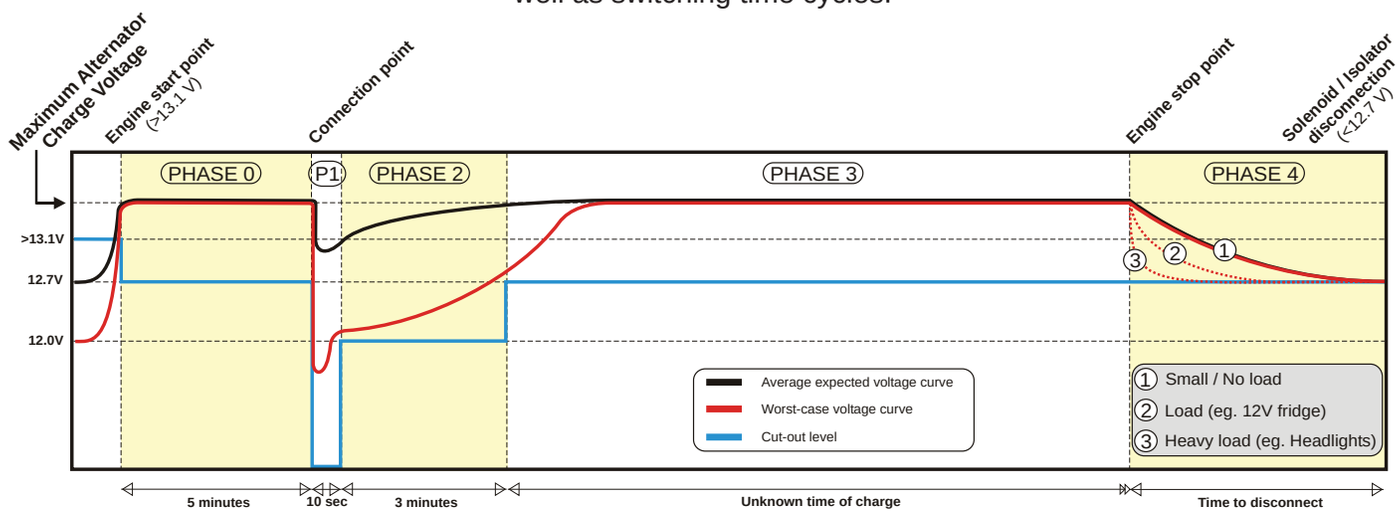

BEFORE STARTING

The voltage of a car main battery will depend on temperature, battery drain due to alarm systems and accessories, time since last use and charge, as well as age and the general condition of the battery. Thus one can expect a main car battery (still capable of starting the car) to reflect a voltage of between 12.0V and 12.6V before starting.

PHASE 0

After starting the vehicle, the alternator will deliver a charging voltage. Depending on the type and rating of the alternator, one can expect to read a voltage of between 13.6V and 14.5V.
When the Intelligent Solenoid detects a voltage above 13.1V (engine started), it will initiate a 5-minute timer delay before allowing the solenoid to connect the auxiliary battery to the main battery.
(During this delay, the alternator will deliver maximum charge to the main battery, in order to recover the starting drain.)

PHASE 1

At the point of connection, an instantaneous voltage collapse can occur due to the additional load of the auxiliary battery. The Intelligent Solenoid will allow a voltage collapse below 12.0V for a period of 10 seconds only. After this period,the charging voltage must be above 12.0V in order to stay connected.
(If this voltage level is not maintained above 12.0V, the Intelligent Solenoid will automatically disconnect as a safety protection feature.)

PHASE 2

Provided the charging voltage has risen above 12.0V, the Intelligent Solenoid will monitor voltage for a period of 3 minutes, after which the charging voltage must have risen above 12.7V.
(If, after this 3 minute period, the charging voltage has not risen above 12.7V, the Intelligent Solenoid will assume a faulty or over-loaded alternator, and disconnect as a protection feature).

PHASE 3

The Intelligent Solenoid will disconnect automatically when it senses a voltage below 12.7V.
(Note that a charging voltage below 13.5V is not desirable as this reduces charging rate - (See BATTERY BASICS pg 9).

PHASE 4

Once the vehicle's engine has been switched off, the battery voltages will drop. Depending on the temperature, type and capacity of battery, as well as the overall loads connected to the battery, the period of time to drop to 12.7V will vary. The Intelligent Solenoid will disconnect automatically when it senses a voltage below 12.7V.

NOTE - If any PHASE is not completed, the Intelligent Solenoid will revert to the beginning of the cycle.

Cable Losses

For a typical installation, there will be voltage losses experienced with any cable used.
The term “Cable losses” refers to the voltage that is “lost” over the length of the cable due to the resistance of the conductors.
As voltage losses are only apparent when there is current flow, one cannot test for these losses without a load attached to the system.

To minimise voltage loss, check for the following :

Has the correct cable been used for the installation ? (minimum of 16mm^2 recommended)
Are the cables terminated with good connections ? (Poor connections increase losses)
Has the cable been kept as short as possible ? (Cable resistance is proportional to its length)

Below is a table comparing cable cross sectional area (thickness) to expected voltage lost per meter of cable length.
(Note that specifications may differ between different manufacturers of cables).

Cable losses at DC current of 10, 20 and 40 Amps
(experienced as volts per meter)

Cable cross section	Voltage loss @ 10 Amps	Voltage loss @ 20 Amps	Voltage loss @ 40 Amps
4mm^2	0.10 V/m	0.19 V/m	0.38 V/m
6mm^2	0.06 V/m	0.13 V/m	0.26 V/m
10mm^2	0.04 V/m	0.08 V/m	0.15 V/m
16mm^2	0.02 V/m	0.05 V/m	0.10 V/m
25mm^2	0.02 V/m	0.03 V/m	0.06 V/m
35mm^2	0.01 V/m	0.02 V/m	0.04 V/m

For the total cable loss, multiply the voltage loss per meter by the number of meters used.

It is also important to realise that the total length of your cable includes the return path.
This means the total length of cable from the battery (source) to the load and back again to the battery.
(i.e. If all the cable used in this kit is used, the total cable length is 12 meters).
Example - An installation requires 6 meters of RED cable and 6 meters of BLACK cable. The total cable length is 12 meters. Compare the voltage losses of 4mm^2 cable and 16mm^2 cable when a current of 20A flows.

4mm^2 cable - 0.19 Volts / metre x 12 metres = 2.28 volts lost.	A battery connected to a 14.2 volt alternator will now only receive 11.9 volts. This voltage is insufficient to charge the battery at any significant current. Battery will not charge fully.
4mm^2 cable - 0.05 Volts / metre x 12 metres = 0.6 volts lost.	A battery connected to a 14.2 volt alternator will now receive 13.6 volts. This voltage is not ideal, but will allow the battery to be charged at a high rate. As the battery charges, current is reduced and less voltage is lost.

Keep in mind that these losses reflect the cable losses only, there will be more losses experienced wherever there are fuses, connections and terminals and voltage loss will change in current flow.

From the above information, it may seem that the losses are not significant. It is however essential to realise that a small change in voltage applied to a battery may change the charging rate dramatically.

NOTES

www.nationalluna.com

National Luna sales and support:
Tel : +27 (0)11 452-5438
Fax :+27 (0)11 452-5263
info@nationalluna.com
sales@nationalluna.com

STREET ADDRESS
34 Plantation Road
Eastleigh, Edenvale
1609 Johannesburg
South Africa

POSTAL ADDRESS
PO Box 8899
Edenglen 1613
Johannesburg
South Africa

CONTACT
+27 (0)11 452-5438 (tel)
+27 (0)11 452-5263 (fax)
info@nationalluna.com
www.nationalluna.com

NL-SCK-IM-R-2015