CONGRATULATIONS

on the purchase of your new CTEK professional battery management unit. This unit is part of a range of professional battery chargers from CTEK SWEDEN AB. It represents the latest technology in battery charging.
Using the CTEK D250S DUAL and SMARTPASS products, you can maximize the performance of your 12 V DC source.

IMPORTANT SAFETY INSTRUCTIONS

CALIFORNIA PROPOSITION 65

WARNING: This product contains chemical known to the state of California to cause cancer or reproductive toxicity.

1. SAVE THESE INSTRUCTIONS
   – This manual contains important safety and operating instructions for battery charger Models D250S DUAL (1044) and SMARTPASS (1058).
2. Use of an attachement not recommended or sold by the CTEK may result in a risk of fire, electric shock, or injury to persons.
3. When charging, batteries can emit explosive gases, therefore it is essential to prevent flames and sparks. The charger is designed for charging 12 V lead-acid batteries. Do not use for any other purpose.
4. Always provide good ventilation when charging.
5. Make sure that cables used have sufficient cable area, see CABLE DIMENSIONS.
6. Do not operate charger with damaged cord - replace the cord immediately.
7. Never operate the charger if it has received a sharp blow, been dropped or otherwise damaged in any way; take it to a CTEK representative.
8. Do not disassemble charger; take it to the retailer when service or repair is required. Incorrect reassembly may result in a risk of electrical shock or fire.
9. Disconnect the products before attempting any maintenance or cleaning
10. WARNING - RISK OF EXPLOSIVE GASES
    a) WORKING IN VICINITY OF A LEAD-ACID BATTERY IS DANGEROUS. BATTERIES

GENERATE EXPLOSIVE GASES DURING NORMAL BATTERY OPERATION. FOR THIS REASON, IT IS OF UTMOST IMPORTANCE THAT, YOU FOLLOW THE INSTRUCTIONS EACH TIME YOU INSTALL THE CHARGER.

b) To reduce risk of battery explosion, follow these instructions and those published by the battery manufacturer and the manufacturer of any equipment you intend to use in vicinity of battery. Review cautionary marking on these products and on engine.
c) Disconnect battery poles before installation
d) D250S DUAL is not reverse polarity protected.

11. PERSONAL PRECAUTIONS

a) Consider having someone close enough by to come to your aid when you work near a lead-acid battery.
b) Have plenty of fresh water and soap nearby in case battery acid contacts skin, clothing or eyes.
c) Wear complete eye protection and clothing protection. Avoid touching eyes while working near battery.
d) If battery acid contacts skin or clothing, wash immediately with soap and water. If acid enters eye, immediately flood eye with running cold water for at least 10 minutes and get medical attention immediately.
e) NEVER smoke or allow a spark or flame in vicinity of battery or engine.
f) Be extra cautious to reduce risk of dropping a metal tool onto battery. It might spark or short-circuit battery or other electrical part that may cause explosion.
g) Remove personal metal items such as rings, bracelets, necklaces, and watches when working with lead-acid battery. A lead-acid battery can produce a short-circuit current high enough to weld a ring or the like to metal, causing a severe burn.
h) Use charger for charging a LEAD-ACID battery only. Do not use battery charger for charging dry-cell batteries that are commonly used with home appliances. These batteries may burst and cause injury to persons and damage to property.
i) Never charge a frozen battery.

12. PREPARING TO CHARGE

a) If necessary to remove battery from vehicle to charge, always remove grounded terminal from battery first. Make sure all accessories in the vehicle are off, so as not to cause an arc.

b) Be sure area around battery is well ventilated while battery is being charged.
c) Clean battery terminals. Be careful to keep corrosion from coming in contact with eyes.
d) Add distilled water in each cell until battery acid reaches level specified by battery manufacturer. Do not overfill. For a battery without removable cell caps, such as valve regulated lead acid batteries, carefully follow manufacturer's recharging instruction.
e) Study all battery manufacturer's specific precautions while charging and recommended rates of charge.
f) Determine voltage of battery by referring to vehicles manual.

13. CHARGER LOCATION

a) Never place charger directly above battery being charged; gases from battery will corrode and damage charger.
b) Never allow battery acid to drip on charger when reading electrolyte specific gravity or filling battery.
c) Do not set a battery on top of charger.

14. FOLLOW THESE STEPS WHEN BATTERY IS INSTALLED IN VEHICLE. A SPARK NEAR BATTERY MAY CAUSE BATTERY EXPLOSION. TO REDUCE RISK OF A SPARK NEAR BATTERY:

a) Position cords to reduce risk of damage by hood, door or moving engine part.
b) Stay clear of fan blades, belts, pulleys, and other parts that can cause injury to persons.
c) Check polarity of battery posts. POSITIVE (POS, P, +) battery post usually has larger diameter than NEGATIVE (NEG, N, -) post.
d) Determine which post of battery is grounded (connected) to the chassis. If negative post is grounded to the chassis (as in most vehicles) see (e). **The battery charger can not be used with positive-grounded batteries.**
e) For Negative-grounded vehicle, connect POSITIVE connector from battery charger to POSITIVE (POS, P, +) ungrounded post of battery. Connect NEGATIVE connector from battery charger to vehicle chassis or engine block away from battery. Do not connect to carburetor, fuel lines, or sheet-metal body parts. Connect to a heavy gage metal part of the frame or engine block.
f) When disconnecting charger, always do so in reverse sequence of connecting procedure and break first connection while as far away from battery as practical.

15. FOLLOW THESE STEPS WHEN BATTERY IS OUTSIDE VEHICLE. A SPARK NEAR BATTERY MAY CAUSE BATTERY EXPLOSION. TO REDUCE RISK OF A SPARK NEAR BATTERY:

a) Check polarity of battery terminals. POSITIVE (POS, P, +) battery post usually has a larger diameter than NEGATIVE (NEG, N, -) post.
b) Attach at least a 24-inch-long 6-gauge (AWG) insulated battery cable to NEGATIVE (NEG, N, –) battery post.
c) Connect POSITIVE charger connector to POSITIVE (POS, P, +) post of battery.
d) Position yourself and free end of cable as far away from battery as possible – then connect NEGATIVE charger connector to NEGATIVE (NEG, N, -) post of battery.
e) Do not face battery when making the final connection.
f) When disconnecting charger, always do so in reverse sequence of connecting procedure and break first connection while as far away from battery as practical.

SAFETY

- D250S Dual and SMARTPASS is designed for 12V lead-acid batteries. Do not use the unit for any other batteries.
- Disconnect battery poles before installation
- D250S Dual is not sprak proof.
- The installation must include a fuse according to recommendations in table “CABLE DIMENSIONS”.

⚠ WARNING!
D250S DUAL and SMARTPASS is not reverse polarity protected.

All installations on boats must follow ISO 10133. Please note!

1. Connections from the battery must be fused close to the battery.
2. Batteries must be permanently mounted in ventilated areas.
3. Cables must be placed in tubes, separated from cables for 110/230 V (shore power), or be attach to the surface every 300 mm.
4. Cables in the engine room must be rated to withstand 70°C/158°F
5. For a permanently connencet battery charger: GROUNDING INSTRUCTIONS– This battery charger should be connected to a grounded, metal, permanent

wiring system; or an equipment-grounded conductor should be run with circuit conductors and connected to equipment-grounded terminal or lead on battery charger. Connections to battery charger should comply with all local codes and ordinances.

D250S DUAL

The D250S Dual has 2 inputs. The Service battery will be charged from the alternator, solar panel, or both in combination. The solar panel adjusts itself to the Starter battery voltage. The Starter battery will be charged and maintained directly by the solar panel if the Service battery is fully charged.

D250S DUAL

FEATURES:

- Multi-step 20 A temperature compensated battery charging and battery maintenance.
- Battery separation of Starter and Service batteries.
- Maximum power point tracking for solar panels charging the Service battery.
- Two power source inputs (alternator, solar, wind, Supply battery and other).
- Coordination of the two inputs, allowing parallel operation.
- The solar input will also maintain the Alternator battery.
- Built in battery guard for the Alternator battery.

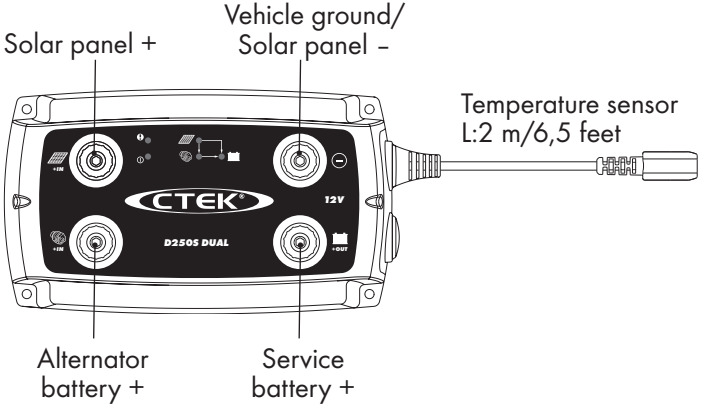

EN

DEFINITIONS SOLAR PANEL

Depending on the application, it could also be referred to as
- PV panel
- Photovoltaic panel

CONNECTIONS

- Solar panel
- Wind power

DEFINITIONS SERVICE BATTERY

Depending on the application, it could also be referred to as
- House battery
- Domestic battery
- Consumer battery

CONNECTIONS

- Electrical equipment
- Battery bank
- SMARTPASS service battery +

DEFINITIONS ALTERNATOR BATTERY

Depending on the application, it could also be referred to as
- Starter battery

CONNECTIONS

- Trailer coupling
- Alternator
- SMARTPASS Alternator +

D250S DUAL LAMPS

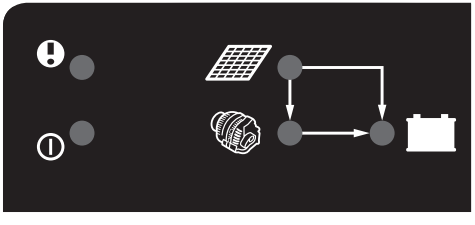

Error lamp

Power lamp

Solar power lamp

Alternator battery lamp

Service battery lamp

D250S DUAL LAMP FUNCTION

	LAMP	FUNCTION
⏻	Power lamp	D250S DUAL connected correctly, ready to use
	Alternator battery lamp	Alternator running
	Service battery lamp	Charging of Service battery
	Solar panel lamp	Solar panel in operation

D250S DUAL LAMP INDICATION DURING NORMAL OPERATION

⏻				LIT WITH A STEADY GLOW
●	●	●		Service battery charged by the alternator
●		●	●	Service battery charged by the solar panel
●	●	●	●	Service battery charged by both the alternator and solar panel
●	●		●	Service battery fully charged. Alternator battery maintained by the solar panel
☀				When the Power lamp flickers, the unit is in power saving mode

D250S DUAL LAMP ERROR INDICATION

● Steady lamp ☀ Flashing lamp

⏻				!	EXPLANATION	RECOMMENDATION
●				☀	High temperature detected at either unit or service battery	Consider relocationg unit and/or service battery
●	●		●	☀	Service battery connection problem detected	Check Service battery connection and fuse
●			●	☀	Service battery connection problem detected	Check Service battery connection and fuse
●	●			☀	Service battery connection problem detected	Check Service battery connection and fuse

SMARTPASS

SMARTPASS can operate as a stand-alone unit, but works best in combination with D250S Dual. The SMARTPASS creates a priority path for charging the Service battery to recharge it more quickly and efficiently. Attached energy sources like solar, wind or shore power will charge both the Service and the Starter batteries through the SMARTPASS. Service batteries that are overheated due to age, high ambient temperature or other battery problems will be protected from high alternator current.

SMARTPASS

FEATURES:

The CTEK SMARTPASS adds additional functionality for higher output alternators, larger battery banks and/or high parallel loads.

- Separation of consumers and Service batteries during charging, which improves the charging capacity significantly, and lowers the consumer voltage, which increases expected service life of lights and other electronics.
- Service battery watch, which avoids harmful deep discharges that otherwise would shorten battery life. The battery watch also protects navigation, radio and emergency light from being out of electricity.
- Over-temperature protection of Service battery. High battery temperature could significantly reduce battery life.
- Maintenance charge of Starter battery, which simplifies installation with fewer components.
- Simplified installation of AC/DC chargers (shore power). Only one output from the AC/DC charger needed.

The CTEK SMARTPASS is designed to work together with 1-2 CTEK D250S DUAL, but can also be used alone.

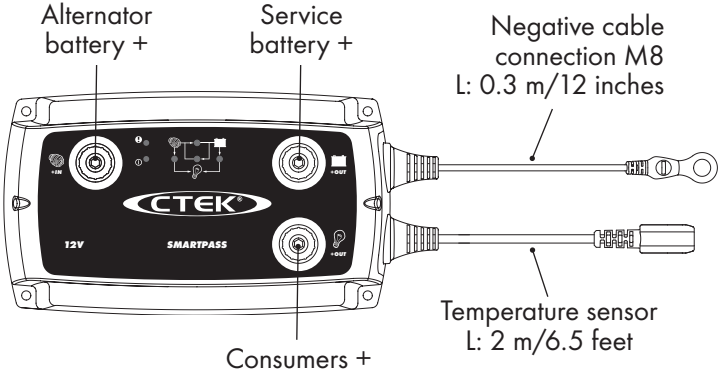

DEFINITIONS ALTERNATOR BATTERY

Depending on the application, it could also be referred to as
- Starter battery

CONNECTIONS

- Trailer coupling
- Solar panel
- Wind power
- Alternator
- D250S DUAL Alternator battery +

DEFINITIONS SERVICE BATTERY

Depending on the application, it could also be referred to as
- House battery
- Domestic battery
- Consumer battery

CONNECTIONS

- Electrical equipment
- Battery bank
- D250S DUAL Service battery +

DEFINITIONS CONSUMERS

Depending on the application, it could also be referred to as
- Electrical equipment +

CONNECTIONS

- Electrical equipment

SMARTPASS LAMPS

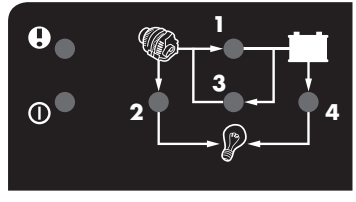

Error lamp

Power lamp

1. Service battery charging lamp
2. Alternator battery consumption lamp
3. Alternator battery charging lamp
4. Service battery consumption lamp

EN

SMARTPASS LAMP FUNCTION

	LAMP	STEADY	FLASHING
①	Power lamp	Unit ready to use	
2	Alternator battery consumption lamp	Engine running	Too high current through relay
1	Service battery charging lamp	Charging Service battery	
4	Service battery consumption lamp	Consumers powered by Service battery	Too high current through relay
3	Alternator battery charging lamp	Alternator battery maintained by Service battery	Too high current through relay
❗	Error lamp	Indicates that an error has occurred. See the table to the right.	

SMARTPASS LAMP INDICATION DURING NORMAL OPERATION

①	2	1	4	3	EXPLANATION
●	●	●	●		High current from alternator to service battery. Consumer powered by alternator
●	●	●			Reduced current from alternator to service battery. Consumer powered by alternator
●	●				Consumer powered by alternator. Battery charged by D250S DUAL charger
●				●	Pulse maintenance of starter battery

SMARTPASS LAMP ERROR INDICATION

● Steady lamp ☀ Flashing lamp

⏻	2	1	4	3	❗	EXPLANATION	RECOMMENDATION
		☀	☀	☀	●	Service battery overheated	Check condition and/or installation
		☀			●	Too high current through or temperature at internal relay. Too high Service battery charge current.	Check service battery. Reduce alternator size or add one more D250S DUAL in parallel. Service battery bank too deeply discharged.
	☀				●	Too high current through or temperature at internal relay. Too many consumers connected at the same time.	Consider relocation of unit. Reduce power usage.
				☀	●	Too high current through or temperature at internal relay. Too high current to starter battery.	Starter battery problems, check battery.
			☀		●	Too high current through or temperature at internal relay. Too many consumers connected.	Relocate unit or reduce concurrent use of consumers.
			☀		●	Battery watch activated. Service battery too low	Recharge Service battery

EN

INSTALLATION OF UNIT

1. Attach the temperature sensor holder on a flat surface on one Service battery. Position it as close as possible to a positive post.
2. Use the included drill template. Wiring is simplified if the units are installed according to the drill template, but other setups are possible.
3. Install the unit(s) on a surface where it can be properly fixed and where the unit is not exposed to fuels, oils or splashes of dirt.
4. Mount the unit with screws intended for the surface and attach it with one screw in each of the four holes in the corners of the unit. See picture 1. Mount the unit with M4 or ST4.2 screws. The required torque depends on the surface for mounting. Fig. 1 shows a CTEK D250S. The same procedure is used for all devices.
5. Attach the cables and mount the cable screws with a torque of 7 Nm/62 Lb-In. Use tool – hand power without tools is not enough.
6. The ground cable of the SMARTPASS should be connected to the ground screw of the DUAL or to any convinient ground connection point.

Figure 1

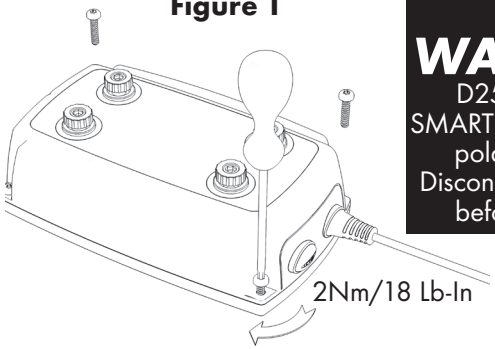

WARNING!
D250S DUAL and SMARTPASS is not reverse polarity protected. Disconnect battery poles before installation.

INSTALLATION OF CABLES

Figure 2

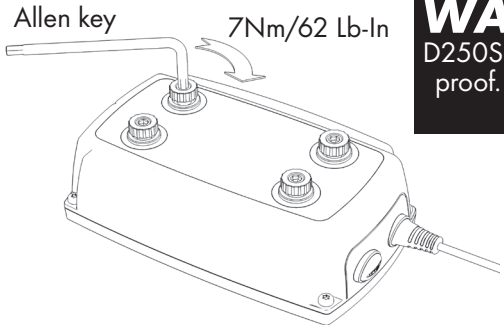

WARNING!
D250S DUAL is not spark proof. Provide for good ventilation.

DRILL TEMPLATE

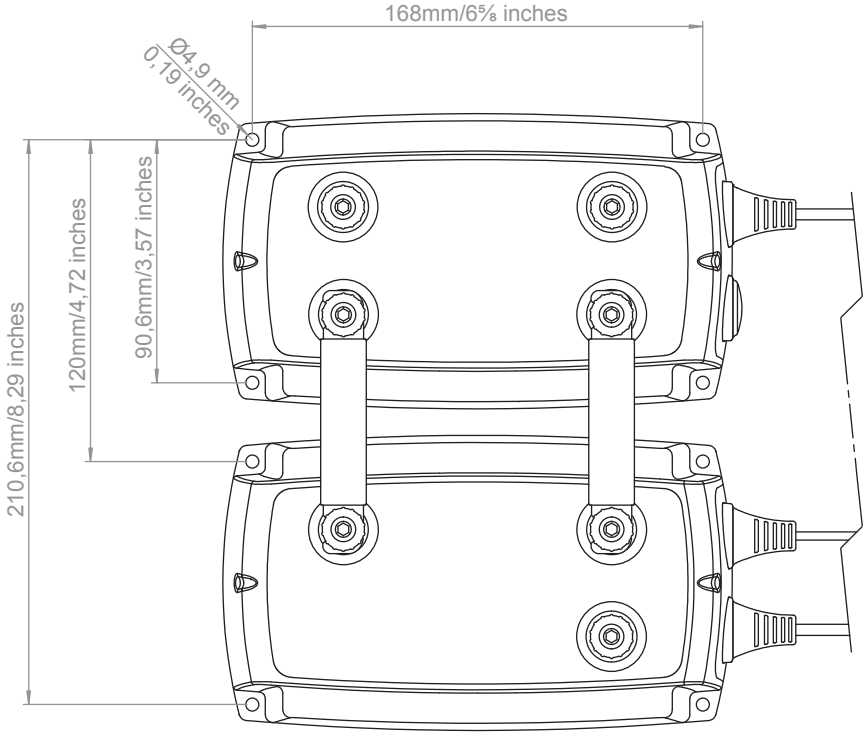

EN

SOLAR PANEL

SITUATION
Solar panel.

PROBLEM
A solar panel with 36 cells produces maximum power at about 17 V. Many regulator reduce the voltage by “burning off” energy.

SOLUTION
The D250S DUAL searches for the Maximum Power Point and charges the battery perfectly with very high efficiency.

⚠ WARNING!
D250S DUAL is not reverse polarity protected

TIP 1
Mount the temperature sensor on the Service battery.

Boat: All installation should be done in accordance with ISO10133.

⚠ WARNING!
- Max 23 V input
- Do not connect two solar panels in series

INSTALLATION SHEET 1

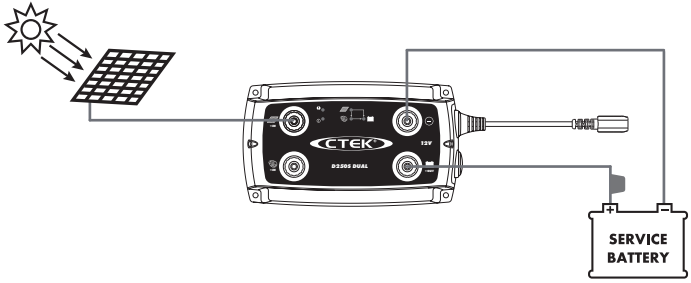

SMALL SERVICE BATTERY

SITUATION
One alternator feeding a Starter battery and a small Service battery.

PROBLEM
The Service battery will take a very long time to recharge due to low alternator voltage. Due to this, the battery will underperform and die prematurely.

SOLUTION
The D250S DUAL charges the Service battery quickly and very efficiently. The battery will be fully charged, produce more and last significantly longer.

⚠ WARNING!
D250S DUAL is not reverse polarity protected

TIP 2
Refer to Tip 1.

Alternators with voltage sensor cables should connect this on the Starter battery

Caravan/trailer: For 13-pole contact, connect D250S DUAL alternator battery + to pin #9. Connect pin #13 to D250S DUAL vehicle ground –.

⚠ WARNING!
Max 23 V input

EN

INSTALLATION SHEET 2

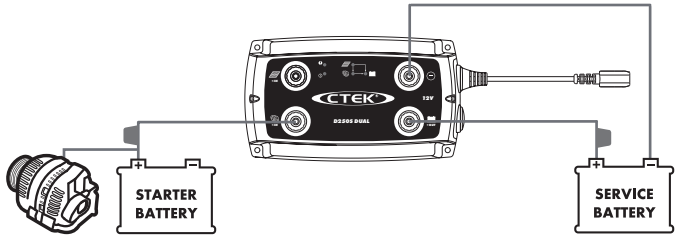

LARGE BATTERY BANK

SITUATION
One alternator feeding a Starter battery and a large Service battery bank.

PROBLEM
The Starter battery will not be fully charged and might not always be able to start the engine.

SOLUTION
The D250S DUAL recharges the Starter battery quickly to 100%, which guarantees trouble-free engine starts.

TIP 3
Mount the temperature sensor on the Starter battery.

INSTALLATION SHEET 3

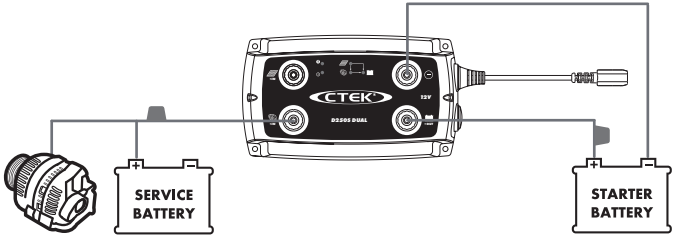

⚠ WARNING!
D250S DUAL is not reverse polarity protected

⚠ WARNING!
Max 23 V input

SOLAR PANEL

SITUATION
One alternator and a Solar panel feeding a Starter battery and a small Service battery.

PROBLEM
The Service battery will take a very long time to recharge due to low alternator voltage. The Solar panel is difficult to synchronize with the alternator. Due to these issues, the battery will underperform and die prematurely.

SOLUTION
The D250S Dual charges the Service battery quickly and very efficiently from both the Alternator and the Solar panel. The Solar panel produces at its maximum power point when the engine is off. When both the Solar panel and the Alternator are on, the Solar panel adjusts to the Alternator. The battery will be fully charged, produce more and last significantly longer.

TIP 4
See Tip 1 and Tip 2.

EN

INSTALLATION SHEET 4

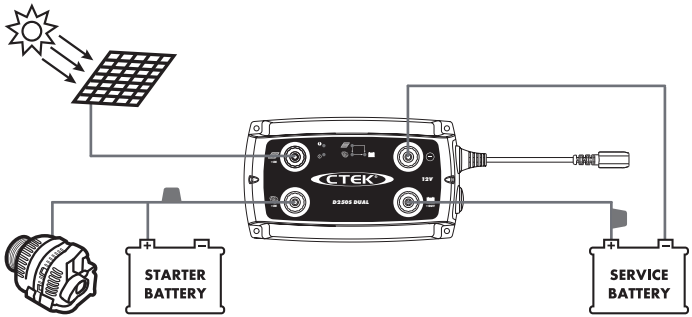

⚠ WARNING!
D250S DUAL is not reverse polarity protected

⚠ WARNING!
- Max 23 V input
- Do not connect two solar panels in series

LARGE SERVICE BATTERY

SITUATION

One alternator feeding a Starter battery and a large Service battery.

PROBLEM

The Service battery will take a very long time to recharge due to low alternator voltage and restrictions in how the alternator current is used. The Solar panel is difficult to synchronize with the alternator. Due to these issues, the battery will underperform and die prematurely.

SOLUTION

The SMARTPASS separates the two battery banks when the engine is off. With the engine on, the alternator charges the service battery with its maximum current until it has tapered off to the D250S Dual max level. Then the D250S DUAL charger finalizes the charge. The recharge time is minimized. Solar panels are easily integrated and synchronized if a D250S Dual is used together with the SMARTPASS.

TIP 5

See Tip 1, Tip 2 and Tip 4

Wires that are connected to both SMARTPASS and D250S DUAL should be connected to SMARTPASS.

INSTALLATION SHEET 5

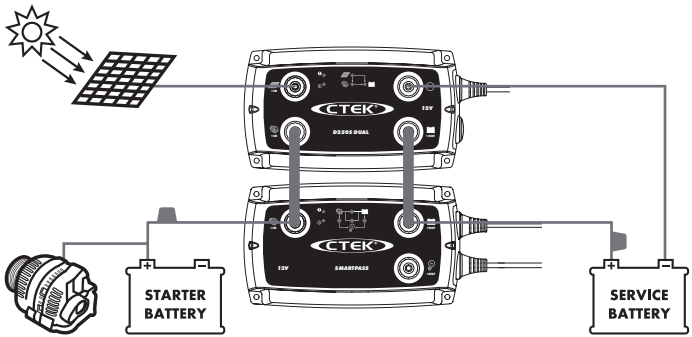

⚠ WARNING!

- Max 23 V input
- Do not connect two solar panels in series

⚠ WARNING!

D250S DUAL and SMARTPASS is not reverse polarity protected

CONNECTING AC/DC CHARGERS

SITUATION
230/110 V charger for the Service and Starter battery.

PROBLEM
The 230/110 V charger should charge both the Service and the Starter battery, and be synchronized with all other energy sources.

SOLUTION
The single output 230/110V charger is connected directly to the Service battery. The Starter battery is pulse charged through SMARTPASS.
The solar panel will also maintaince charge the Starter battery through SMARTPASS.

TIP 6
See Tip 1, Tip 2, Tip 4 and Tip 5

The battery cables of the 230/110 V charger are connected directly to the Service battery.

EN

INSTALLATION SHEET 6

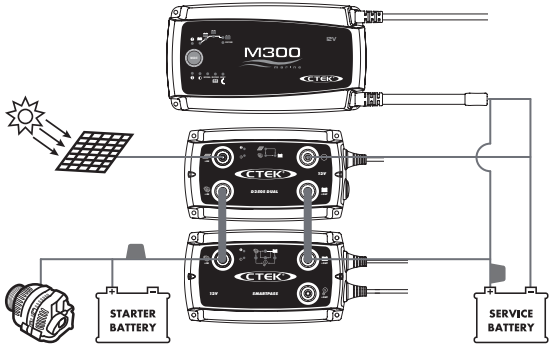

⚠ WARNING!
•Max 23 V input
•Do not connect two solar panels in series

⚠ WARNING!
D250S DUAL and SMARTPASS is not reverse polarity protected

CONNECTING CONSUMERS

SITUATION
Connection of consumers to the system.

PROBLEM
Many batteries die prematurely if they are discharged too much. Too little power might be delivered to critical consumers, like navigation, radio and emergency lights.

SOLUTION
Critical consumers are connected directly to the battery. Others, such as refrigerator, main light and heating are connected to the SMARTPASS. When the Service battery is down to a critical level, then the SMARTPASS disconnects these noncritical consumers.

TIP 7
See Tip 1, Tip 2, Tip 4, Tip 5 and Tip 6.

High current consumers (>80 A) should be connected directly to the Service or Starter battery.

INSTALLATION SHEET 7

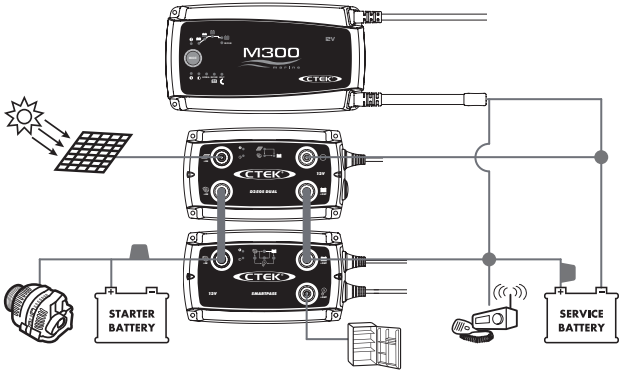

⚠ WARNING!
- Max 23 V input
- Do not connect two solar panels in series

⚠ WARNING!
D250S DUAL and SMARTPASS is not reverse polarity protected

CHARGING PROGRAM D250S DUAL

The charger starts charging the target battery when the supply voltage exceeds 13.1 V for 5 sec (engine on).
The charger stops charging the target battery when the supply voltage drops below 12.8 V for 10 sec (engine off).

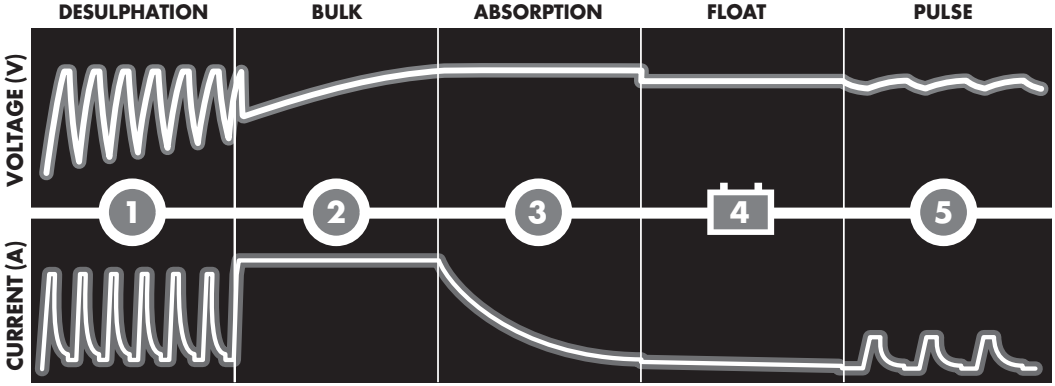

STEP 1 DESULFATION
Detects sulfated batteries. Pulsing current and voltage, removes sulfate from the lead plates of the battery restoring battery capacity.

STEP 2 BULK
Charging with maximum current until approximately 80 % battery capacity.

STEP 3 ABSORPTION
Charging with declining current to maximize up to 100 % battery capacity.

STEP 4 FLOAT
Maintaining the battery voltage at maximum level by providing a constant voltage charge.

STEP 5 PULSE
Maintaining the battery at 95–100 % capacity. The charger monitors the battery voltage and gives a pulse when necessary to keep the battery fully charged.

CABLE DIMENSIONS

Recommended minimum cable dimensions in mm²

UNIT		CABLE	MIN CABLE DIMENSIONS 0.5 m/2 ft.	1 m /3 ft.	2 m /6 ft.	5 m /15 ft.	10 m /30 ft.	FUSE RECOM-MENDATIONS
D250S/D250S DUAL		+IN	4 mm²/AWG12	4 mm²/AWG12	4 mm²/AWG12	6 mm²/AWG10	10 mm²/AWG8	30A
D250S/D250S DUAL		+OUT	4 mm²/AWG12	6 mm² /AWG10	10 mm²/AWG8			30A
D250S/D250S DUAL	SMARTPASS	Lead to ground ⊖	1.5 mm²/AWG16	1.5 mm²/AWG16	1.5 mm²/AWG16	1.5 mm²/AWG16	1.5 mm²/AWG16	
D250S/D250S DUAL	SMARTPASS	Connection Unit*	4 mm²/AWG12	6 mm²/AWG10	10 mm²/AWG8	10 mm²/AWG8	10 mm²/AWG8	
	SMARTPASS	+IN	16 mm²/AWG8	16 mm²/AWG6	16 mm²/AWG6	25 mm²/AWG4	25 mm²/AWG4	150A
	SMARTPASS	+OUT	16 mm²/AWG8	16 mm²/AWG6	16 mm²/AWG6			150A

*Use included connectors if possible. Consider above recommendation if the units are mounted at different locations.

TECHNICAL SPECIFICATIONS

Charger model	D250S DUAL	SMARTPASS
Model number	D250S Dual, 1044	SMARTPASS, 1058
Max input voltage	23 V	23 V
Charging voltage	14.4 V at 25°C/77°F temperature compensated	–
Charging current	20 A	80 A
Back current drain	Less than 1Ah/month	Less than 1Ah/month
Ripple*	Less than 4%	–
Ambient temperature	-20°C to +50°C (-4°F to -122°F), output power is reduced automatically at high temperatures	
Charger type	5-step fully automatic charging	–
Battery types	All types of 12 V lead-acid batteries (WET, MF, Ca/Ca, AGM and GEL)	
Battery capacity	40–300 Ah	28–800 Ah
Dimensions	197 x 93 x 49 mm (7¾ x 3⅝ x 2 inches) L x W x H	
Insulation class	IP65 (splash and dust proof)	
Weight	0.73 kg/1,6 lbs	0.74 kg/1,6 lbs
MPPT**	Yes	–

*) The quality of the charging voltage and charging current are very important. High current ripple heats the battery and ages the positive electrode. High voltage ripple can damage other equipment connected to batteries. The battery chargers from CTEK produce very high-quality voltage and current with low ripple

**) MPPT (Maximum Power Point Tracking) finds the best combination of supply current and voltage to maximize the power output. This is especially important for Photovoltaic (Solar) Panels and trailer campers with wiring constraints.

TEMPERATURE PROTECTION

SMARTPASS has a temperature sensor cable. The units will automatically protect the service battery if the temperature and charging voltage together are too high. Charging will then only be performed by the D250S battery charger. The temperature should be measured close to the battery, therefore attach the sensor to the battery.

LIMITED WARRANTY

CTEK SWEDEN AB, issues this limited warranty to the original purchaser of this product. This limited warranty is not transferable. The warranty applies to manufacturing faults and material defects for 2 years from the date of purchase. The customer must return the product together with the purchase receipt. This warranty is void if the battery charger has been opened, handled carelessly or repaired by anyone other than CTEK SWEDEN AB or its authorised representatives.
One of the screw holes in the bottom of the charger is sealed. Removing or damaging the seal will void the warranty.
CTEK SWEDEN AB makes no warranty other than this limited warranty and is not liable for any costs other than those mentioned above. For example, consequential damages are not covered. Moreover, CTEK SWEDEN AB is not obligated to any other warranty other than this warranty.

CTEK PRODUCTS ARE PROTECTED BY

2012-05-30

PATENTS	DESIGNS	TRADE MARKS
EP10156636.2 pending	RCD 509617	TMA 669987
US12/780968 pending	US D575225	CTM 844303
EP1618643	US D580853	CTM 372715
US7541778	US D581356	CTM 3151800
EP1744432	US D571179	TMA 823341
EP1483817 pending	RCD 321216	CTM 1025831
SE524203	RCD 000911839	CTM 405811
US7005832B2	RCD 081418	CTM 830545751 pending
EP1716626 pending	RCD 001119911-0001	CTM 1935061 pending
SE526631	RCD 001119911-0002	V28573IP00
US7638974B2	RCD 081244	CTM 2010004118 pending
EP09180286.8 pending	RCD 321198	CTM 4-2010-500516
US12/646405 pending	RCD 321197	CTM 410713
EP1483818	ZL 200830120184.0	CTM 2010/05152 pending
SE1483818	ZL 200830120183.6	CTM1042686
US7629774B2	RCD 001505138-0001	CTM 766840 pending
EP09170640.8 pending	RCD 000835541-0001	
US12/564360 pending	RCD 000835541-0002	
SE528232	D596126	
SE525604	D596125	
	RCD 001705138-0001	
	US D29/378528 pending	
	ZL 201030618223.7	
	US RE42303	
	US RE42230	

SUPPORT

For latest revised user manual and CTEKs professional customer support: www.ctek.com (EU), www.smartercharger.com (US).
By e-mail: info@ctek.se (EU), info@smartercharger.com (US).
By telephone: +46(0) 225 351 80 (EU), (330) 963-0981 (US).

20020400A