CONGRATULATIONS

to the purchase of your new professional switch mode battery charger.
This charger is included in a series of professional chargers from CTEK SWEDEN AB and represents the latest technology in battery charging.

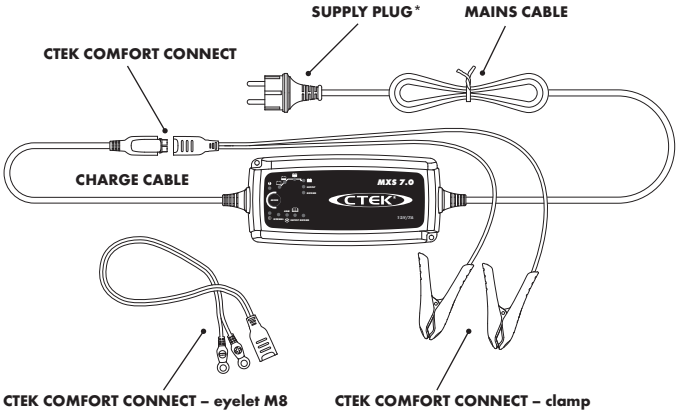

*Supply plugs may differ to suit your wall socket.

CHARGING

1. Connect the charger to the battery.
2. Connect the charger to the wall socket. The power lamp will indicate that the mains cable is connected to the wall socket. The error lamp will indicate if the battery clamps are incorrectly connected. The reverse polarity protection will ensure that the battery or charger will not be damaged.
3. Press the MODE-button to select charging program.
4. Follow the indication lamps through the charging process.
   The battery is ready to start the engine when is lit.
   The battery is fully charged when is lit.
5. Stop charging at any time by disconnecting the mains cable from the wall socket.

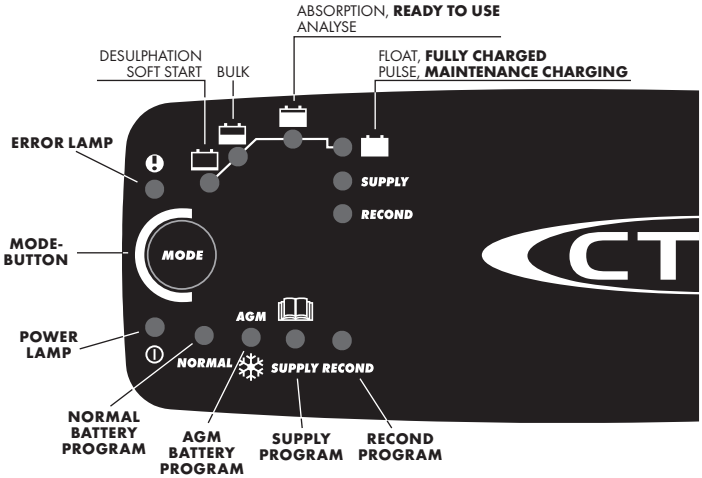

EN

CHARGING PROGRAMS

Settings are made by pressing the MODE-button. After about two seconds the charger activates the selected program. The selected program will be restarted next time the charger is connected.

The table explains the different Charging Programs:

Program	Battery Size (Ah)	Explanation	Temp range
NORMAL	14–225Ah	**Normal battery program** 14.4V/7A. Use for WET batteries, Ca/Ca, MF and for most GEL batteries	**+5°C–+50°C** (41°F–122°F)
AGM ❄	14–225Ah	**AGM battery program** 14.7V/7A Use for AGM batteries.	**-20°C–+5°C** (-4°F–41°F)
RECOND	14–225Ah	**Recond program** 15.8V/1.5A Use to return energy to the empty WET and Ca/Ca batteries. Recond your battery once per year and after deep dischare to maximise lifetime and capacity. The Recond program adds the Recond step to the **normal battery program.** Frequent use of the Recond program may cause water loss in the batteries and reduce service life of electronics. Contact your vehicle and battery supplier for advice.	**-20°C–+50°C** (-4°F–122°F)
SUPPLY	14–225Ah	**Supply program** 13.6V/7A Use as 12V power supply or use for float maintenance charging when 100% capacity of the battery is required. Supply program activates Float step without time or voltage limitation.	**-20°C–+50°C** (-4°F–122°F)

WARNING!
The spark protection on the battery charger is disabled during SUPPLY program.

ERROR LAMP

If the error lamp is lit, check the following:

1. **Is the chargers positive lead connected to the batterys positive pole?**
2. **Is the charger connected to a 12V battery?**
3. **The clamps are short circuited?**
4. **Has charging been interrupted in ▭ or ▬?**
   Restart the charger by pressing the MODE-button. If charging is still being interrupted, the battery...
   ▭ *...is seriosly sulphated and may need to be replaced.*
   ▭ *...can not accept charge and may need to be replaced.*
   ▬ *...can not keep charge and may need to be replaced.*

READY TO USE

The table shows the estimated time for empty battery to 80% charge

BATTERY SIZE (Ah)	TIME TO 80% CHARGED
20Ah	2h
50Ah	6h
100Ah	12h
150Ah	17h

20015462E MXS 7.0, Manual EU, Print file 002.indd 4 2011-10-11 07:58:02

CHARGING PROGRAM

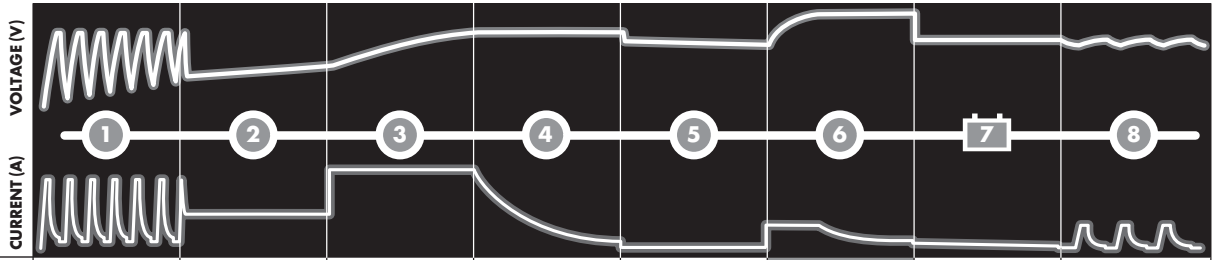

	DESULPHATION	SOFT START	BULK	ABSORPTION	ANALYSE	RECOND	FLOAT	PULSE
NORMAL	14.4V	7A until 12.6V	Increasing voltage to 14.4V @ 25°C 7A	14.4V @ 25°C Declining current	Checks if voltage drops to 12V		13.6V 7A	12.9V–14.4V 7–2A
AGM	14.7V	7A until 12.6V	Increasing voltage to 14.7V @ 25°C 7A	14.7V @ 25°C Declining current	Checks if voltage drops to 12V		13.6V 7A	12.9V–14.7V 7–2A
RECOND	14.4V	7A until 12.6V	Increasing voltage to 14.4V @ 25°C 7A	14.4V @ 25°C Declining current	Checks if voltage drops to 12V	Max 15.8V 1.5A	13.6V 7A	12.9V–14.4V 7–2A
SUPPLY							Max 13.6V 7A	
Limit:	**Max 8h**	**Max 8h**	**Max 20h**	**Max 10h**	**3 minutes**	**30 min or 4h depending on battery voltage**	**10 days *Charge cycle restarts if voltage drops****	***Charge cycle restarts if voltage drops***

**Supply program is not time or voltage limited.*

STEP 1 DESULPHATION
Detects sulphated batteries. Pulsing current and voltage, removes sulphate from the lead plates of the battery restoring the battery capacity.

STEP 2 SOFT START
Tests if the battery can accept charge. This step prevents that charging proceeds with a defect battery.

STEP 3 BULK
Charging with maximum current until approximately 80% battery capacity.

STEP 4 ABSORPTION
Charging with declining current to maximize up to 100% battery capacity.

STEP 5 ANALYSE
Tests if the battery can hold charge. Batteries that can not hold charge may need to be replaced.

STEP 6 RECOND
Choose the Recond program to add the Recond step to the charging process. During the Recond step voltage increases to create controlled gasing in the battery. Gasing mixes the battery acid and gives back energy to the battery.

STEP 7 FLOAT
Maintaining the battery voltage at maximum level by providing a constant voltage charge.

STEP 8 PULSE
Maintaining the battery at 95–100% capacity. The charger monitors the battery voltage and gives a pulse when necessary to keep the battery fully charged.

20015462E MXS 7.0, Manual EU, Print file 002.indd 5 2011-10-11 07:58:03

CONNECT AND DISCONNECT THE CHARGER TO A BATTERY

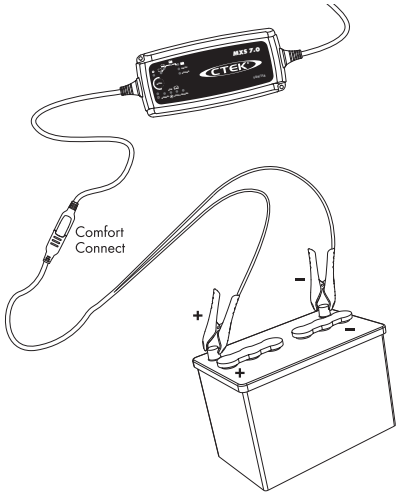

INFO
If the battery clamps are incorrectly connected, the reverse polarity protection will ensure that the battery and charger are not damaged.

For batteries mounted inside a vehicle
1. Connect the red clamp to the battery's positive pole.
2. Connect the black clamp to the vehicle chassis remote from the fuel pipe and the battery.
3. Connect the charger to the wall socket
4. Disconnect the charger from the wall socket before disconnecting the battery
5. Disconnect the black clamp before the red clamp.

Some vehicles may have positively earthed batteries.
1. Connect the black clamp to the battery's negative pole.
2. Connect the red clamp to the vehicle chassis remote from the fuel pipe and the battery.
3. Connect the charger to the wall socket
4. Disconnect the charger from the wall socket before disconnecting the battery
5. Disconnect the red clamp before the black clamp.

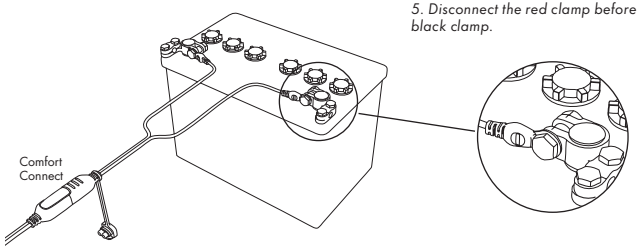

TECHNICAL SPECIFICATIONS

Charger model	MXS 7.0
Model number	1053
Rated Voltage AC	220–240VAC, 50–60Hz
Charging voltage	**NORMAL** 14.4V, **AGM** ❄ 14.7V, **RECOND** 15.8V, **SUPPLY** 13.6V
Start voltage	2.0V
Charging current	7.2A max
Current, mains	1.2A rms (at full charging current)
Back current drain*	<1Ah/month
Ripple**	<4%
Ambient temperature	-20°C to +50°C, output power is reduced automatically at high temperatures
Charger type	8-step, fully automatic charging cycle
Battery types	All types of 12V lead-acid batteries (WET, MF, Ca/Ca, AGM and GEL)
Battery capacity	14–150Ah up to 225Ah for maintenance
Dimensions	191 x 89 x 48mm (L x W x H)
Insulation class	IP65
Weight	0.8kg

*) Back current drain is the current that drains the battery if the charger is not connected to the mains. CTEK chargers has a very low back current.
**) The quality of the charging voltage and charging current is very important. A high current ripple heats up the battery which has an aging effect on the positive electrode. High voltage ripple could harm other equipment that is connected to the battery. CTEK battery chargers produce very clean voltage and current with low ripple.

20015462E MXS 7.0, Manual EU, Print file 002.indd 6 2011-10-11 07:58:04

SAFETY

- **The charger is** designed for charging 12V lead-acid batteries. Do not use the charger for any other purpose.
- **Check the charger** cables prior to use. Ensure that no cracks have occurred in the cables or in the bend protection. A charger with damaged cables must not be used. A damage cable must be replaced by a CTEK representative.
- **Never charge** a damaged battery.
- **Never charge** a frozen battery.
- **Never place** the charger on top of the battery when charging.
- **Always provide** for proper ventilation during charging.
- **Avoid covering** the charger.
- **A battery being** charged could emit explosive gasses. Prevent sparks close to the battery. When batteries are reaching the end of their lifecycle internal sparks may occur.
- **All batteries fail** sooner or later. A battery that fails during charging is normally taken care of by the chargers advanced control, but some rare errors in the battery could still exist. Don't leave any battery during charging unattended for a longer period of time.
- **Ensure that** the cabling does not jam or comes into contact with hot surfaces or sharp edges.
- **Battery acid is** corrosive. Rinse immediately with water if acid comes into contact with skin or eyes, seek immediate medical advice.
- **Always check** that the charger has switched to before leaving the charger unattended and connected for long periods. If the charger has not switched to within 45 hours, this is an indication of an error. Manually disconnect the charger.
- **Batteries consume** water during use and charging. For batteries where water can be added, the water level should be checked regularly. If the water level is low add distilled water.
- **This appliance is** not designed for use by young children or people who cannot read or understand the manual unless they are under the supervision of a responsible person to ensure that they can use the battery charger safely. Store and use the battery charger out of the reach of children, and ensure that children cannot play with the charger.
- **Connection to** the mains supply must be in accordance with the national regulations for electrical installations.

LIMITED WARRANTY

CTEK SWEDEN AB, issues this limited warranty to the original purchaser of this product. This limited warranty is not transferable. The warranty applies to manufacturing faults and material defects for 5 years from the date of purchase. The customer must return the product together with the receipt of purchase to the point of purchase. This warranty is void if the battery charger has been opened, handled carelessly or repaired by anyone other than CTEK SWEDEN AB or its authorised representatives. One of the screw holes in the bottom of the charger is sealed. Removing or damaging the seal will void the warranty. CTEK SWEDEN AB makes no warranty other than this limited warranty and is not liable for any costs other than those mentioned above, i.e. no consequential damages. Moreover, CTEK SWEDEN AB is not obligated to any warranty other than this warranty.

SUPPORT

CTEK offers a professional customer support: **www.ctek.com**.
For latest revised user manual see www.ctek.com. By e-mail: **info@ctek.se**,
by telephone: +46(0) 225 351 80, by fax +46(0) 225 351 95.
By mail: CTEK SWEDEN AB, Rostugnsvägen 3, SE-776 70 VIKMANSHYTTAN, SWEDEN.

VIKMANSHYTTAN, SWEDEN 2011-09-01

Bengt Hagander, President
CTEK SWEDEN AB

EN

20015462E MXS 7.0, Manual EU, Print file 002.indd 7 2011-10-11 07:58:05

CTEK PRODUCTS ARE PROTECTED BY

2011-09-19

Patents	Designs	Trade marks
EP10156636.2 pending	RCD 509617	CTM 669987
US12/780968 pending	US D575225	CTM 844303
EP1618643	US D580853	CTM 372715
US7541778	US D581356	CTM 3151800
EP1744432	US D571179	CTM 1461716 pending
EP1483817 pending	RCD 321216	CTM 1025831
SE524203	RCD 000911839	CTM 405811
US7005832B2	RCD 081418	CTM 830545751 pending
EP1716626 pending	RCD 001119911-0001	CTM 1475420 pending
SE526631	RCD 001119911-0002	CTM 1935061 pending
US7638974B2	RCD 081244	V28573IP00
EP1903658 pending	RCD 321198	CTM 1082141 pending
EP09180286.8 pending	RCD 321197	CTM 2010004118 pending
US12/646405 pending	ZL 200830120184.0	CTM 4-2010-500516 pending
EP1483818	ZL 200830120183.6	CTM 410713
SE1483818	RCD 001505138-0001	CTM 2010/05152 pending
US7629774B2	RCD 000835541-0001	CTM1042686
EP09170640.8 pending	RCD 000835541-0002	CTM 766840 pending
US12/564360 pending	D596126	
SE528232	D596125	
SE525604	RCD 001705138 pending	
	US D29/378528 pending	
	RCD 201030618223.7 pending	
	US RE42303	
	US RE42230	

20015462E

20015462E MXS 7.0, Manual EU, Print file 002.indd 8 2011-10-11 07:58:05