FRONT RUNNER
VEHICLE OUTFITTERS

POWER BOX BATTERY HOLDER

ENG

BBRA004

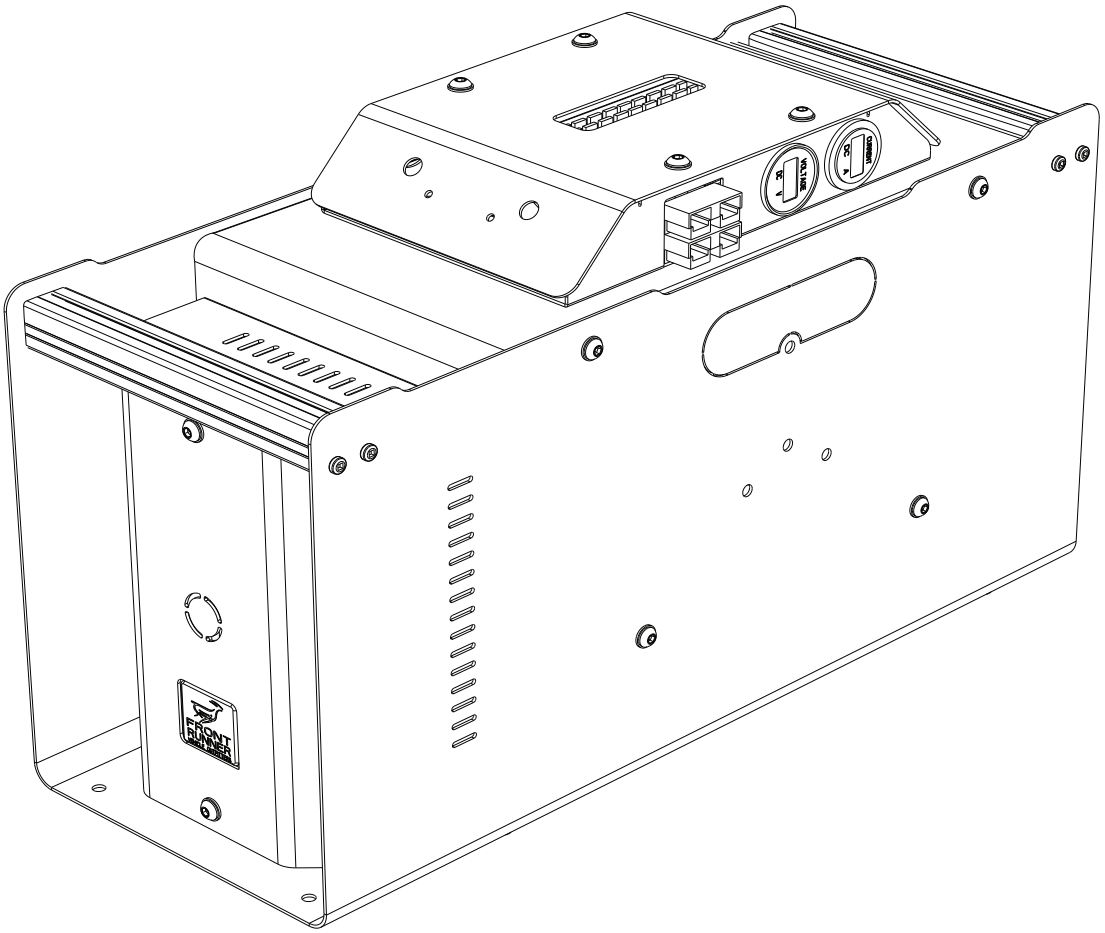

READ ME !

Thank you for purchasing a Front Runner Power Box Battery Holder.

Before you start, take a moment to familiarize yourself with the Fitting Instructions and the components received.

Refer to Page 2 for a list of all the components, quantities and tools required.

IMPORTANT WARNING!

IT IS CRITICAL THAT ALL FRONT RUNNER PRODUCTS BE PROPERLY AND SECURELY ASSEMBLED AND ATTACHED TO YOUR VEHICLE. IMPROPER ATTACHMENT COULD RESULT IN AN AUTOMOBILE ACCIDENT, AND COULD CAUSE SERIOUS BODILY INJURY OR DEATH. YOU ARE RESPONSIBLE FOR ASSEMBLING AND SECURING ALL FRONT RUNNER PRODUCTS TO YOUR VEHICLE, CHECKING THE ATTACHMENTS PRIOR TO USE, AND PERIODICALLY INSPECTING THE PRODUCTS FOR ADJUSTMENT, WEAR AND DAMAGE. THEREFORE, YOU MUST READ AND UNDERSTAND ALL OF THE INSTRUCTIONS AND PRECAUTIONS SUPPLIED WITH YOUR FRONT RUNNER PRODUCT PRIOR TO INSTALLATION OR USE. IF YOU DO NOT UNDERSTAND ALL OF THE INSTRUCTIONS AND CAUTIONS, OR IF YOU HAVE NO MECHANICAL EXPERIENCE AND ARE NOT THOROUGHLY FAMILIAR WITH THE INSTALLATION PROCEDURES, YOU SHOULD HAVE THE PRODUCT INSTALLED BY A PROFESSIONAL INSTALLER OR OTHER QUALIFIED PERSONNEL.

NOTE: Front Runner will not be responsible for any damage caused by the failure to install the product according to these instructions.

Please call us if you have any questions about the installation of this product.

© COPYRIGHT 2018 FRONT RUNNER VEHICLE OUTFITTERS

1 GET ORGANIZED

IN THE BOX

1	1 X	Battery Holder
2	1 X	Battery Clamp
3	1 X	Charger Holder Cover
4	1 X	Charger Holder
5	1 X	Battery Cover
6	1 X	Socket and Gauge Assembly
7	1 X	Socket and Gauge Cover
8	16 X	M6 x 12 Button Head Bolt
9	22 X	M6 x 12 x 1SS Flat Washer
10	4 X	M6 Nyloc Nut
11	4 X	M6 x 16 Button Head Bolt
12	4 X	M4 x 20 Cheese Head Screw
13	4 X	M4 Flat Washer
14	4 X	M4 Nyloc Nut

TOOLS NEEDED

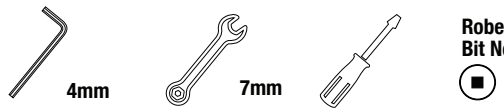

FIGURE 1.1

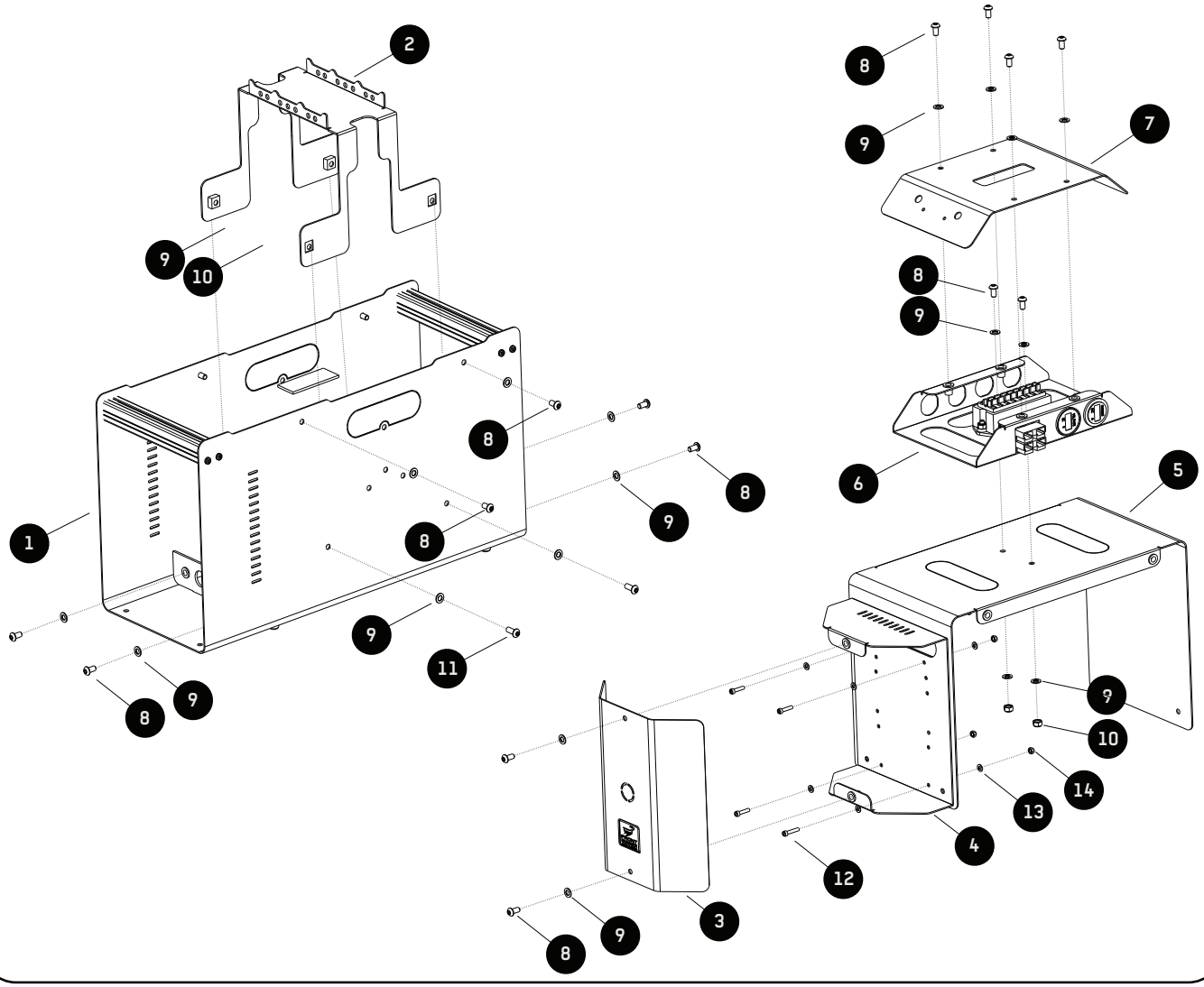

 © COPYRIGHT 2018 FRONT RUNNER VEHICLE OUTFITTERS

2 WIRING DIAGRAM

AS ALL ELECTRICAL EQUIPMENT IS A POTENTIAL HAZARD AND COULD CAUSE SERIOUS INJURY IT IS STRONGLY ADVISED THAT A QUALIFIED ELECTRICIAN HANDLE ALL WIRING AND CONNECTIONS REQUIRED.

Extend the two 4mm Positive wires (A) from the fuse box by 350mm each before attaching them to the Batteries Positive terminal. Repeat the same step for the Batteries Negative terminal wire (B).

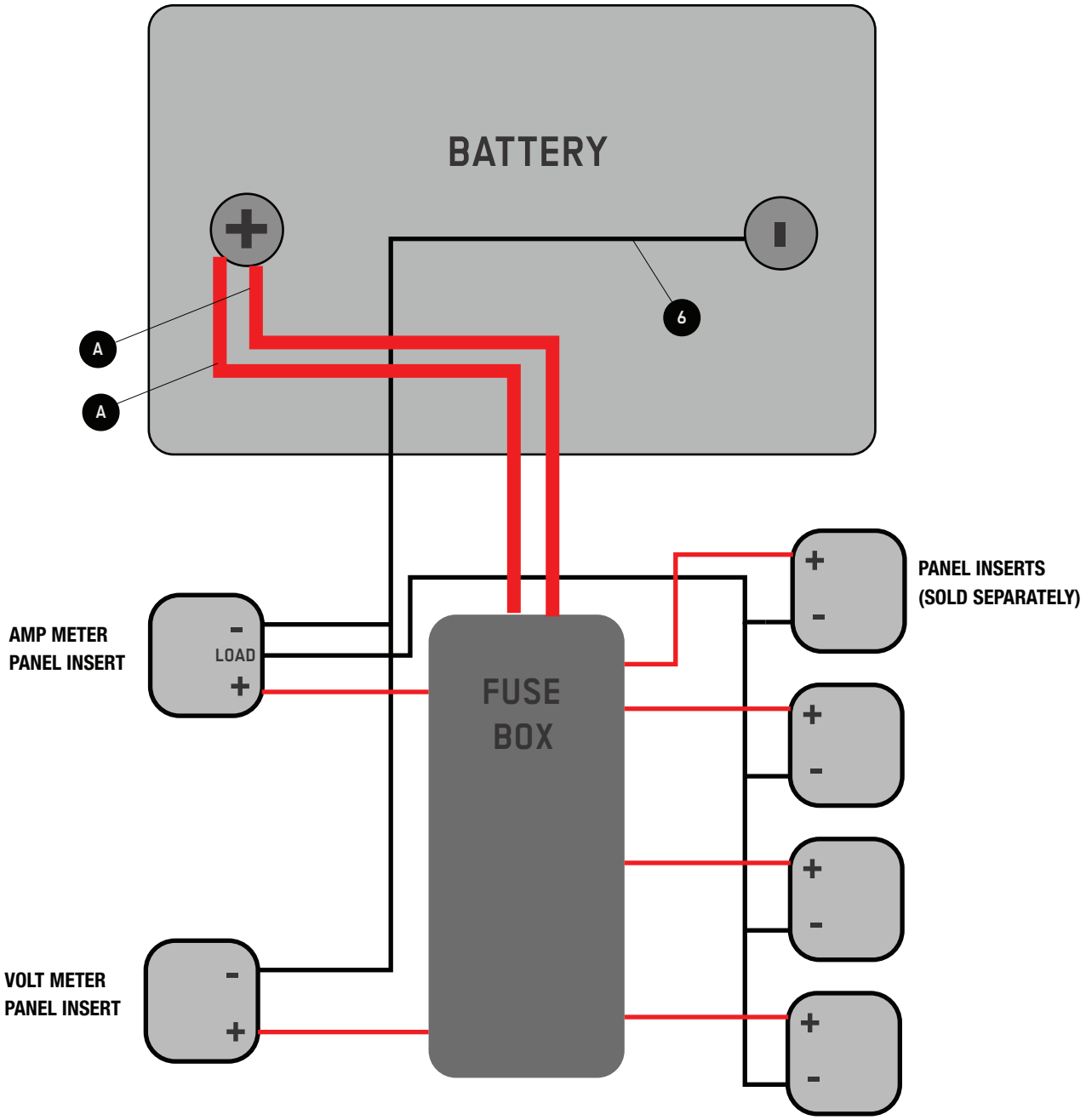

© COPYRIGHT 2018 FRONT RUNNER VEHICLE OUTFITTERS

3 PREPERATION

3.1

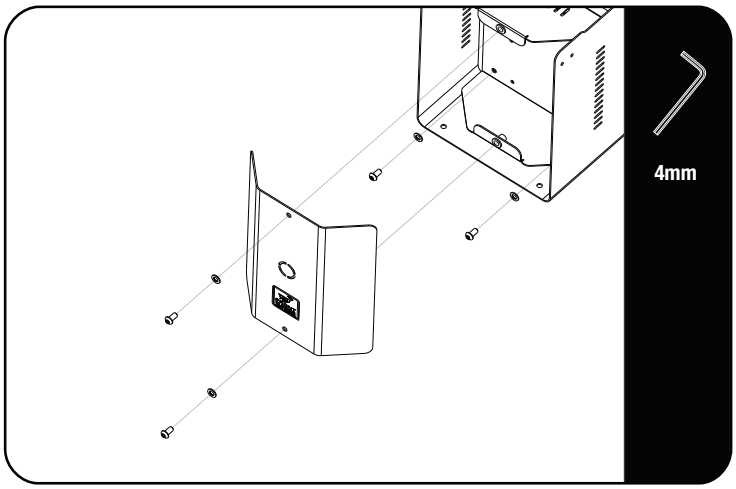

Start by disassembling the Battery Holder.

Remove the Charger Cover and Charger Holder (Items 3 & 4) as shown.

3.2

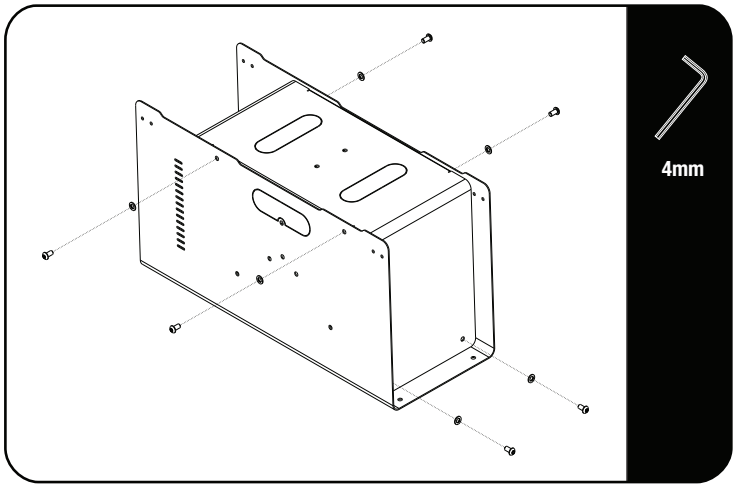

Remove the eight M6 x 12 Button Head Bolts securing the Battery Cover (Item 5).

Remove the four M6 x 16 Button Head Bolts securing the Battery Clamp (Item 2) to the Battery Holder (Item 1).

3.3

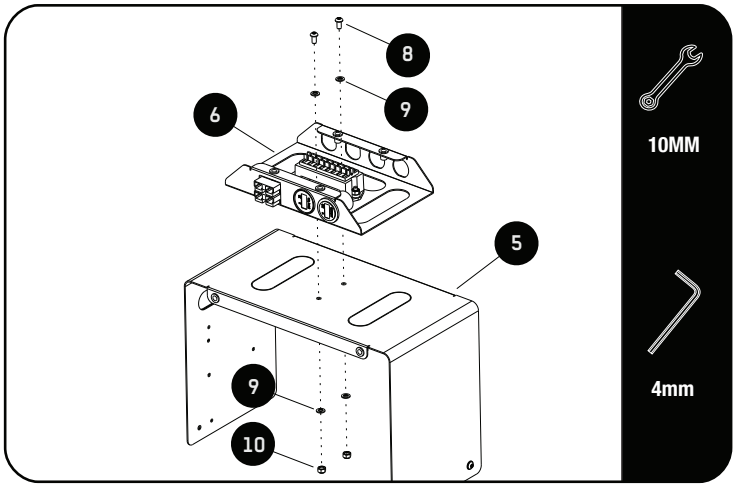

The Socket and Gauge Assembly (Item 3) can be mounted in various positions.

Step 3.3 shows the Assembly mounted on top of the Battery Holder.

Decide where you want to place the Battery Holder in your vehicle. This will determine the position and orientation of the Socket and Gauge Assembly on the Battery Holder.

Remove the Knock Out from the chosen position.

Secure the Socket and Gauge Assembly using M6 x 12 Button Heads, M6 Flat Washers and M6 Nyloc Nuts (Items 8, 9 & 10) as shown.

© COPYRIGHT 2018 FRONT RUNNER VEHICLE OUTFITTERS

3 PREPERATION

3.4

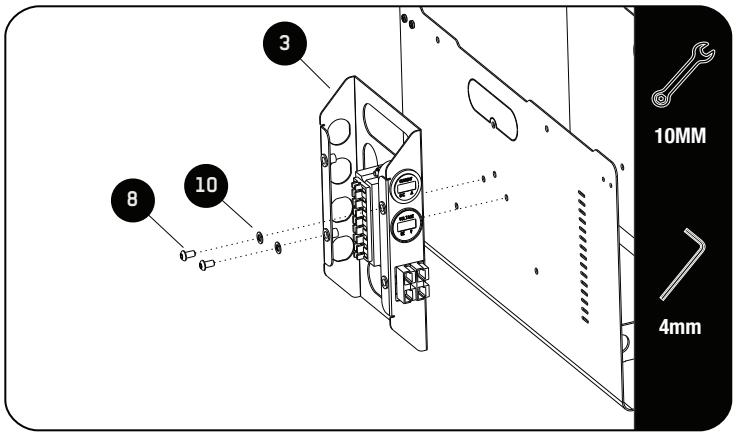

Step 3.4 shows the the Socket And Gauge Assembly mounted on the side of the Battery Holder in a vertical position.

Can be mounted on either the left or right side of the Battery Holder.

3.5

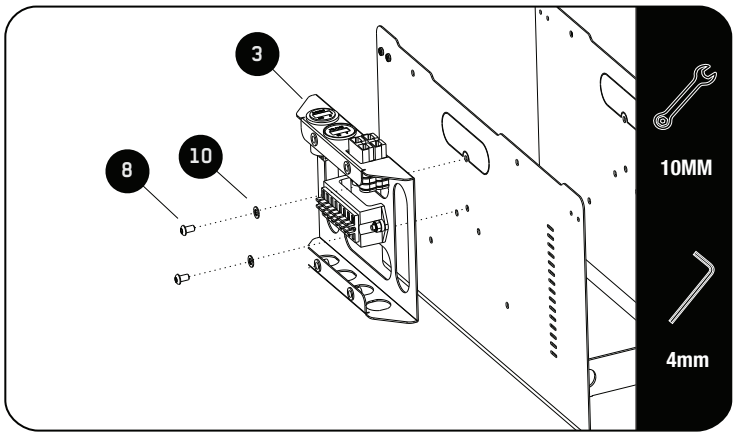

Step 3.5 shows the the Electrical Socket And Gauge Assembly mounted on the side of the Battery Holder in a horizontal position.

4 ASSEMBLY OF BATTERY CLAMP

4.1

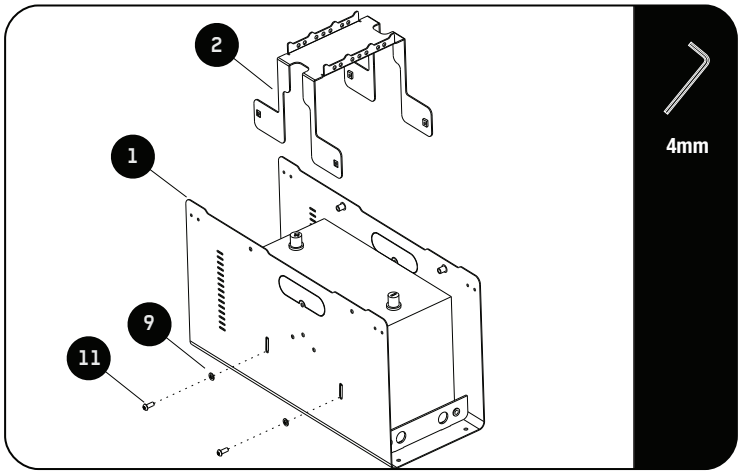

ANY WIRING AT THIS STAGE IS TO BE COMPLETED BY A QUALIFIED ELECTRICIAN.

Place your battery inside the Battery Holder (Item 1).

Lower the Battery Clamp (Item 2) over the Battery and loosely fit using four M6 x 16 Button Head Bolts and M6 Flat Washer (Items 9 & 10) as shown.

Press down on the Battery Clamp and fully tighten all the bolts.

© COPYRIGHT 2018 FRONT RUNNER VEHICLE OUTFITTERS

5 ASSEMBLY OF BATTERY CHARGER

5.1

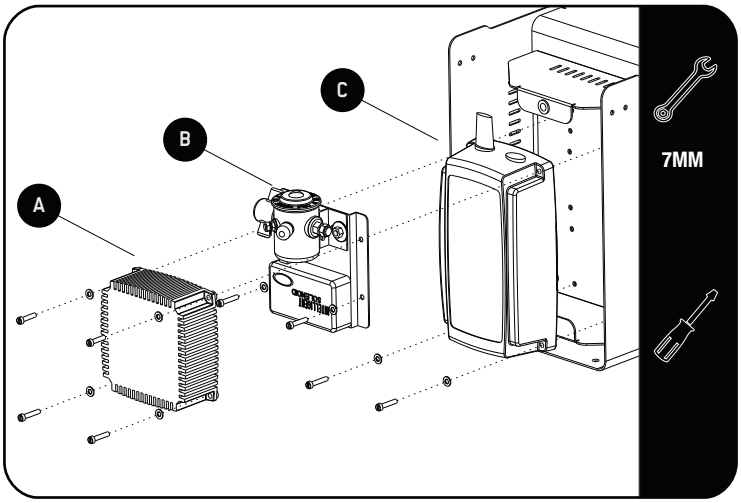

The Charger Holder can except 3 different chargers.

A. InterVOLT (DCC1225ACD)

B. National Luna Intelligent Solenoid Split Charger

C. CTEK (D250S DUAL)

Secure the chosen charger using M4 x 20 Cheese Head Screws, M4 Flat Washers and M4 Nyloc Nuts (Items 12, 13 & 14).

Route the chargers harness through the hole located at the top of the Charger Holder.

5.2

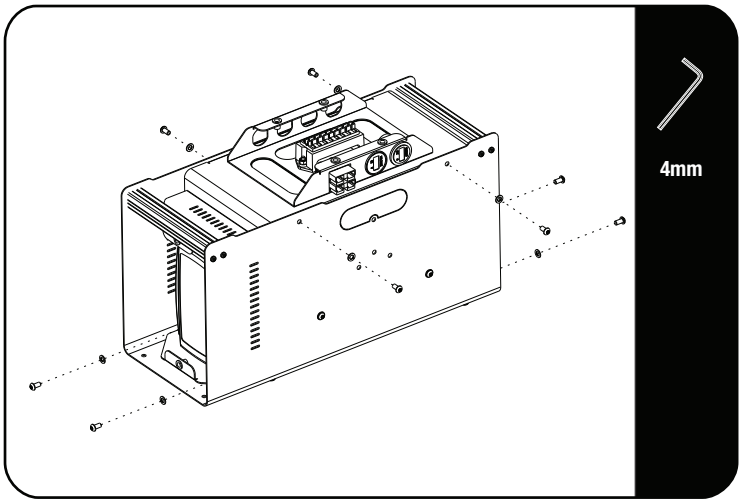

Route all the wires through the knock out hole you created in Step 3.3.

Lower the Battery Cover and Charger Holder assembly into the Battery Holder and secure using the fasteners removed in Steps 3.1 & 3.2.

5.3

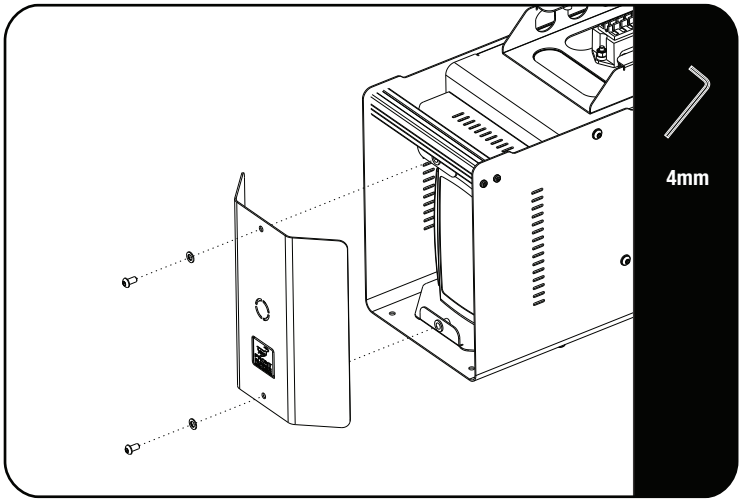

Refit the Charger Holder cover.

© COPYRIGHT 2018 FRONT RUNNER VEHICLE OUTFITTERS

6 ASSEMBLY OF BATTERY HOLDER

6.1

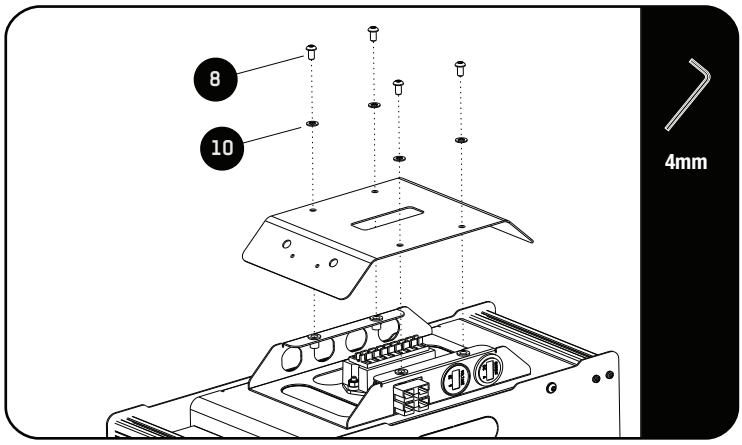

Secure the Electrical Socket And Gauge Assembly Cover using M6 x 12 Button Heads and M6 Flat Washers (Items 8 & 10) as shown.

6.2

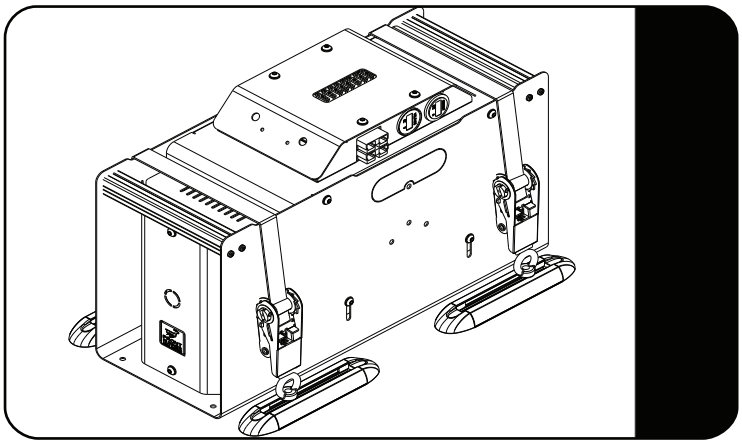

The Battery Holder can be secured in various ways. It is recommended to use a Front Runner Universal Track, Eye Nuts and Ratchet Straps. (Not Included.)

7 FITTING ELECTRICAL SOCKETS

7.1

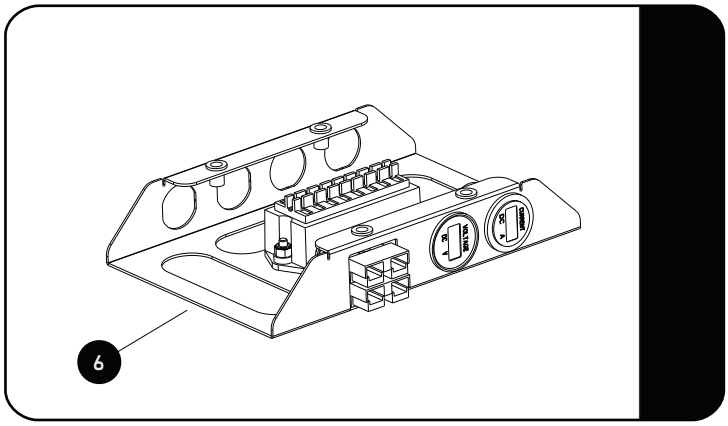

Additional electrical sockets are availible to customize your Battery Holder to your requirements.

Twist the pre cut knock outs to remove. These cut outs can then be used to fit Front Runners range of electrical sockets. (Sold Separately)

ECOM118 - USB Socket
ECOM119 - 12/24V Socket
ECOM120 - Merit Socket
ECOM121 - Engel Socket

© COPYRIGHT 2018 FRONT RUNNER VEHICLE OUTFITTERS

8 COMPLETION

8.1

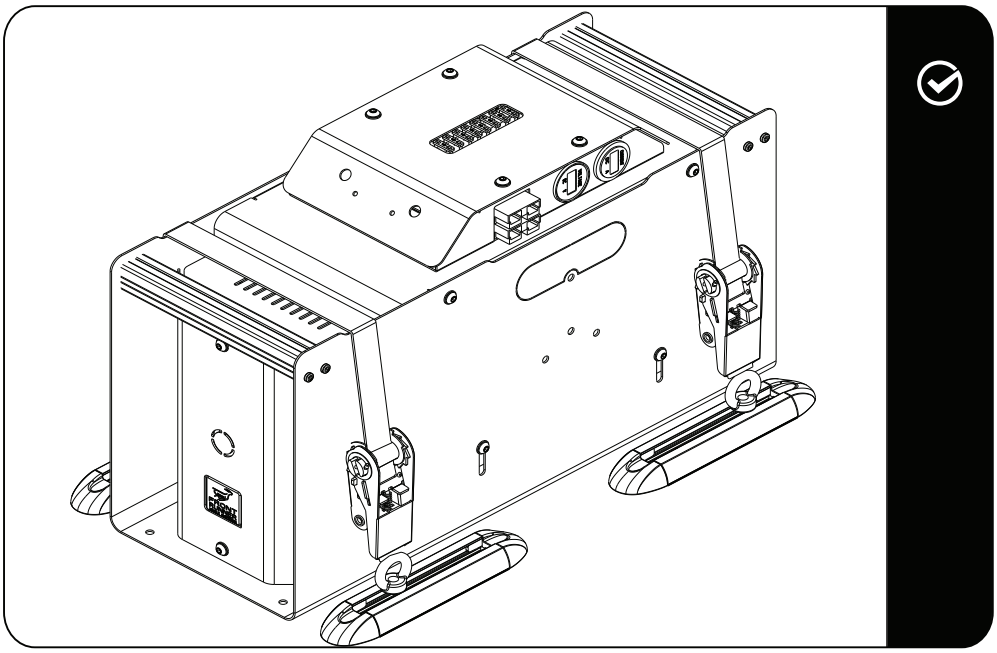

Congratulations! You did it. Take a step back and admire your work!

9 INSTALL OTHER VEHICLE AND RACK ACCESSORIES

Now's the time to visit your favorite Front Runner Dealer in person or online.

Be sure to tag us. We love to see our gear in action! #FrontRunnerOutfitters #BornToRoam

Share your adventures on:

© COPYRIGHT 2018 FRONT RUNNER VEHICLE OUTFITTERS