DELTA

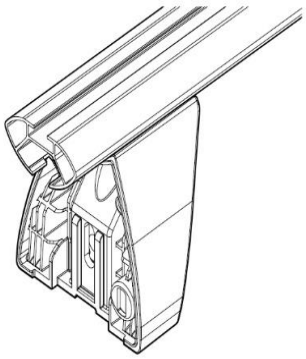

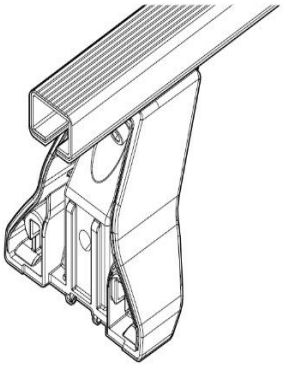

OMEGA

PAG. 6

FIXING KIT DELTA

1

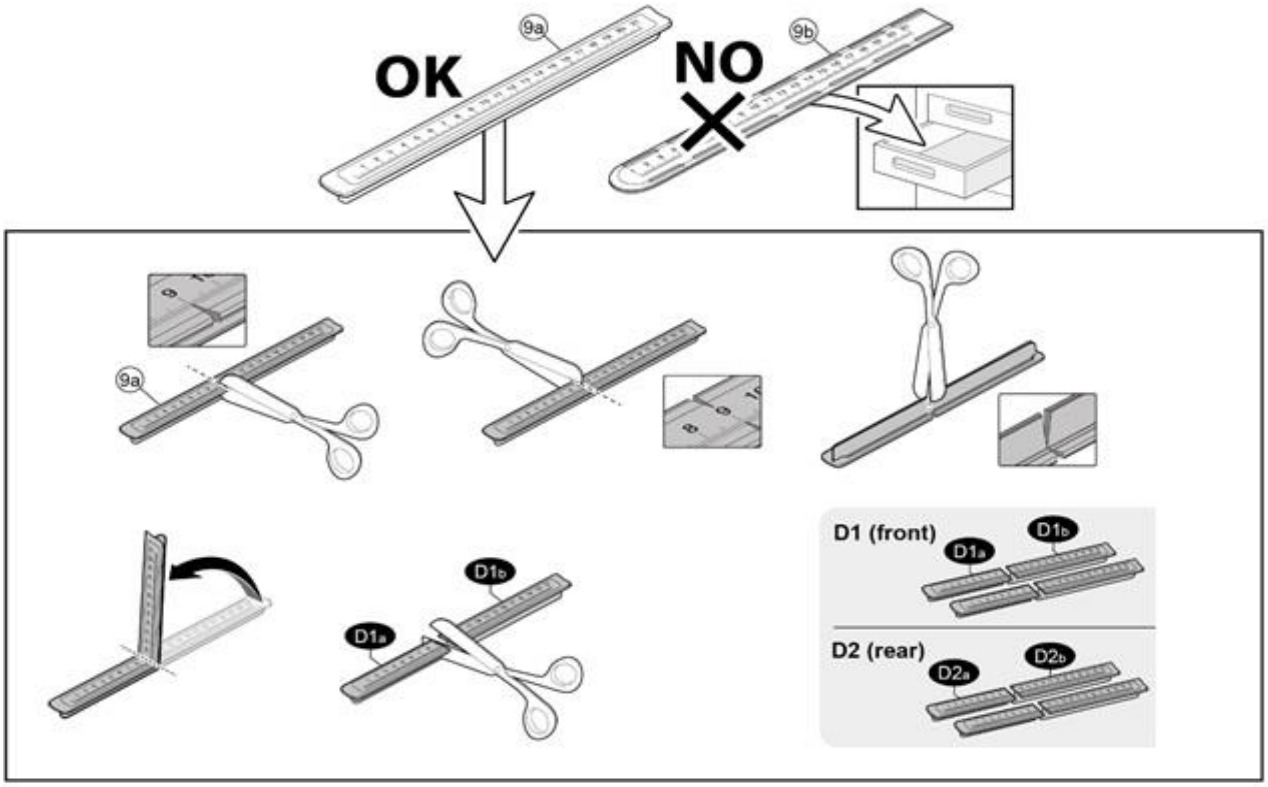

MANUFACTURER	MODEL CAR	DOORS	MODEL YEAR	D1	D2
ALFA ROMEO	*159*	*4*	*05>13*	*3,6*	*4,0*
ALFA ROMEO	*159 Sportwagon*	*5*	*06>13*	*12,4*	*11,8*
ALFA ROMEO	*Giulia*	*4*	*16>*	*12,6*	*11,5*
AUDI	*A3/S3 (8V) Sedan*	*4*	*13>19*	*13,5*	*12,2*
AUDI	*A4 (B9/8W)*	*4*	*15>19*	*5,4*	*3,6*
AUDI	*A4 (B9/8W)*	*4*	*19>*	*4,6*	*3,7*
BMW	*Serie 2 (F45) Active Tourer*	*5*	*14>*	*7,6*	*6,9*
BMW	*Serie 5 (F11) Touring*	*5*	*10>16*	*6,8*	*4,3*
CHEVROLET	*Aveo (T250) Hatchback*	*5*	*05>11*	*11,1*	*8,3*
CHEVROLET	*Cruze Hatchback*	*5*	*09>16*	*13,1*	*12,1*
CHEVROLET	*Epica*	*4*	*05>11*	*12,2*	*13,2*
CHEVROLET	*Malibu VIII*	*4*	*12>16*	*7,0*	*7,7*
FORD	*Fiesta VI*	*5*	*13>17*	*12,7*	*11,0*
FORD	*Fiesta VII*	*5*	*17>*	*13,4*	*11,8*
FORD	*Fiesta VII ST-Line*	*5*	*17>*	*13,4*	*11,8*

FORD	Mondeo III Liftback	5	07>14	7,1	7,1
FORD	Mondeo III Wagon	5	07>10	7,1	4,5
FORD	Mondeo III Wagon	5	10>14	7,1	4,5
MAZDA	Cx-60	5	22>	3,7	2,7
NISSAN	Micra / March (K12)	5	02>10	7,8	7,8
PEUGEOT	208	5	15>19	12,2	12,2
PEUGEOT	308 Station Wagon	5	14>21	5,1	3,7
SEAT	Ibiza IV	5	08>17	3,6	3,2
SEAT	Toledo	5	11>	5,0	4,0
ŠKODA	Fabia III (NJ) (No tetto in vetro / No glass sunroof)	5	15>	12,9	12,0
ŠKODA	Octavia III (5E)	4	13>	5,2	5,2
ŠKODA	Octavia IV (NX)	5	20>	5,2	5,2
ŠKODA	Rapid (NH1) Spaceback	5	13>	5,3	4,0
ŠKODA	Superb (3V)	4	15>	6,1	5,4
ŠKODA	Superb (3V) Wagon	5	15>	6,9	5,1
TOYOTA	Avensis (T270)	4	09>11	6,5	5,5
TOYOTA	Prius +	5	12>15	8,2	5,8
TOYOTA	Prius V (XW60)	4	22>	10,6	6,9

2

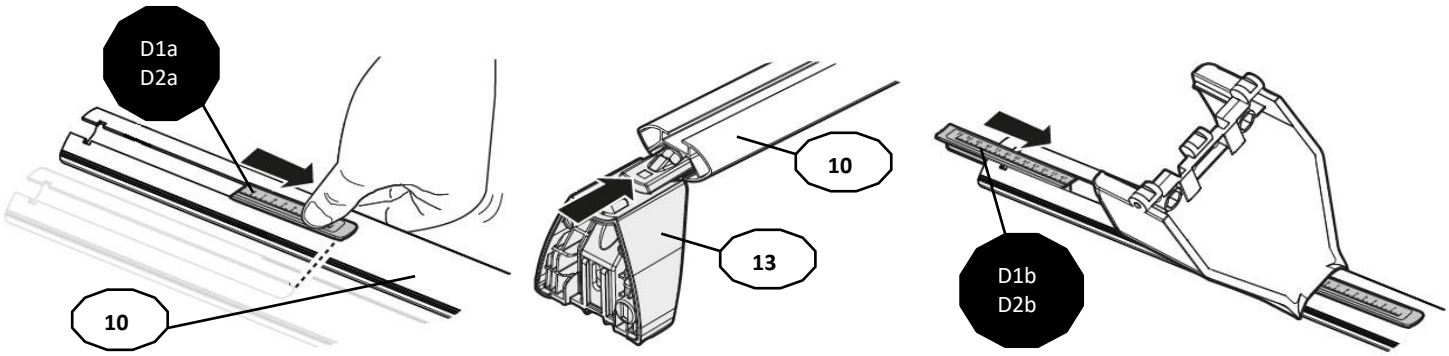

3

x4

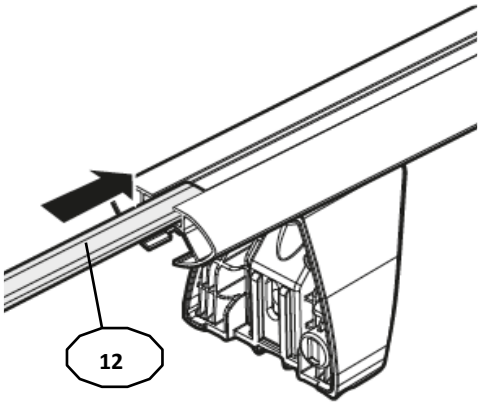

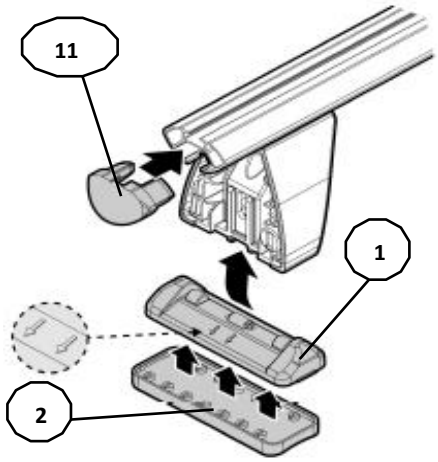

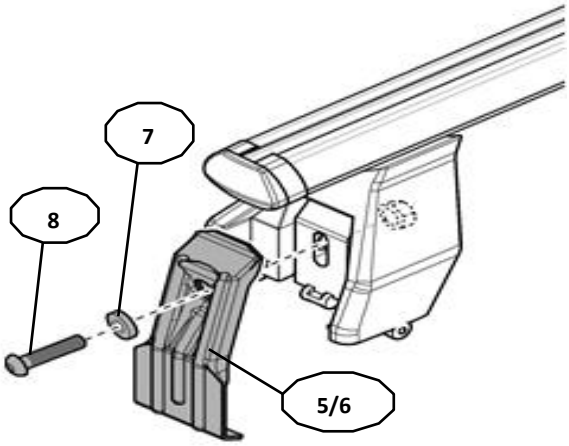

Front	Rear
5	6

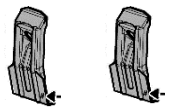

3	3R
2X	2X

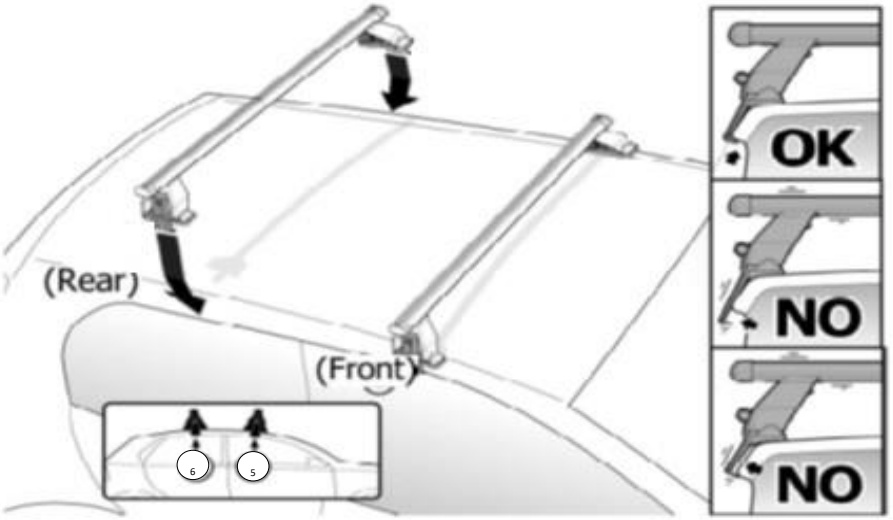

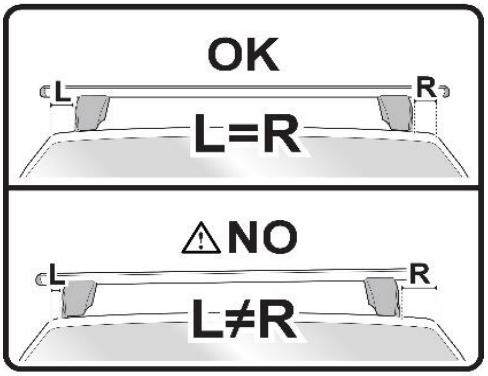

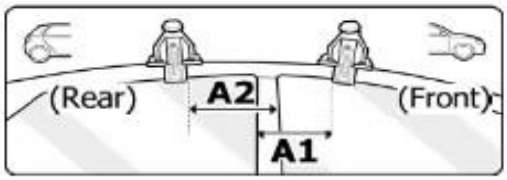

OR

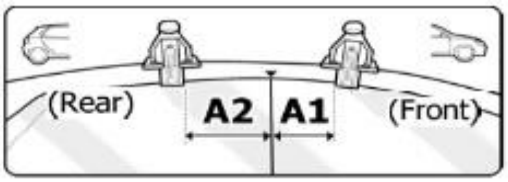

MANUFACTURER	MODEL CAR	DOORS	MODEL YEAR	A1 cm	A2 cm	A1 in	A2 in
ALFA ROMEO	*159*	*4*	*05>13*	*X*	*X*	*X*	*X*
ALFA ROMEO	*159 Sportwagon*	*5*	*06>13*	*X*	*X*	*X*	*X*
ALFA ROMEO	*Giulia*	*4*	*16>*	*X*	*X*	*X*	*X*
AUDI	*A3/S3 (8V) Sedan*	*4*	*13>19*	*X*	*X*	*X*	*X*
AUDI	*A4 (B9/8W)*	*4*	*15>19*	*X*	*X*	*X*	*X*
AUDI	*A4 (B9/8W)*	*4*	*19>*	*X*	*X*	*X*	*X*
BMW	*Serie 2 (F45) Active Tourer*	*5*	*14>*	*33*	*37*	*13,0*	*14,6*
BMW	*Serie 5 (F11) Touring*	*5*	*10>16*	*23*	*50*	*9,1*	*19,7*
CHEVROLET	*Aveo (T250) Hatchback*	*5*	*05>11*	*30*	*32*	*11,8*	*12,6*
CHEVROLET	*Cruze Hatchback*	*5*	*09>16*	*32*	*32*	*12,6*	*12,6*
CHEVROLET	*Epica*	*4*	*05>11*	*25*	*41*	*9,8*	*16,1*
CHEVROLET	*Malibu VIII*	*4*	*12>16*	*24*	*38*	*9,4*	*15,0*
FORD	*Fiesta VI*	*5*	*13>17*	*24*	*42*	*9,4*	*16,5*
FORD	*Fiesta VII*	*5*	*17>*	*24*	*42*	*9,4*	*16,5*
FORD	*Fiesta VII ST-Line*	*5*	*17>*	*24*	*42*	*9,4*	*16,5*
FORD	*Mondeo III Liftback*	*5*	*07>14*	*X*	*X*	*X*	*X*
FORD	*Mondeo III Wagon*	*5*	*07>10*	*X*	*X*	*X*	*X*
FORD	*Mondeo III Wagon*	*5*	*10>14*	*X*	*X*	*X*	*X*
MAZDA	*Cx-60*	*5*	*22>*	*15*	*51*	*5,9*	*20,1*
NISSAN	*Micra / March (K12)*	*5*	*02>10*	*24*	*30*	*9,4*	*11,8*

X = predisposizione originale /original arrangement

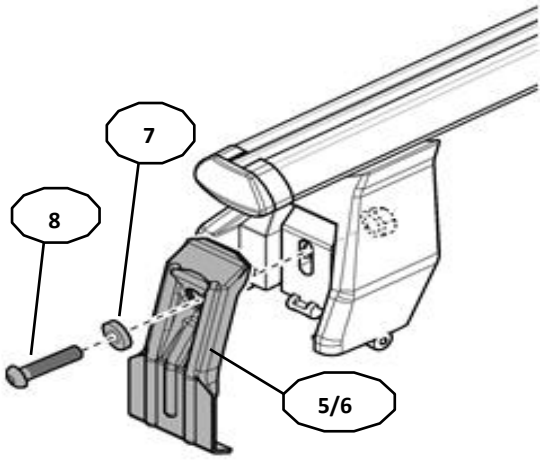

Front	Rear
5	6

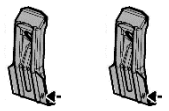

3	3R
2X	2X

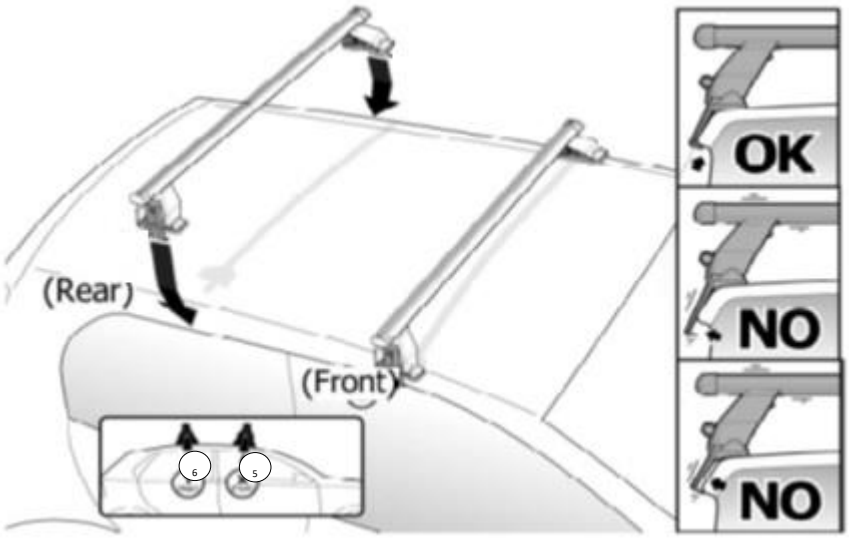

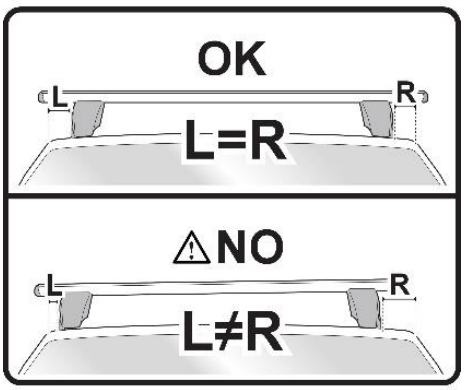

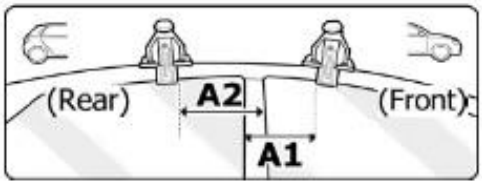

OR

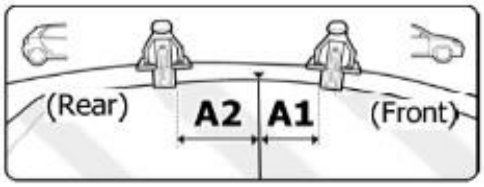

MANUFACTURER	MODEL CAR	DOORS	MODEL YEAR	A1 cm	A2 cm	A1 in	A2 in
PEUGEOT	*208*	*5*	*15>19*	*X*	*X*	*X*	*X*
PEUGEOT	*308 Station Wagon*	*5*	*14>21*	*24*	*41*	*9,4*	*16,1*
SEAT	*Ibiza IV*	*5*	*08>17*	*X*	*X*	*X*	*X*
SEAT	*Toledo*	*5*	*11>*	*X*	*X*	*X*	*X*
ŠKODA	*Fabia III (NJ) (No tetto in vetro / No glass sunroof)*	*5*	*15>*	*X*	*X*	*X*	*X*
ŠKODA	*Octavia III (5E)*	*4*	*13>*	*X*	*X*	*X*	*X*
ŠKODA	*Octavia IV (NX)*	*5*	*20>*	*X*	*X*	*X*	*X*
ŠKODA	*Rapid (NH1) Spaceback*	*5*	*13>*	*X*	*X*	*X*	*X*
ŠKODA	*Superb (3V)*	*4*	*15>*	*X*	*X*	*X*	*X*
ŠKODA	*Superb (3V) Wagon*	*5*	*15>*	*25*	*50*	*9,8*	*19,7*
TOYOTA	*Avensis (T270)*	*4*	*09>11*	*35*	*35*	*13,8*	*13,8*
TOYOTA	*Prius +*	*5*	*12>15*	*20*	*43*	*7,9*	*16,9*
TOYOTA	*Prius V (XW60)*	*4*	*22>*	*20*	*45*	*7,9*	*17,7*

4a

MANUFACTURER	MODEL CAR	DOORS	MODEL YEAR
ALFA ROMEO	Giulia	4	16>
AUDI	A3/S3 (8V) Sedan	4	13>19
AUDI	A4 (B9/8W)	4	15>19
AUDI	A4 (B9/8W)	4	19>
FORD	Mondeo III Liftback	5	07>14
FORD	Mondeo III Wagon	5	07>10
FORD	Mondeo III Wagon	5	10>14
PEUGEOT	208	5	15>19
SEAT	Ibiza IV	5	08>17
ŠKODA	Fabia III (NJ) (No tetto in vetro / No glass sunroof)	5	15>
ŠKODA	Octavia III (5E)	4	13>
ŠKODA	Rapid (NH1) Spaceback	5	13>

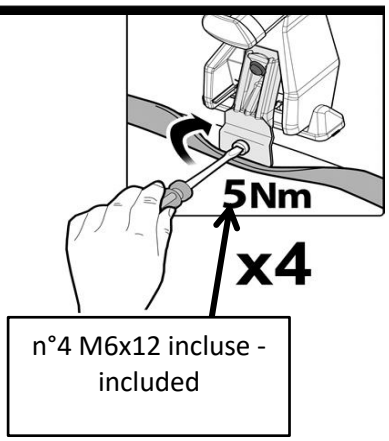

MANUFACTURER	MODEL CAR	DOORS	MODEL YEAR
ŠKODA	Superb (3V)	4	15>

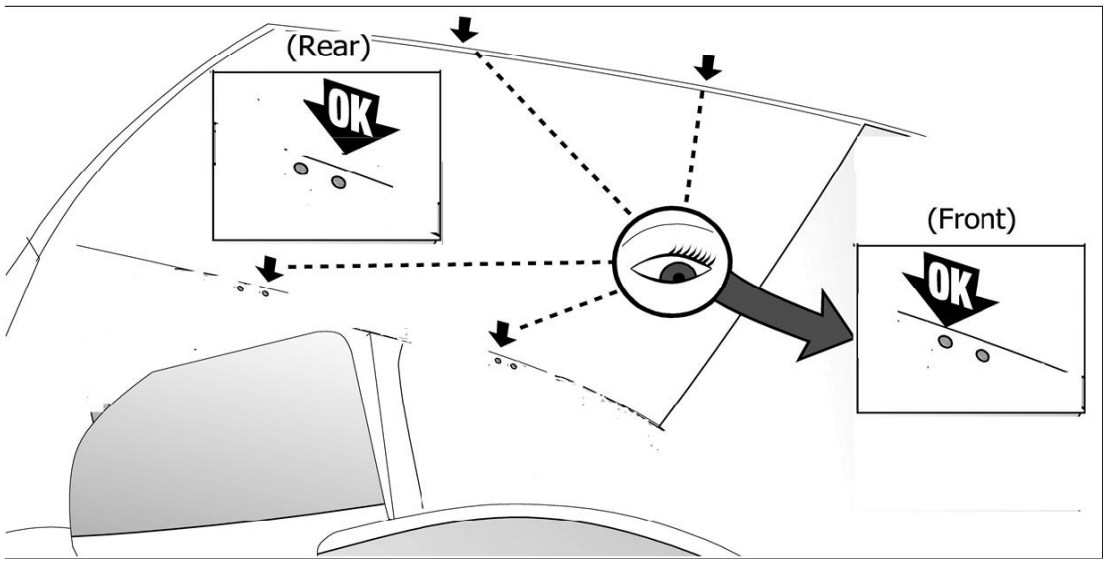

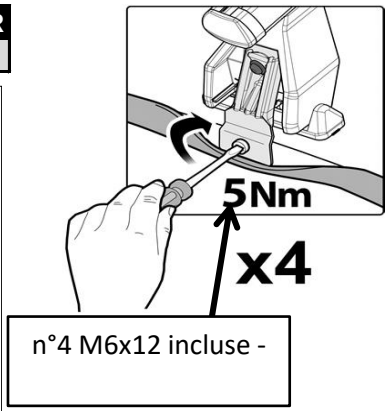

5

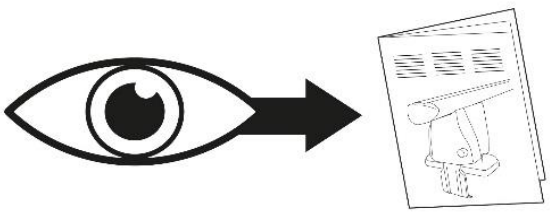

MANUAL DELTA

FIXING KIT OMEGA

2

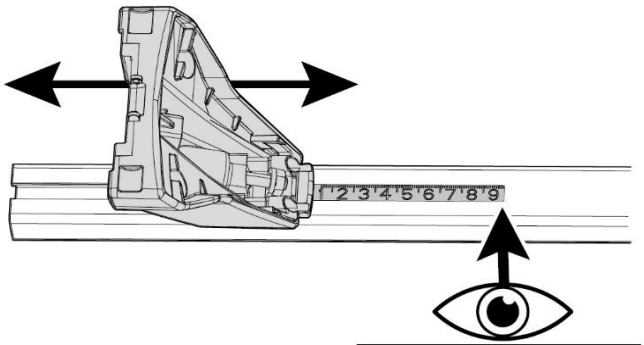

D1 (Front)	D2 (Rear)
xxx	xxx

MANUFACTURER	MODEL CAR	DOORS	MODEL YEAR	D1	D2
ALFA ROMEO	159	4	05>13	3,6	4,0
ALFA ROMEO	159 Sportwagon	5	06>13	12,4	11,8
ALFA ROMEO	Giulia	4	16>	12,6	11,5
AUDI	A3/S3 (8V) Sedan	4	13>19	13,5	12,2
AUDI	A4 (B9/8W)	4	15>19	5,4	3,6
AUDI	A4 (B9/8W)	4	19>	4,6	3,7
BMW	Serie 2 (F45) Active Tourer	5	14>	7,6	6,9
BMW	Serie 5 (F11) Touring	5	10>16	6,8	4,3
CHEVROLET	Aveo (T250) Hatchback	5	05>11	11,1	8,3
CHEVROLET	Cruze Hatchback	5	09>16	13,1	12,1
CHEVROLET	Epica	4	05>11	12,2	13,2
CHEVROLET	Malibu VIII	4	12>16	7,0	7,7
FORD	Fiesta VI	5	13>17	12,7	11,0
FORD	Fiesta VII	5	17>	13,4	11,8
FORD	Fiesta VII ST-Line	5	17>	13,4	11,8
FORD	Mondeo III Liftback	5	07>14	7,1	7,1
FORD	Mondeo III Wagon	5	07>10	7,1	4,5
FORD	Mondeo III Wagon	5	10>14	7,1	4,5
MAZDA	Cx-60	5	22>	3,7	2,7
NISSAN	Micra / March (K12)	5	02>10	7,8	7,8
PEUGEOT	208	5	15>19	12,2	12,2
PEUGEOT	308 Station Wagon	5	14>21	5,1	3,7
SEAT	Ibiza IV	5	08>17	3,6	3,2
SEAT	Toledo	5	11>	5,0	4,0
ŠKODA	Fabia III (NJ) (No tetto in vetro / No glass sunroof)	5	15>	12,9	12,0
ŠKODA	Octavia III (5E)	4	13>	5,2	5,2
ŠKODA	Octavia IV (NX)	5	20>	5,2	5,2
ŠKODA	Rapid (NH1) Spaceback	5	13>	5,3	4,0
ŠKODA	Superb (3V)	4	15>	6,1	5,4
ŠKODA	Superb (3V) Wagon	5	15>	6,9	5,1
TOYOTA	Avensis (T270)	4	09>11	6,5	5,5
TOYOTA	Prius +	5	12>15	8,2	5,8
TOYOTA	Prius V (XW60)	4	22>	10,6	6,9

3

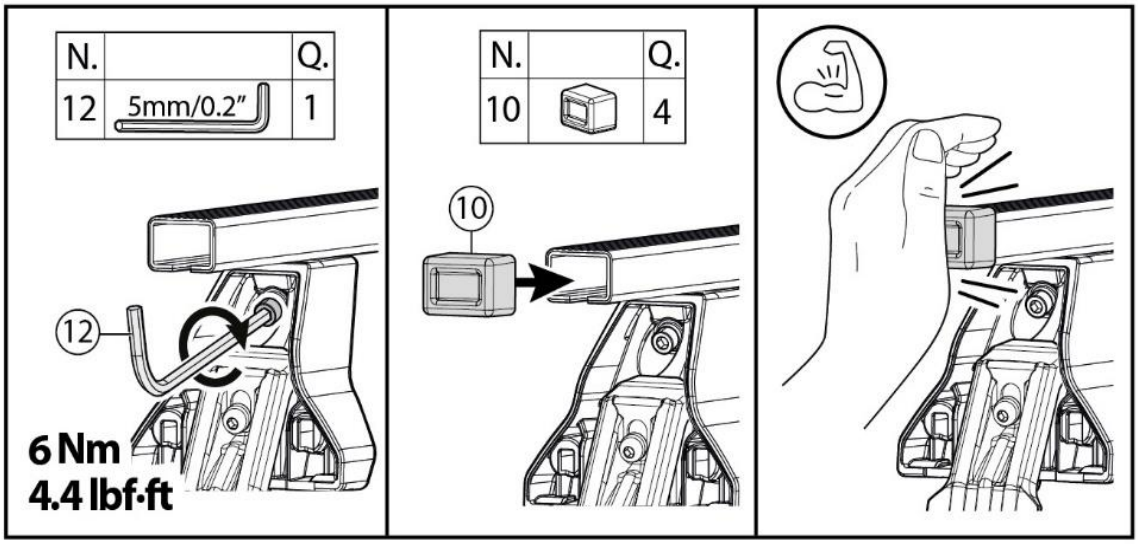

4

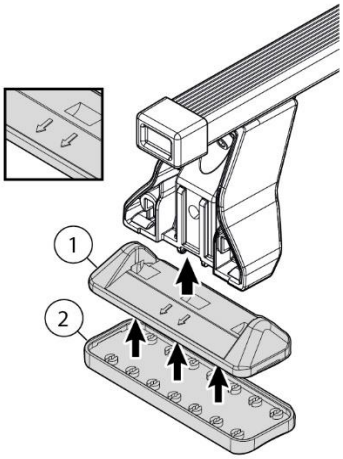

5

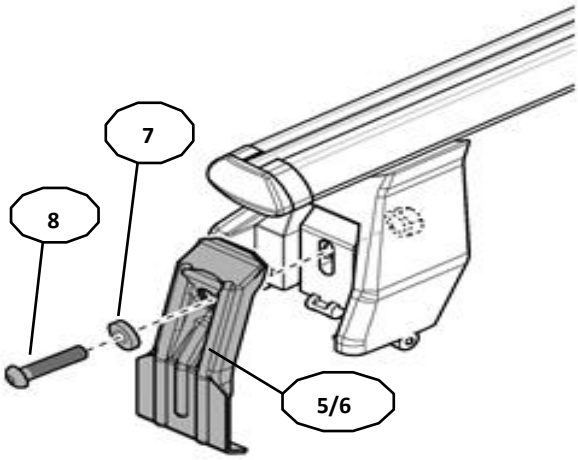

Front	Rear
5	6

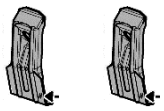

3	3R
2X	2X

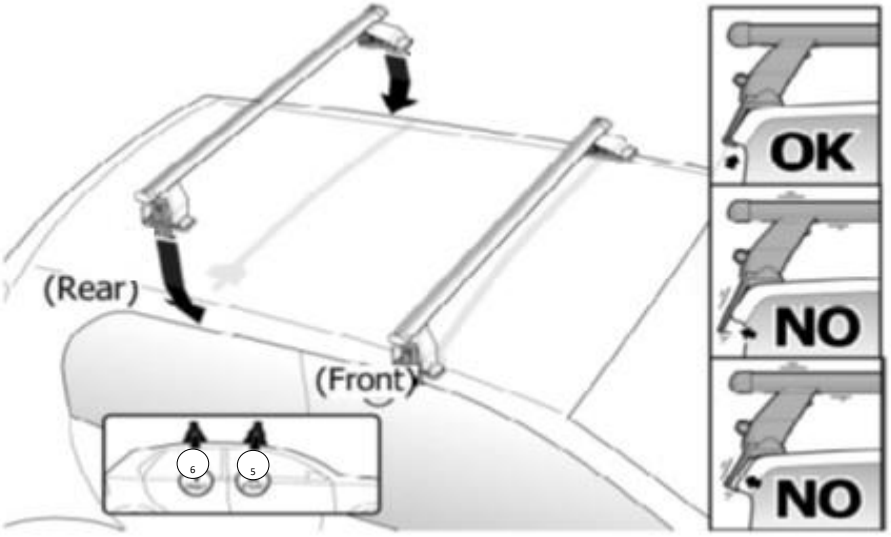

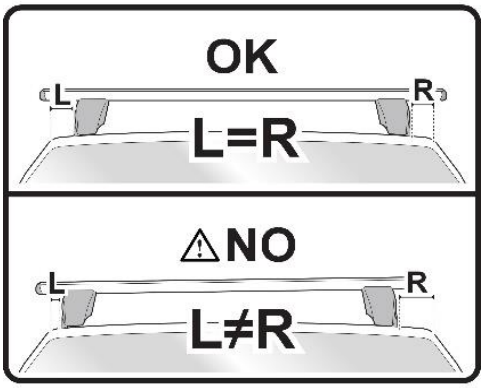

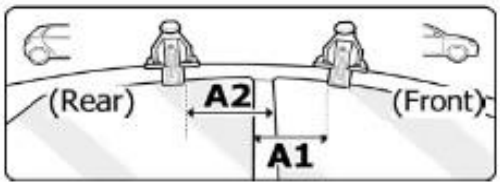

OR

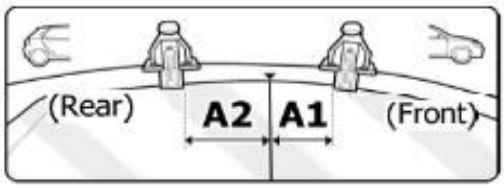

MANUFACTURER	MODEL CAR	DOORS	MODEL YEAR	A1 cm	A2 cm	A1 in	A2 in
ALFA ROMEO	159	4	05>13	X	X	X	X
ALFA ROMEO	159 Sportwagon	5	06>13	X	X	X	X
ALFA ROMEO	Giulia	4	16>	X	X	X	X
AUDI	A3/S3 (8V) Sedan	4	13>19	X	X	X	X
AUDI	A4 (B9/8W)	4	15>19	X	X	X	X
AUDI	A4 (B9/8W)	4	19>	X	X	X	X
BMW	Serie 2 (F45) Active Tourer	5	14>	33	37	13,0	14,6
BMW	Serie 5 (F11) Touring	5	10>16	23	50	9,1	19,7
CHEVROLET	Aveo (T250) Hatchback	5	05>11	30	32	11,8	12,6
CHEVROLET	Cruze Hatchback	5	09>16	32	32	12,6	12,6
CHEVROLET	Epica	4	05>11	25	41	9,8	16,1
CHEVROLET	Malibu VIII	4	12>16	24	38	9,4	15,0
FORD	Fiesta VI	5	13>17	24	42	9,4	16,5
FORD	Fiesta VII	5	17>	24	42	9,4	16,5
FORD	Fiesta VII ST-Line	5	17>	24	42	9,4	16,5
FORD	Mondeo III Liftback	5	07>14	X	X	X	X
FORD	Mondeo III Wagon	5	07>10	X	X	X	X
FORD	Mondeo III Wagon	5	10>14	X	X	X	X
MAZDA	Cx-60	5	22>	15	51	5,9	20,1
NISSAN	Micra / March (K12)	5	02>10	24	30	9,4	11,8
PEUGEOT	208	5	15>19	X	X	X	X
PEUGEOT	308 Station Wagon	5	14>21	24	41	9,4	16,1
SEAT	Ibiza IV	5	08>17	X	X	X	X
SEAT	Toledo	5	11>	X	X	X	X
ŠKODA	Fabia III (NJ) (No tetto in vetro / No glass sunroof)	5	15>	X	X	X	X
ŠKODA	Octavia III (5E)	4	13>	X	X	X	X
ŠKODA	Octavia IV (NX)	5	20>	X	X	X	X
ŠKODA	Rapid (NH1) Spaceback	5	13>	X	X	X	X
ŠKODA	Superb (3V)	4	15>	X	X	X	X
ŠKODA	Superb (3V) Wagon	5	15>	25	50	9,8	19,7
TOYOTA	Avensis (T270)	4	09>11	35	35	13,8	13,8
TOYOTA	Prius +	5	12>15	20	43	7,9	16,9
TOYOTA	Prius V (XW60)	4	22>	20	45	7,9	17,7

5

MANUFACTURER	MODEL CAR	DOORS	MODEL YEAR
ALFA ROMEO	Giulia	4	16>
AUDI	A3/S3 (8V) Sedan	4	13>19
AUDI	A4 (B9/8W)	4	15>19
AUDI	A4 (B9/8W)	4	19>
FORD	Mondeo III Liftback	5	07>14
FORD	Mondeo III Wagon	5	07>10
FORD	Mondeo III Wagon	5	10>14
PEUGEOT	208	5	15>19
SEAT	Ibiza IV	5	08>17
ŠKODA	Fabia III (NJ) (No tetto in vetro / No glass sunroof)	5	15>
ŠKODA	Octavia III (5E)	4	13>
ŠKODA	Rapid (NH1) Spaceback	5	13>
VOLKSWAGEN	Golf VII (5G)	5	12>19

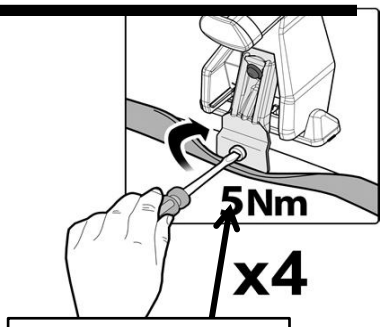

n°4 M6x12 incluse - included

MANUFACTURER	MODEL CAR	DOORS	MODEL YEAR
ŠKODA	Superb (3V)	4	15>

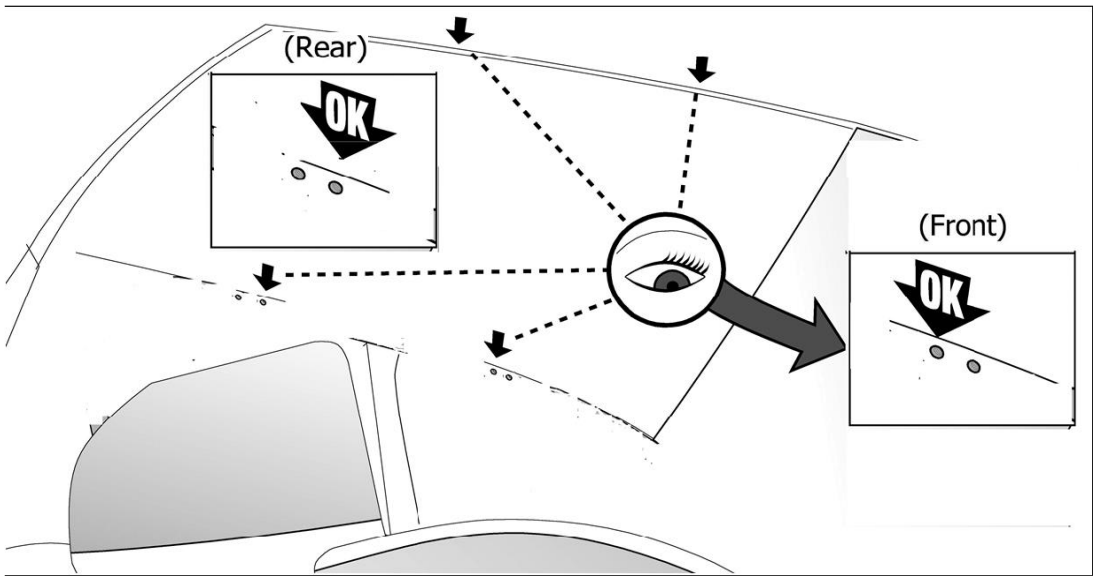

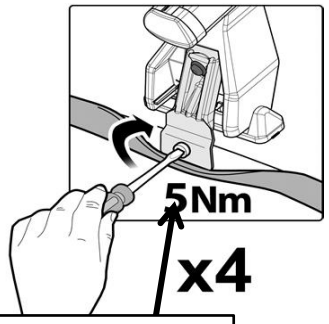

n°4 M6x12 incluse -

6

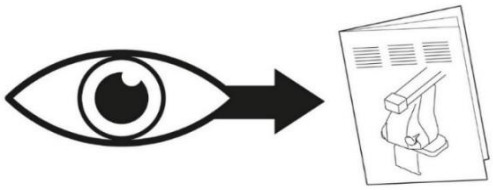

MANUAL OMEGA

NOTE: