DOMETIC
FRONT RUNNER

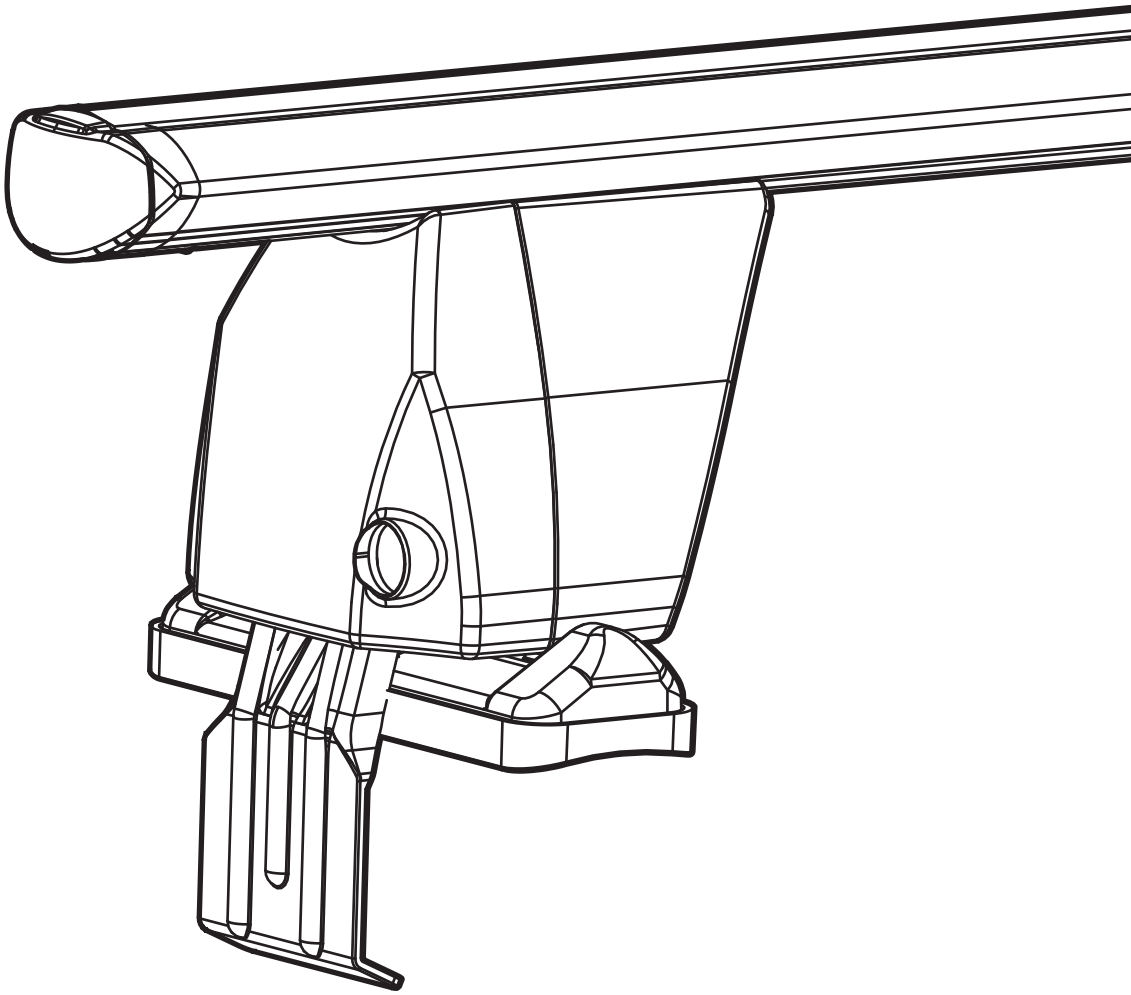

PART
A

DELTA

IT Istruzioni di montaggio
EN Fitting instructions
DE Montageanleitung
FR Instructions de montage
ES Instrucciones de montaje
BG инструкции за сглобяване
CS Návod na montáž
DA Monteringsvejledning
EL Οδηγίες συναρμολόγησης
ET Paigaldusjuhend
FI Asennusohje
HR Uputa za sastavljanje
HU A felszerelés módja
LT Pritvirtinimo instrukcijos
LV Stiprināšanas instrukcija
NL Montagehandleiding
NO Monteringsanvisning
PL Instrukcja montażu
PT Instruções de Montagem
RO Instrucțiuni de montare
RU Инструкции по установке
SK Návod na montáž
SL Navodila za pritrjevanje
SV Monteringsanvisning
TK Uydurma talimat
ZH 裝修指導
AR كتيب التعليمات

Made in Italy

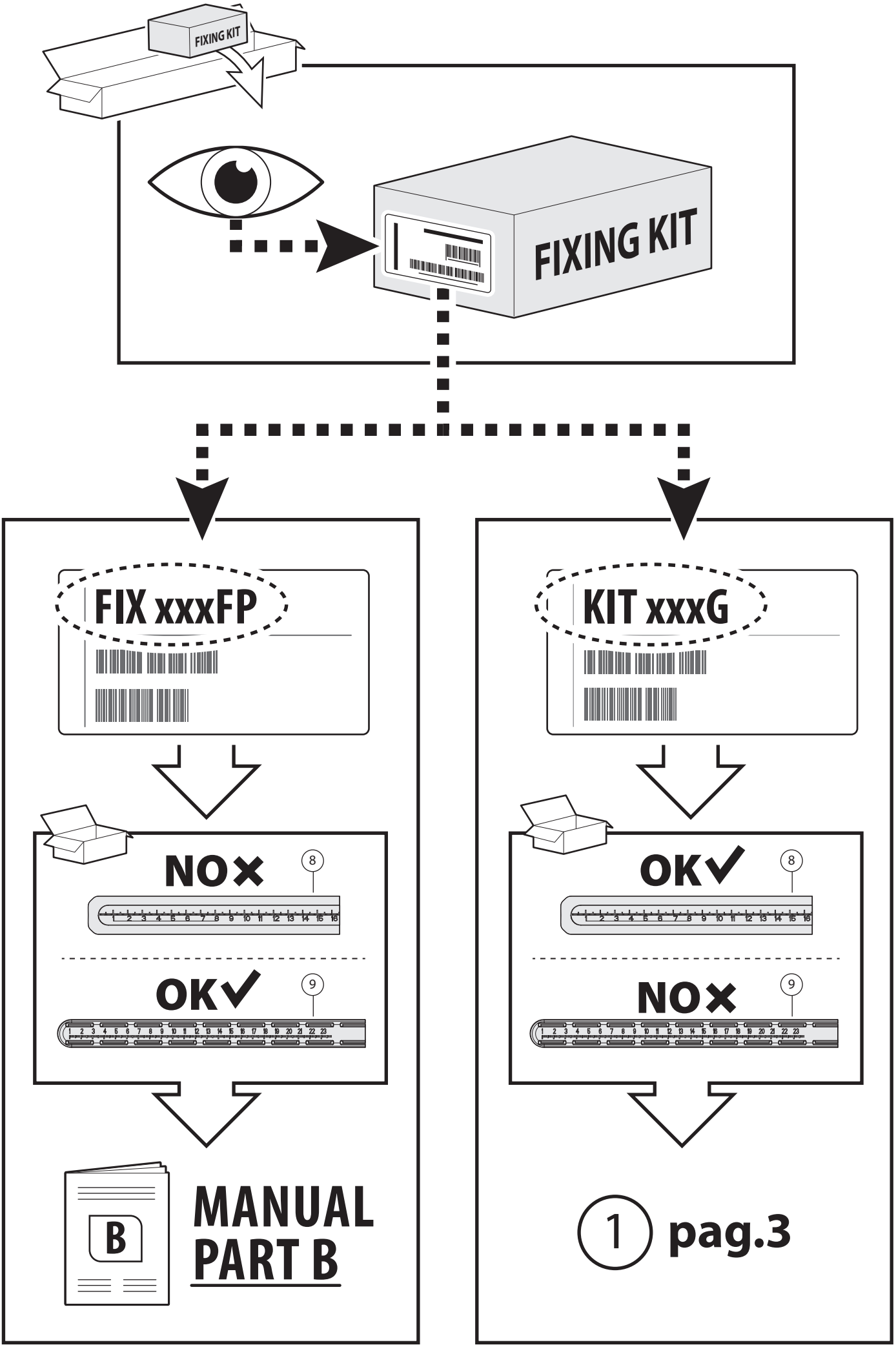
FIXING KIT
FIXING KIT
FIX xxxFP
NO✕
8
OK✓
9
B
MANUAL
PART B
KIT xxxG
OK✓
8
NO✕
9
1
pag.3

IT) Componenti (Inclusi) | EN) Components (Included) | FR) Composants (Comprises) DE) Die Komponenten (im Lieferumfang enthalten) | ES) Componentes (Incluido)

MAIN KIT

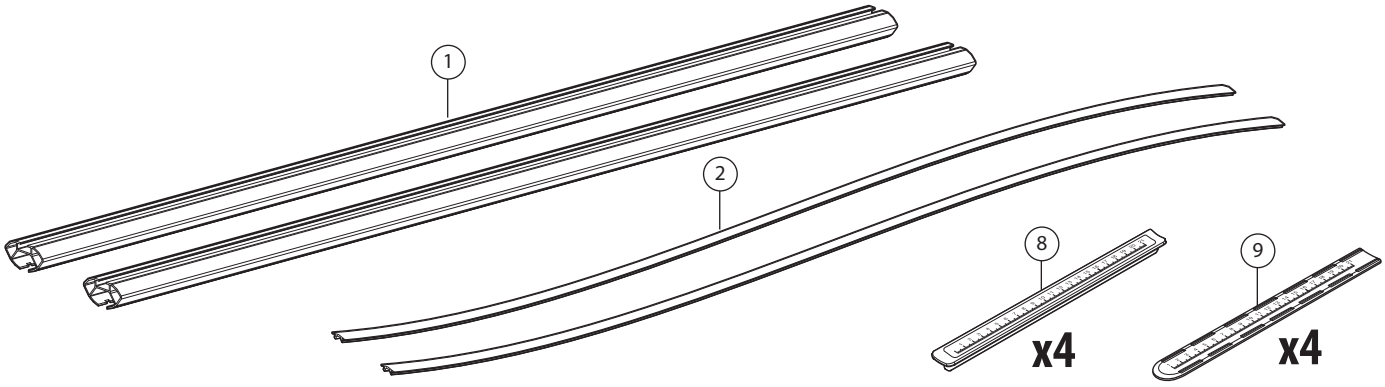

3 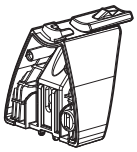 x4	4 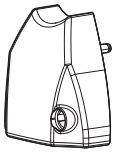 x4	5 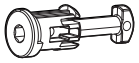 x4	6 5mm 0.2" x1	7 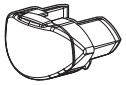 x4

FIXING KIT

12 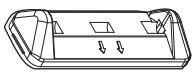 XL x2 or x4	13 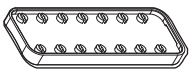 XL x2 or x4	14 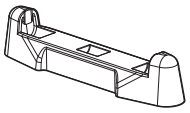 L x2 or x4	15 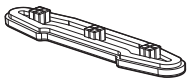 L x2 or x4
16 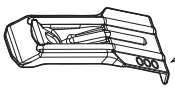 XX x2	17 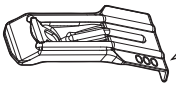 YY x2	18 Ø8x18 x4	19 M8x60 x4

OPTIONAL

kit 000084800000

10 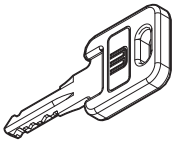 x2	11 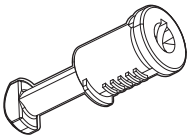 x4

1 FRONT ROOF BAR

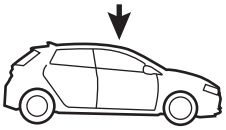

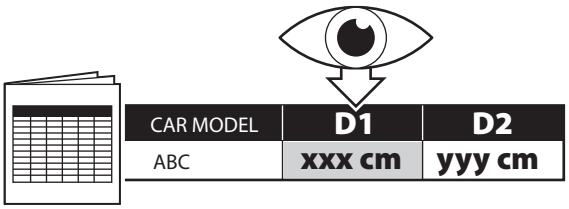

CAR MODEL	D1	D2
ABC	xxx cm	yyy cm

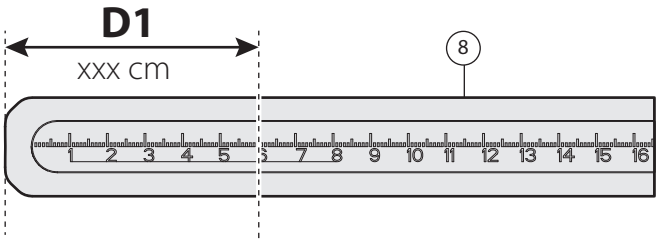

X2

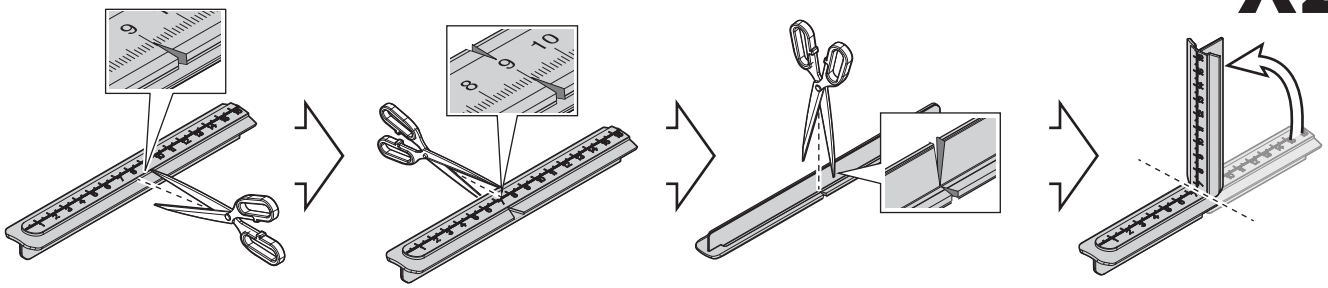

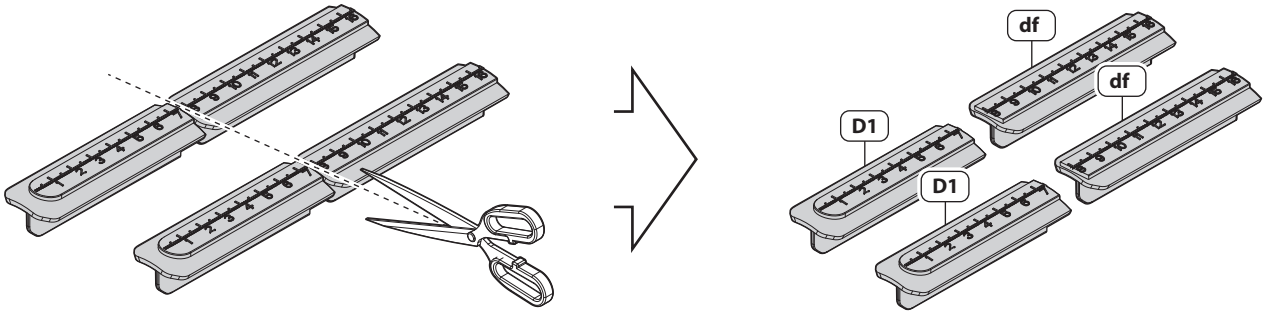

X2

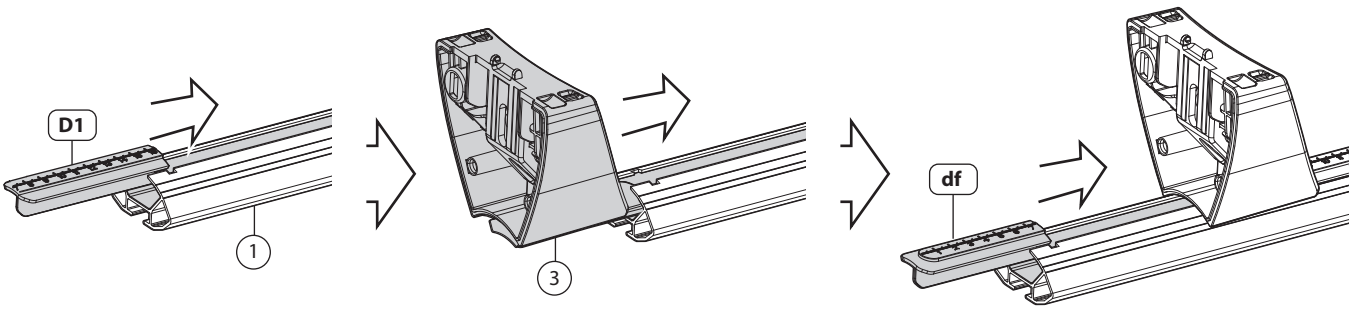

2 REAR ROOF BAR

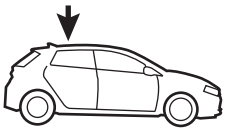

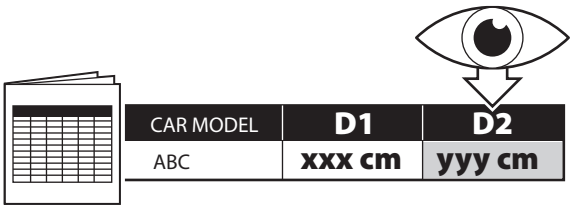

CAR MODEL	D1	D2
ABC	xxx cm	yyy cm

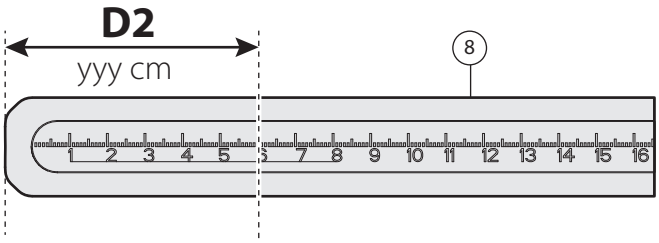

X2

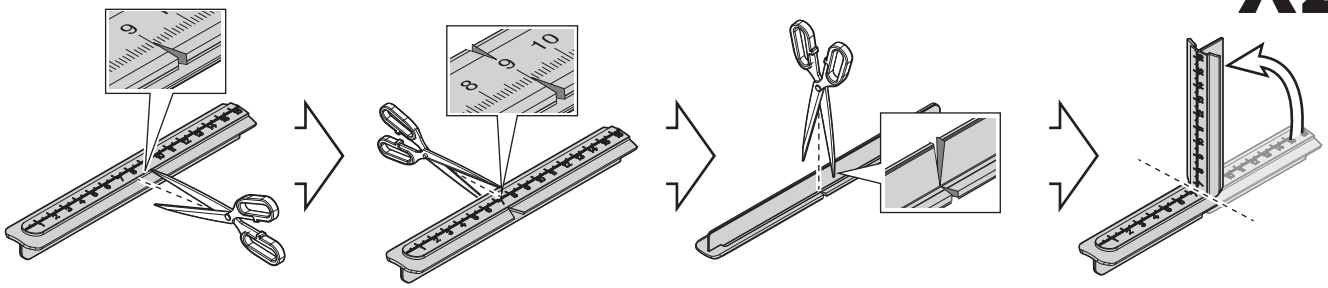

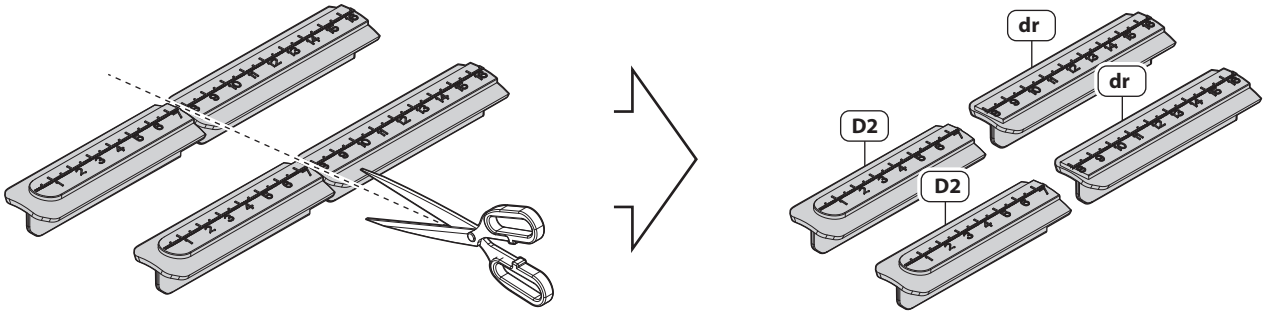

X2

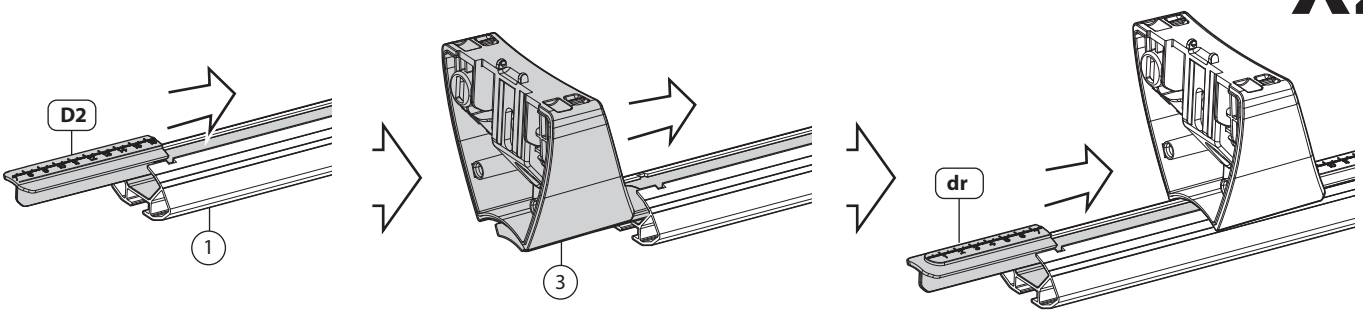

3

X2

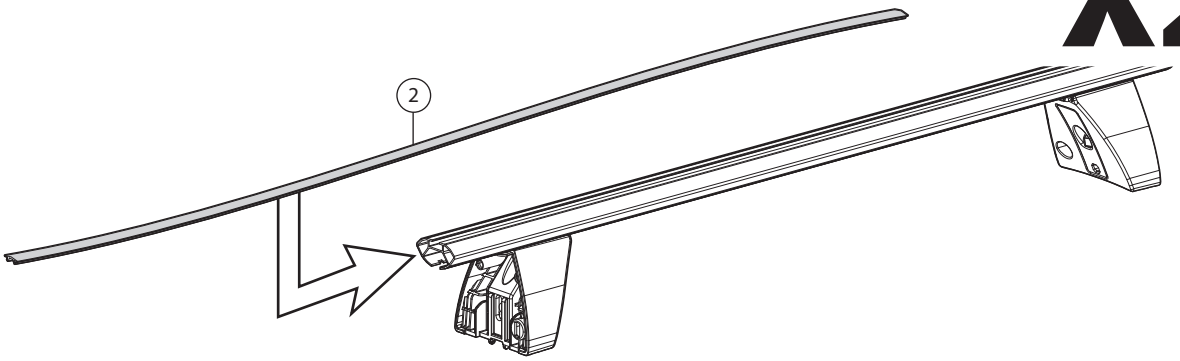

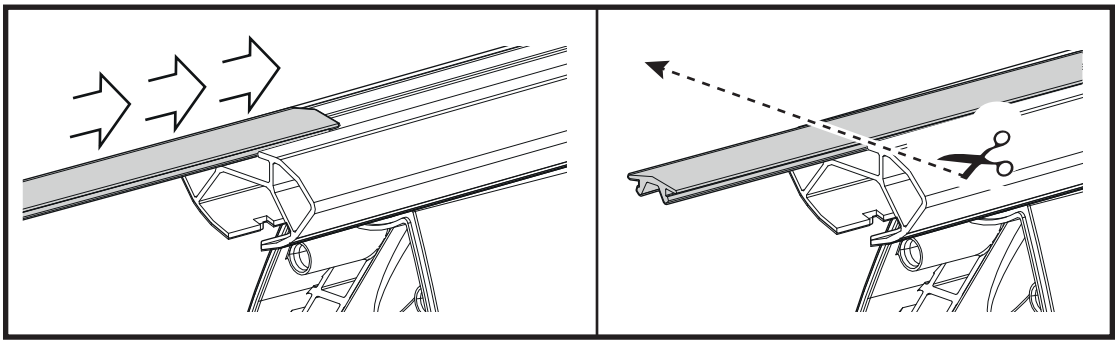

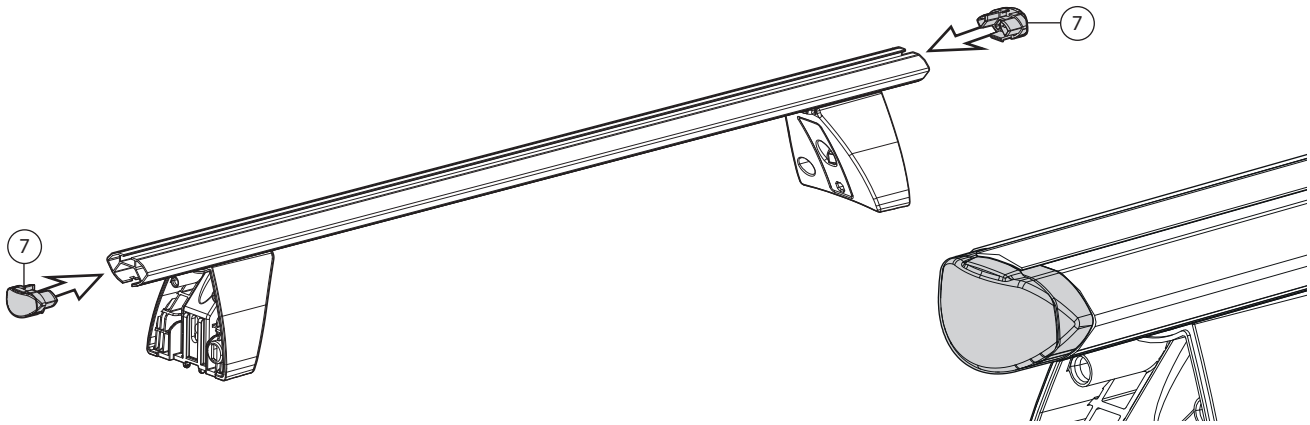

4

X4

	FRONT ROOF BAR	REAR ROOF BAR
CAR MODEL	BASE F	BASE R
ABC	L/XL	L/XL

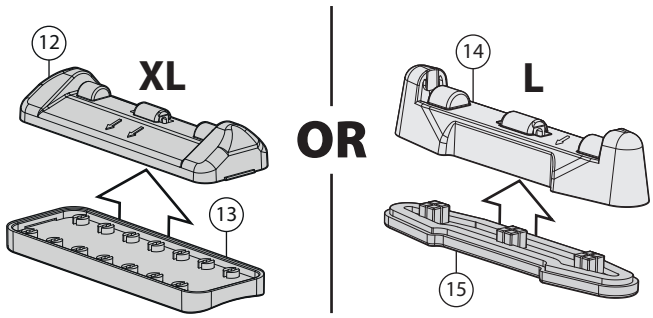

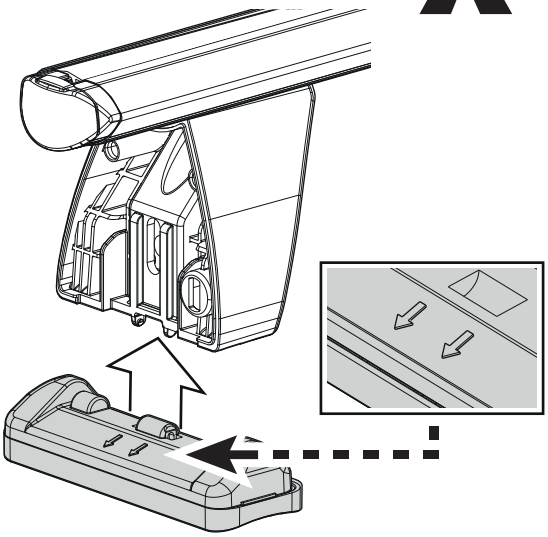

5 FRONT ROOF BAR

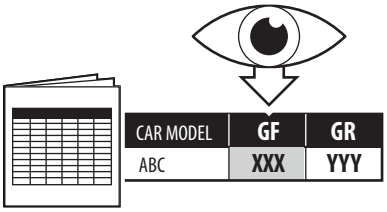

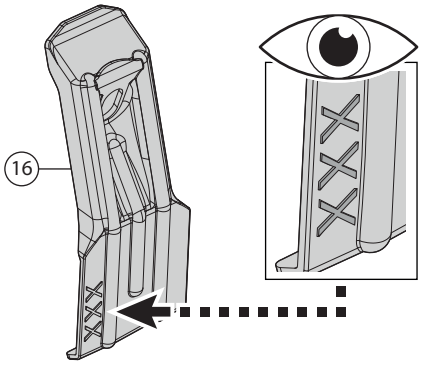

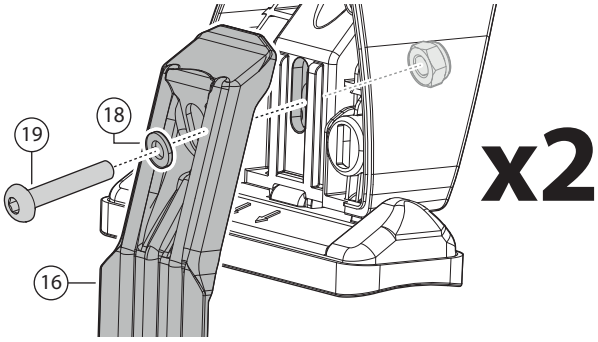

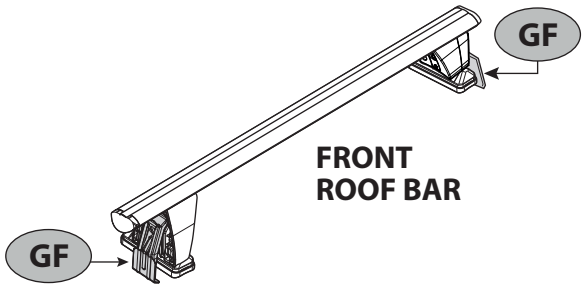

6 REAR ROOF BAR

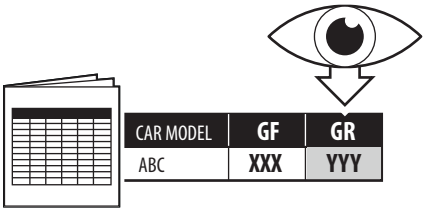

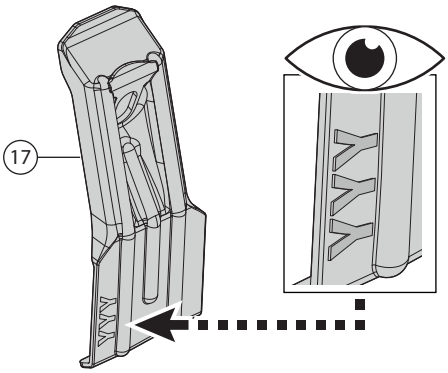

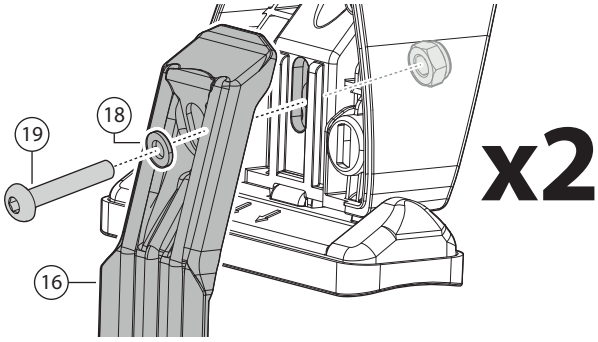

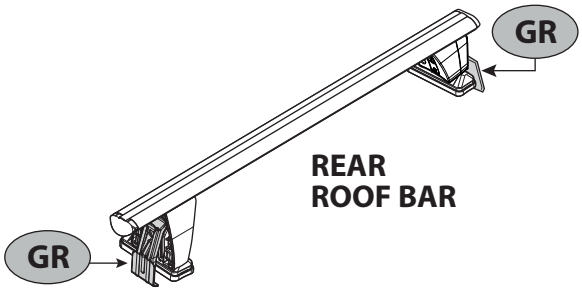

7

CAR MODEL	SCREW F	SCREW R	PIN F	PIN R
ABC	XxY	XxY	-	-

8 SCREW

page 09

CAR MODEL	SCREW F	SCREW R	PIN F	PIN R
ABC	-	-	✔	✔

11 PIN

page 12

CAR MODEL	SCREW F	SCREW R	PIN F	PIN R
ABC	-	-	-	-

14 page 15

8 SCREW

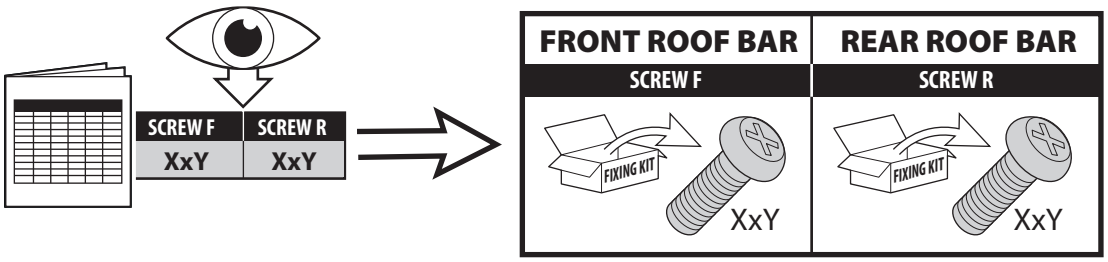
SCREW F
SCREW R
XxY
XxY
FRONT ROOF BAR
REAR ROOF BAR
SCREW F
SCREW R
FIXING KIT
XxY
FIXING KIT
XxY

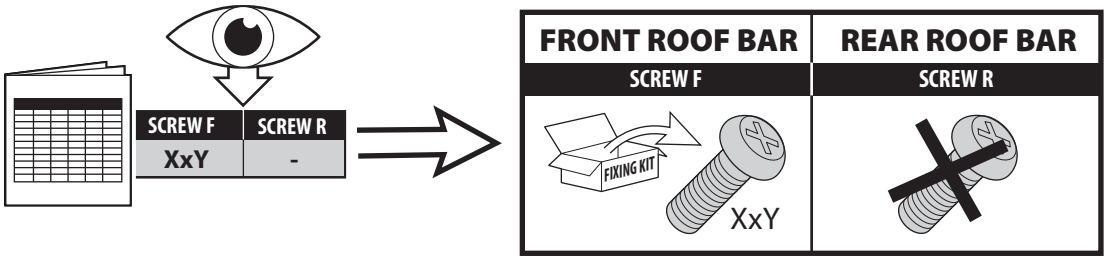
SCREW F
SCREW R
XxY
-
FRONT ROOF BAR
REAR ROOF BAR
SCREW F
SCREW R
FIXING KIT
XxY

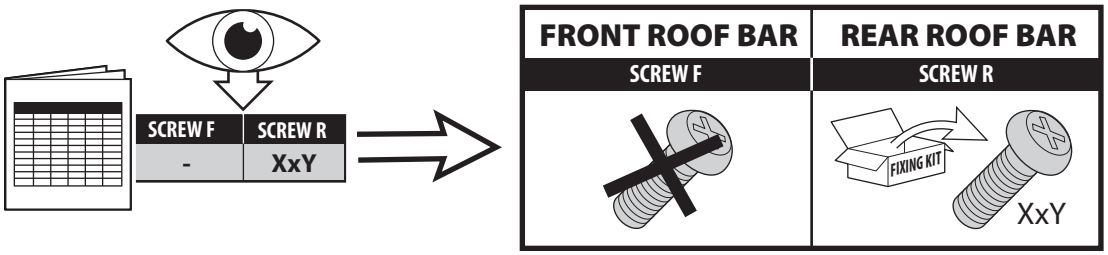
SCREW F
SCREW R
-
XxY
FRONT ROOF BAR
REAR ROOF BAR
SCREW F
SCREW R
FIXING KIT
XxY

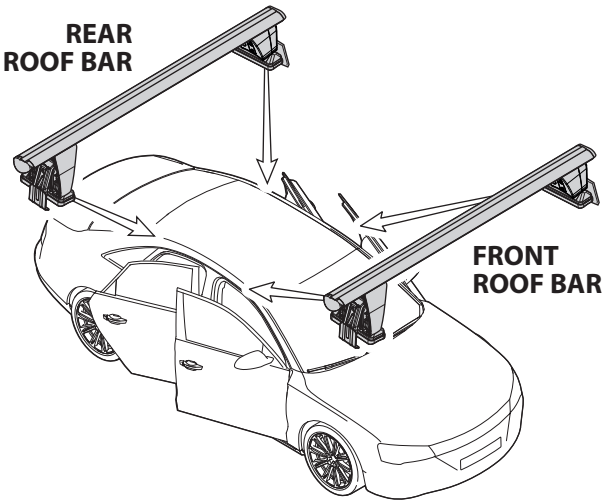
REAR
ROOF BAR
FRONT
ROOF BAR

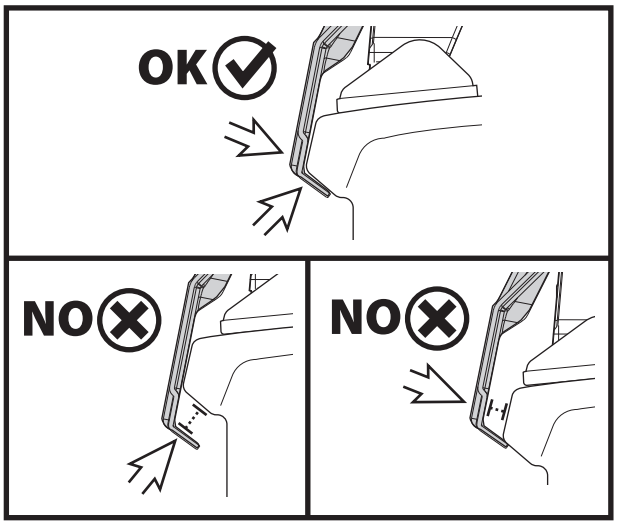
OK
NO
NO

9 SCREW

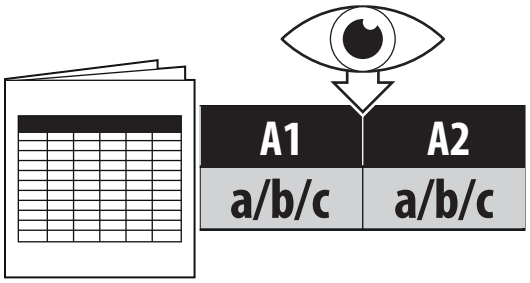
A1
A2
a/b/c
a/b/c

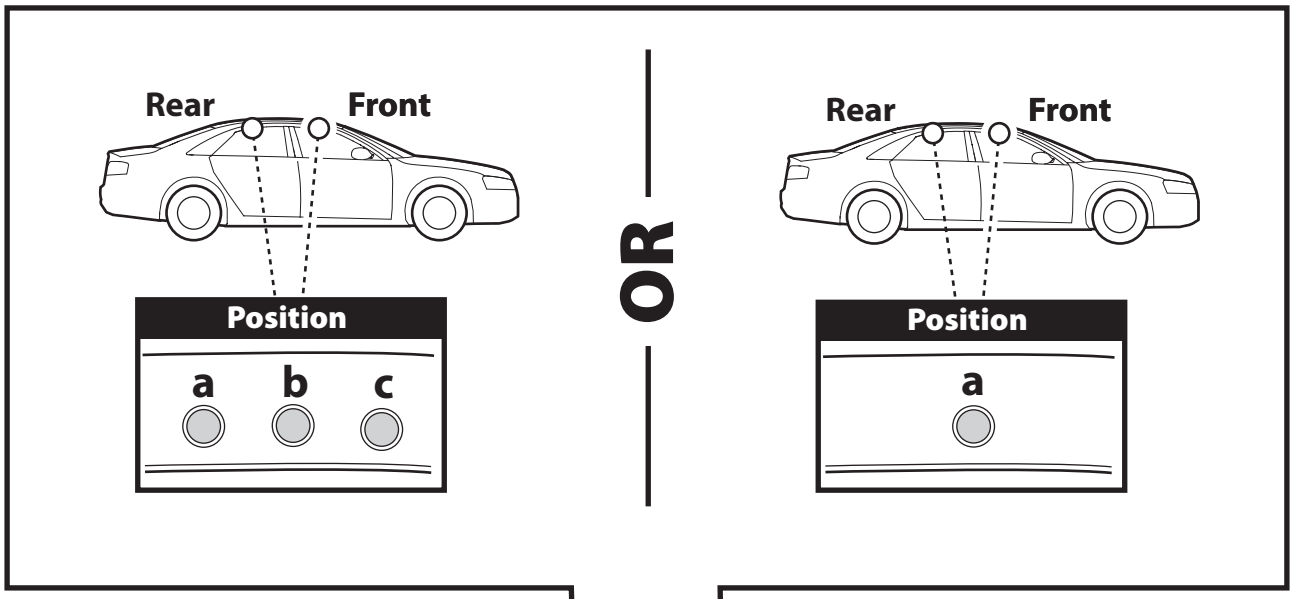
Rear
Front
Position
a
b
c
OR
Rear
Front
Position
a

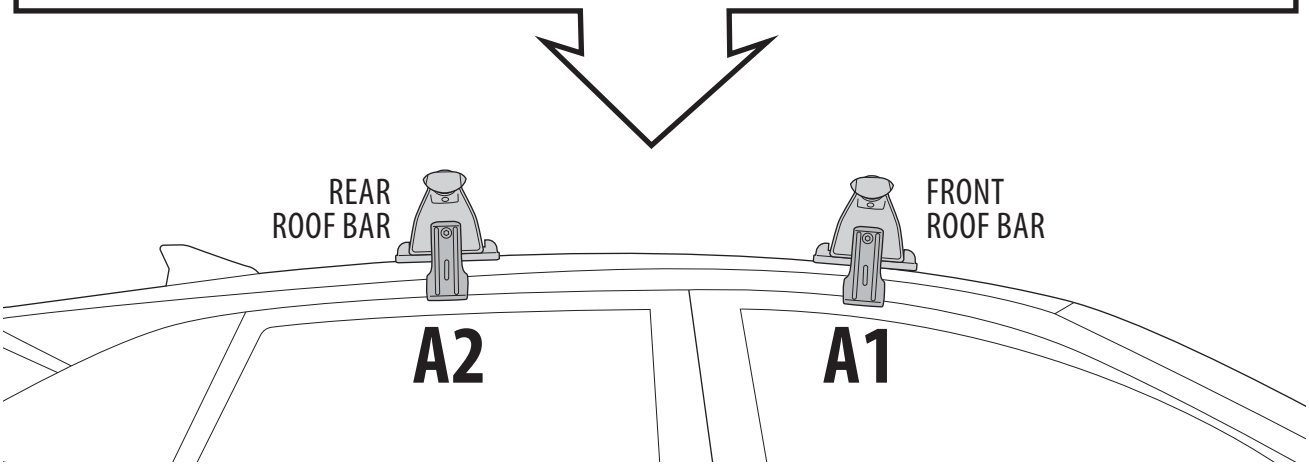
REAR
ROOF BAR
FRONT
ROOF BAR
A2
A1

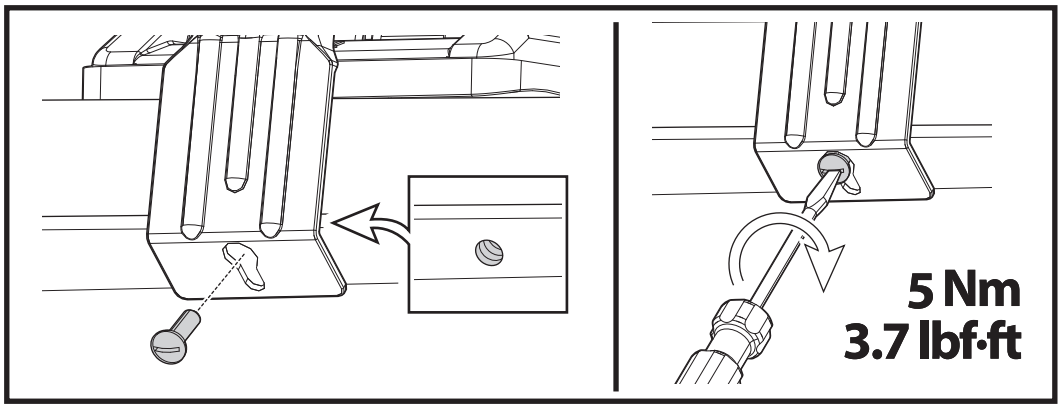
5 Nm
3.7 lbf·ft

10 SCREW

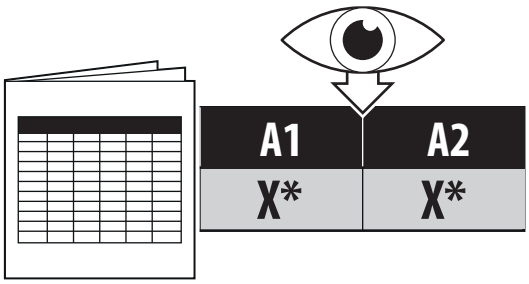

***Predisposizione originale**
Original arrangement

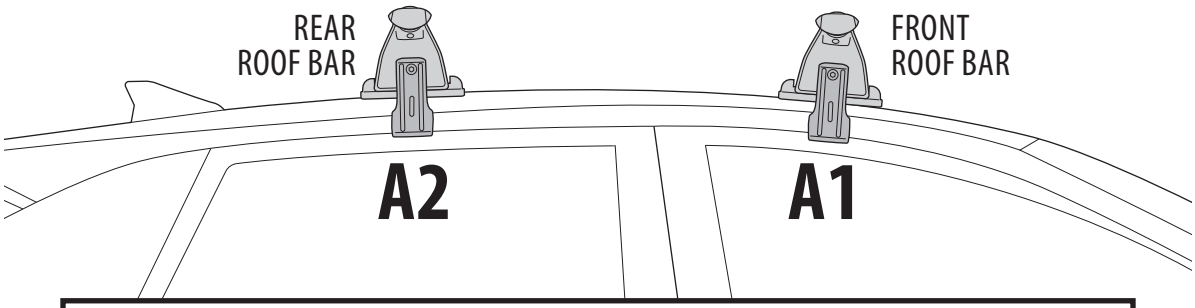

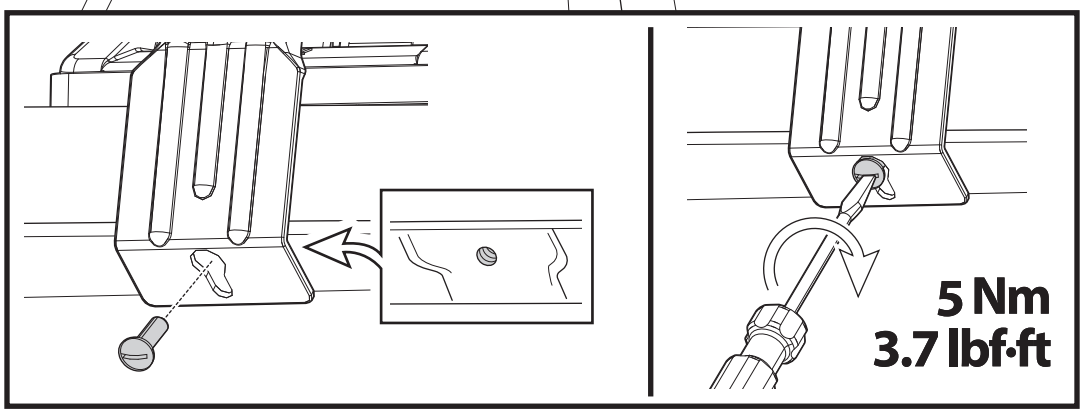

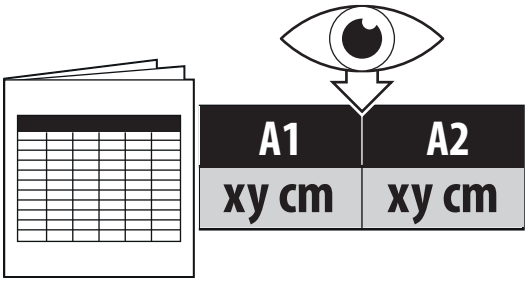

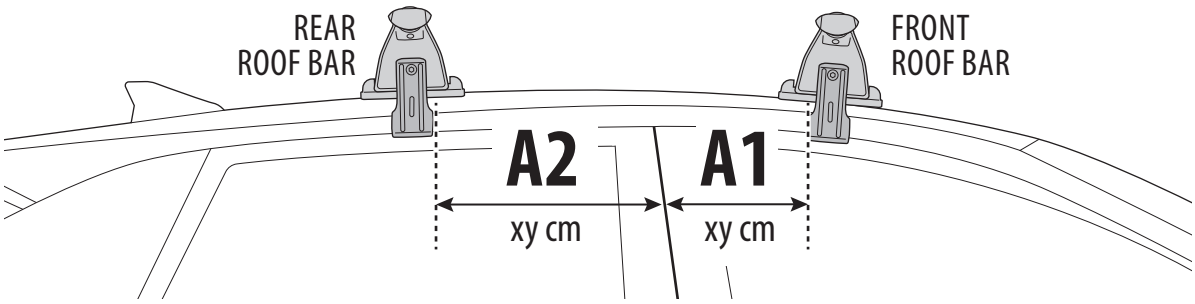

15 page 16

11 PIN

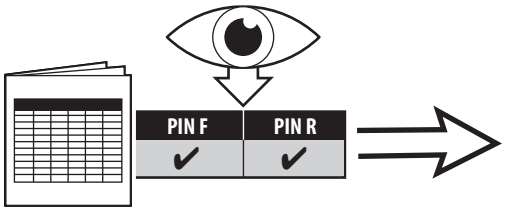

FRONT ROOF BAR	REAR ROOF BAR
PIN F	PIN R

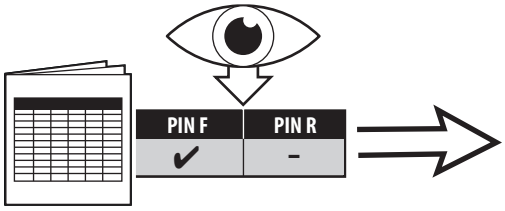

FRONT ROOF BAR	REAR ROOF BAR
PIN F	PIN R

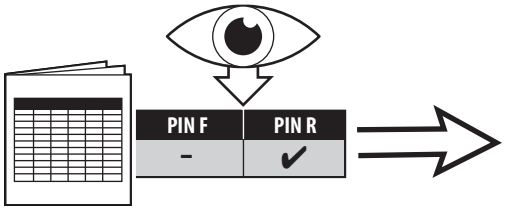

FRONT ROOF BAR	REAR ROOF BAR
PIN F	PIN R

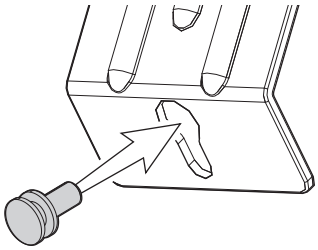

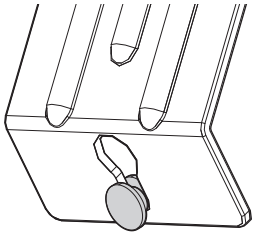

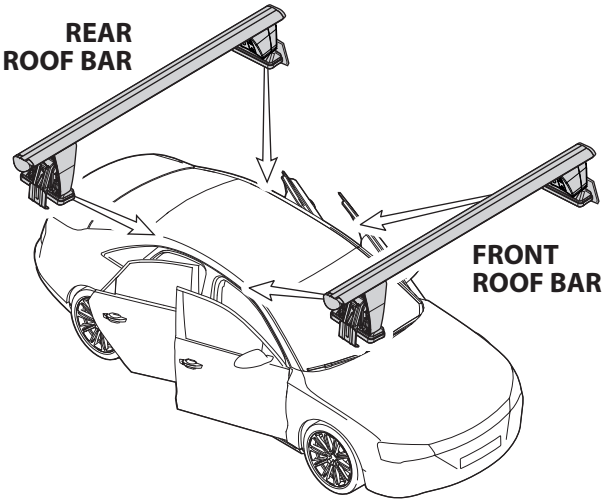

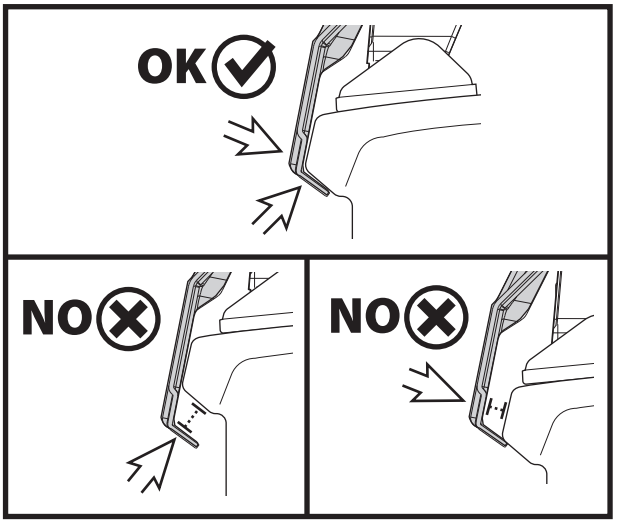

12 PIN

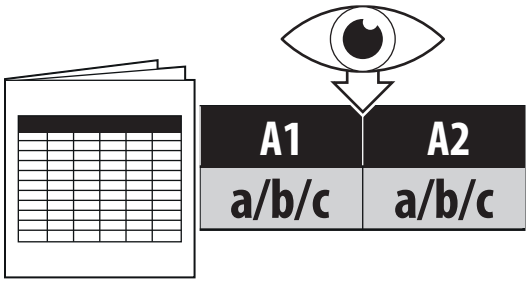
A1
A2
a/b/c
a/b/c

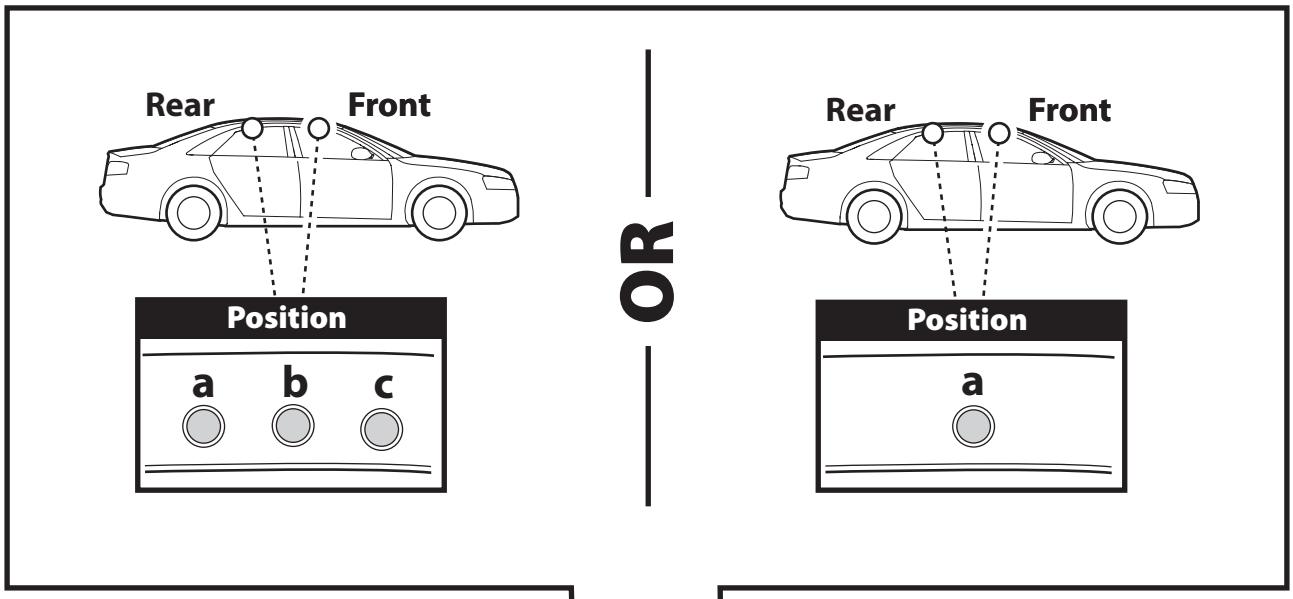
Rear
Front
Position
a
b
c
OR
Rear
Front
Position
a

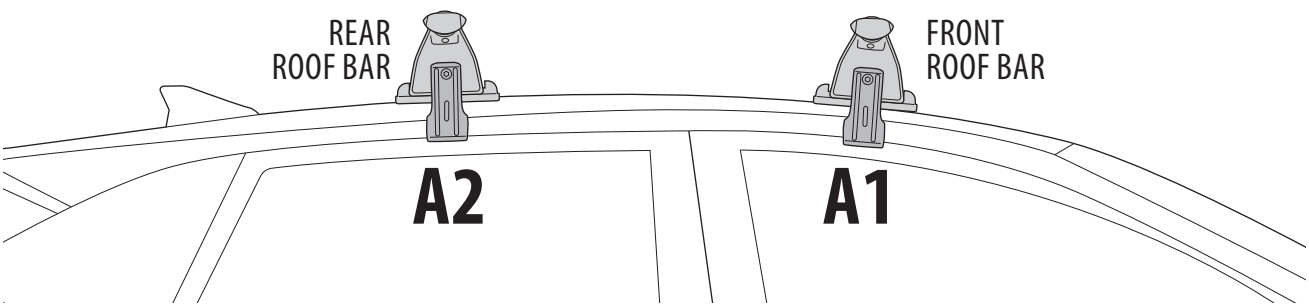
REAR
ROOF BAR
FRONT
ROOF BAR
A2
A1

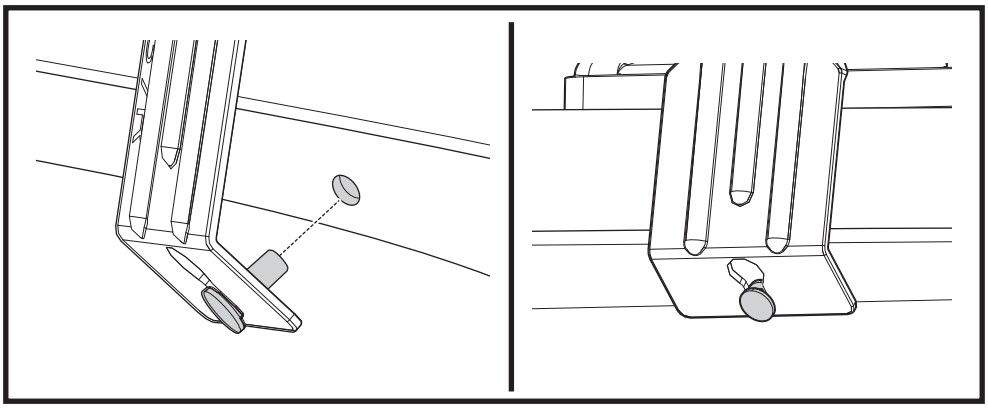

13 PIN

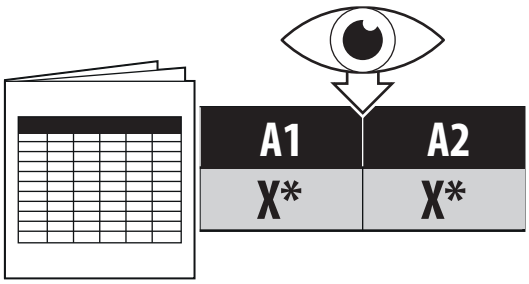

***Predisposizione originale**
Original arrangement

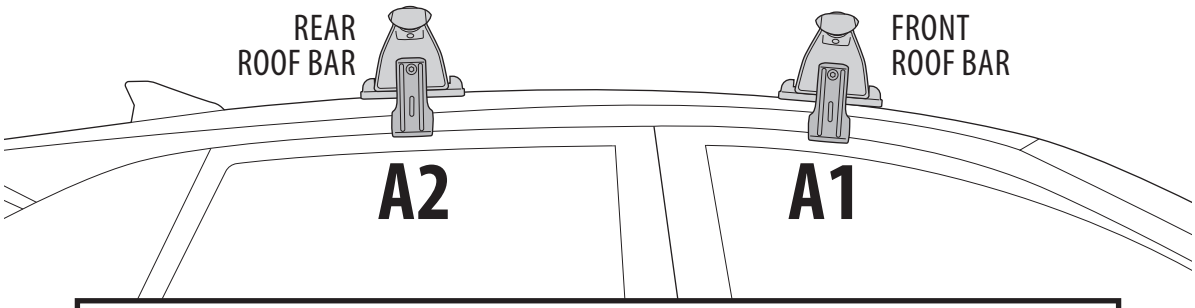

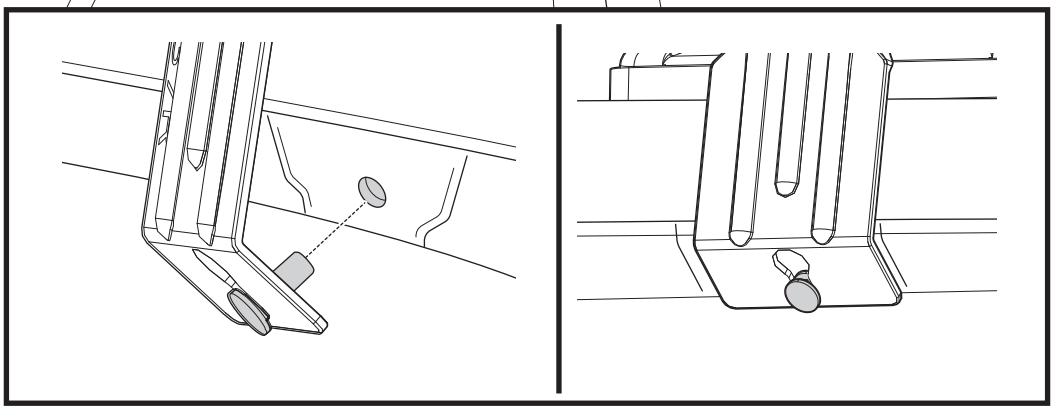

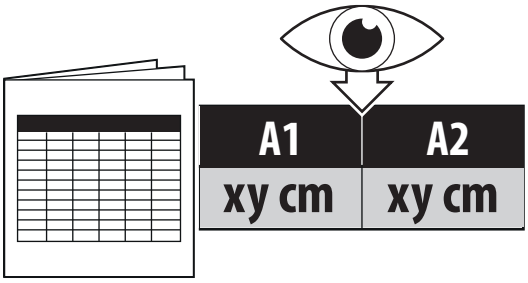

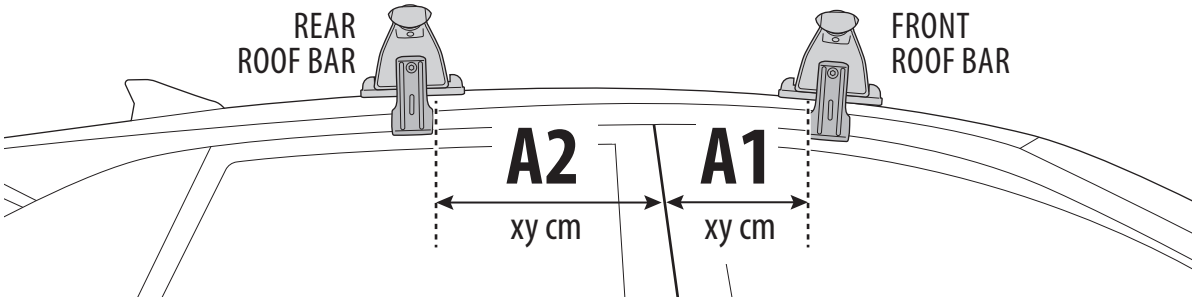

15 page 16

14

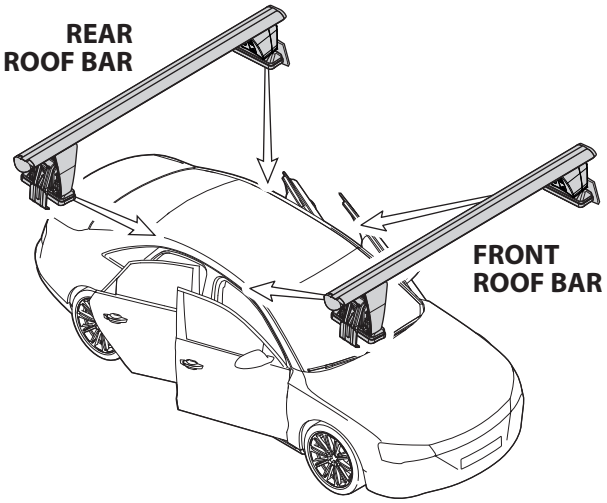

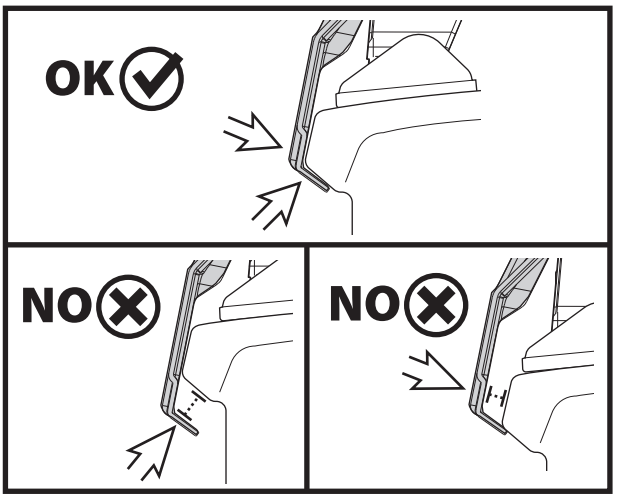

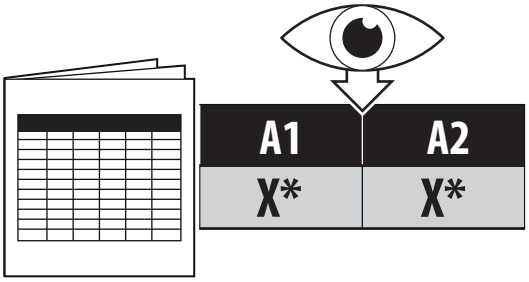

***Predisposizione originale**
Original arrangement

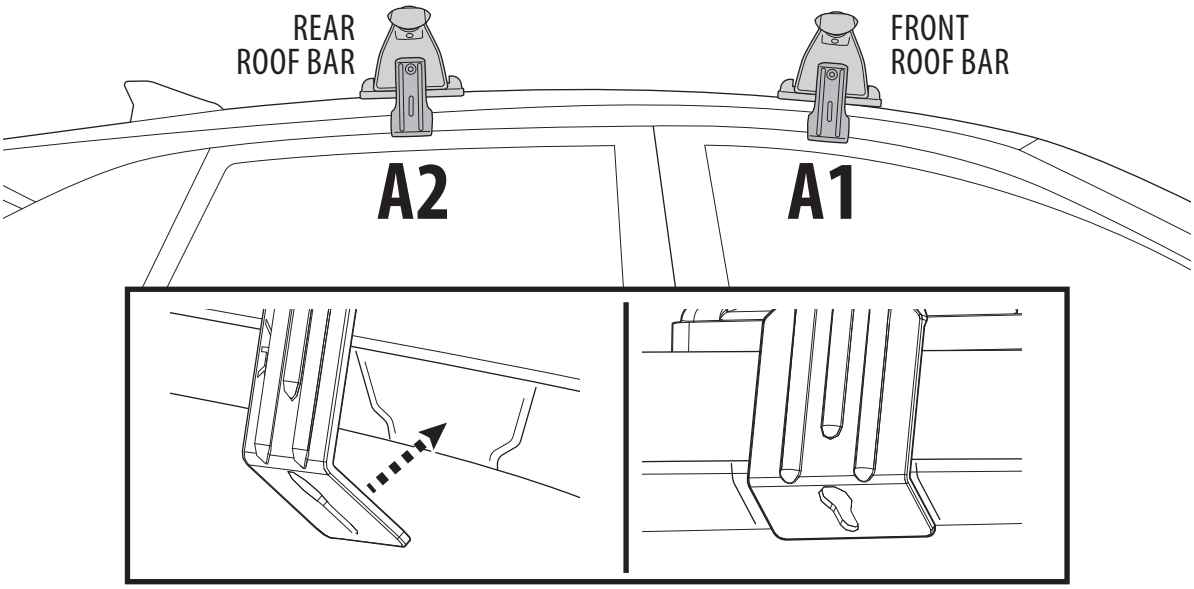

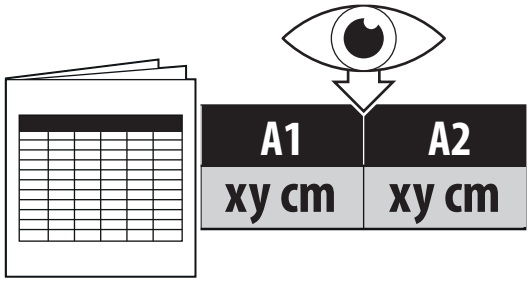

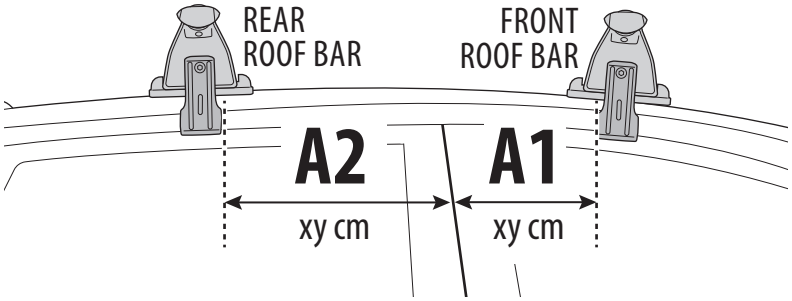

15

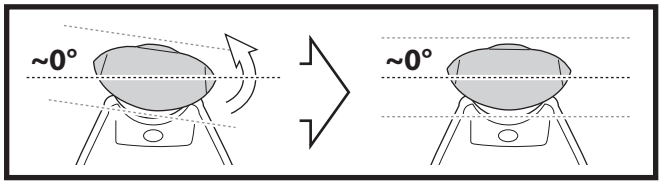
~0°
~0°

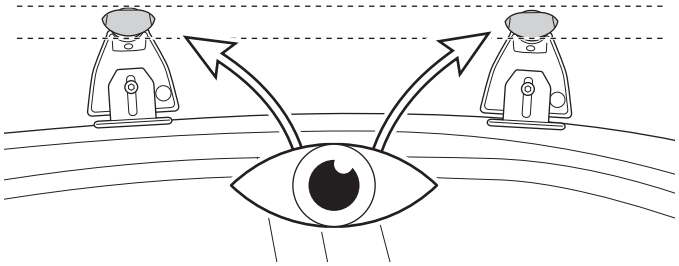

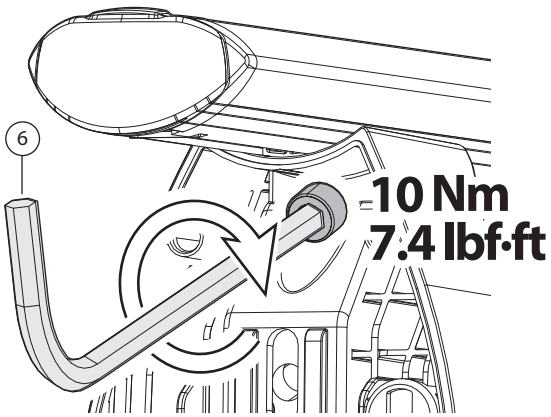
6
10 Nm
7.4 lbf·ft

16

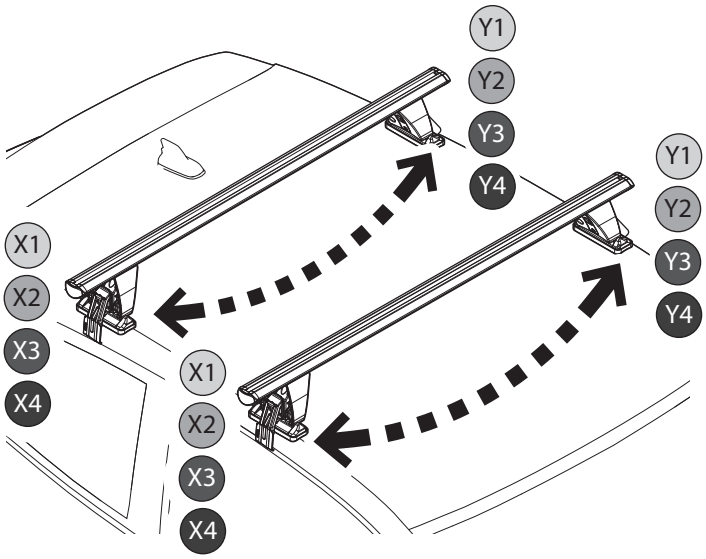
Y1
Y2
Y3
Y4
X1
X2
X3
X4
Y1
Y2
Y3
Y4
X1
X2
X3
X4

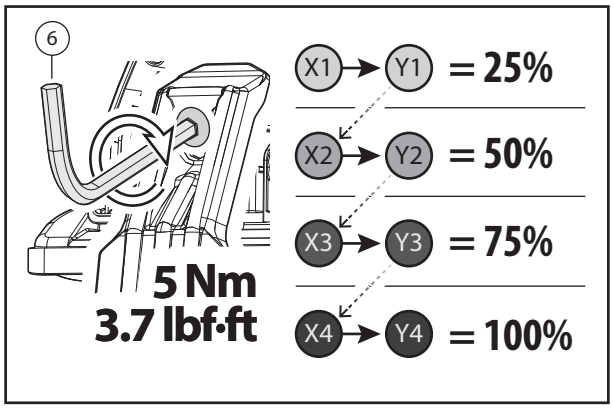
6
5 Nm
3.7 lbf·ft
X1 → Y1 = 25%
X2 → Y2 = 50%
X3 → Y3 = 75%
X4 → Y4 = 100%

17

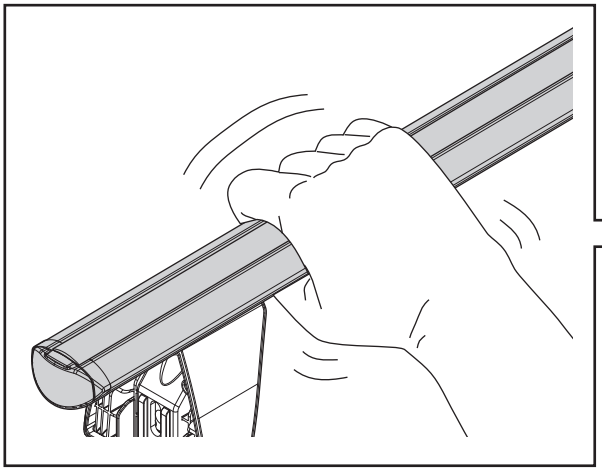

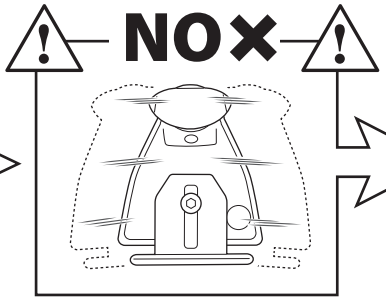
NO ✕

16

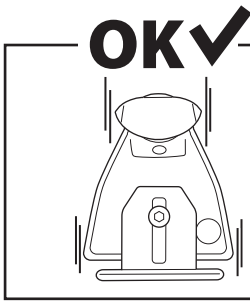
OK ✓

18

18

X4

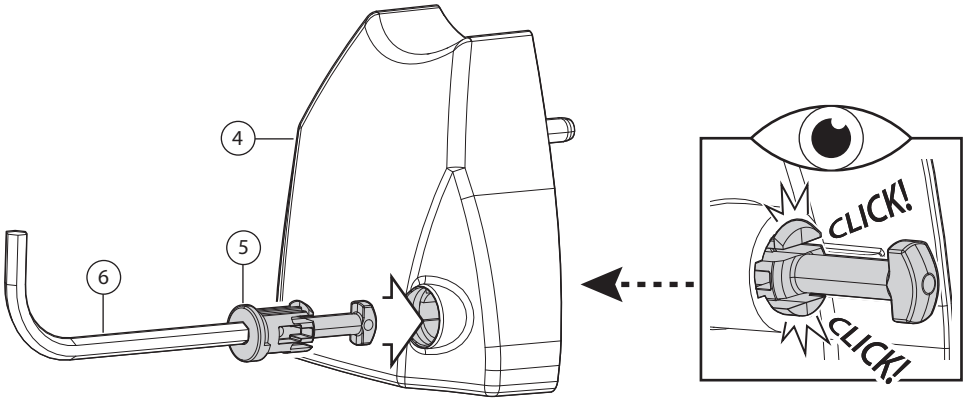

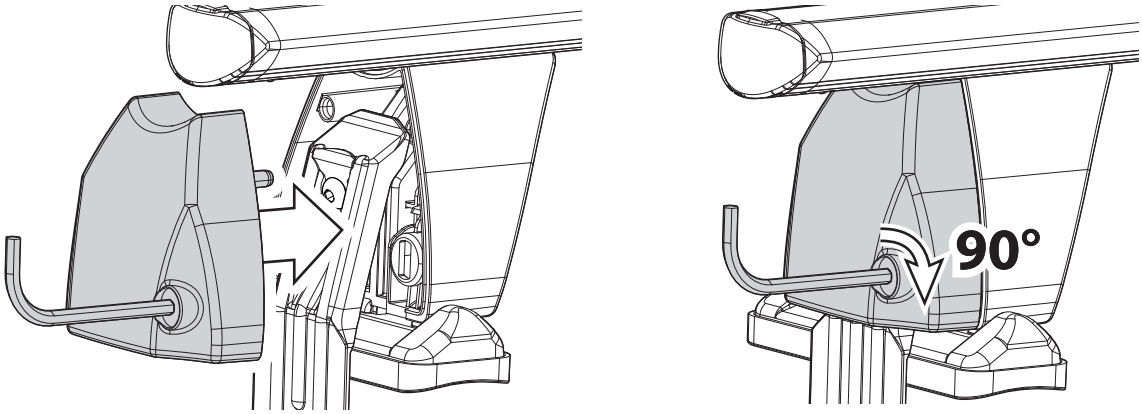

OPTIONAL kit 000084800000

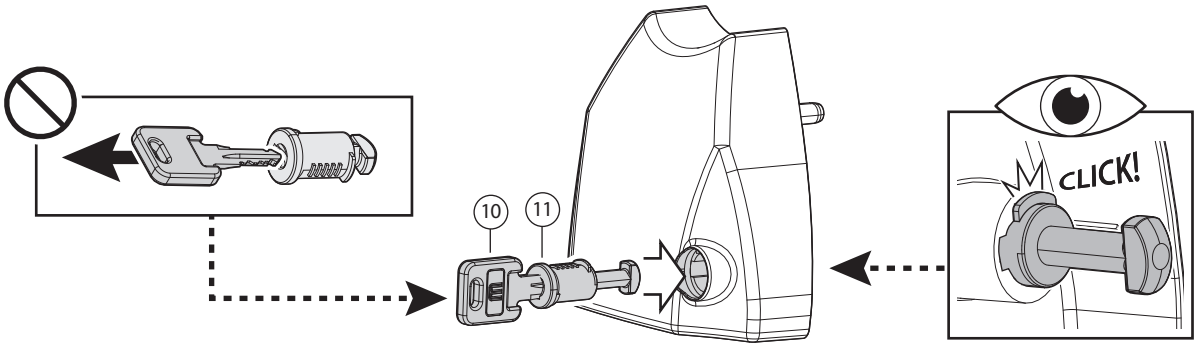

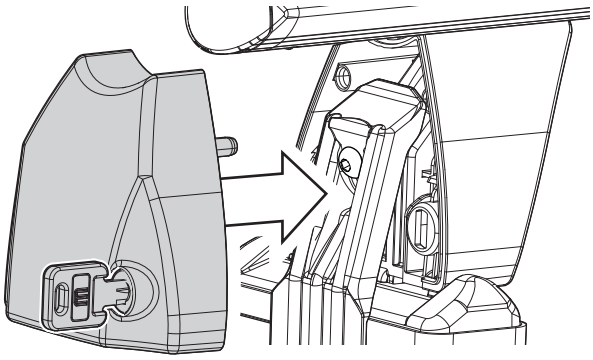

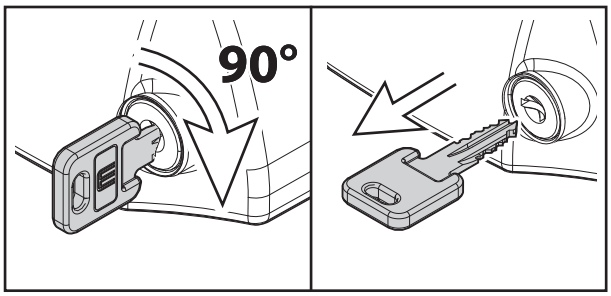

IT) Ricambi (A Richiesta) | EN) Spare Parts (Made to order) | DE) E Teile (auf Anfrage) FR) Pièces de rechange (Sur commande) | ES) Piezas de recambio (Previa solicitud)

MAIN KIT

3 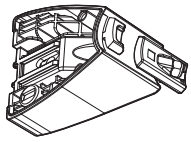 x1	4 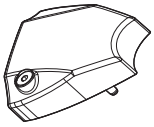 x1	5 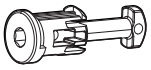 x4	6 5mm 0.2″ x1
700029500000	700029600000	700025300000	700025000000
7 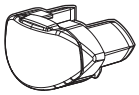 x2	2 1190mm 47″ x1	8 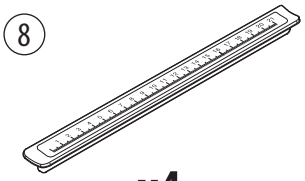 x4	9 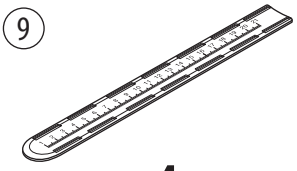 x4
700029300000	700007900000	700029400000	700032000000

FIXING KIT

12 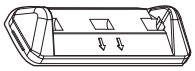 x1 + 13 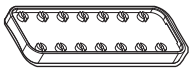 x1	14 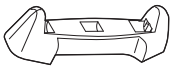 x1 + 15 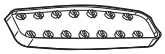 x1	18 Ø8x18 x4 + 19 M8x60 x4
700029100000	700029200000	700008600000

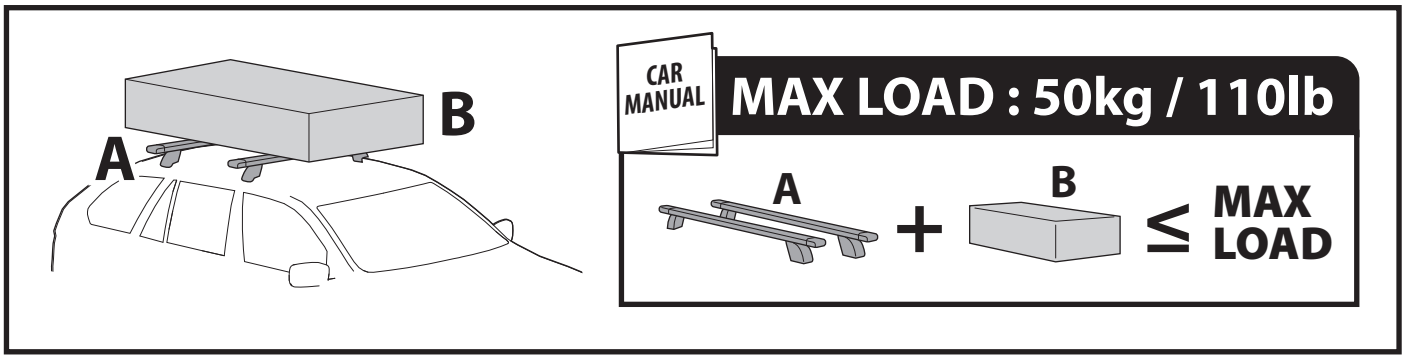
A
B
CAR MANUAL
MAX LOAD : 50kg / 110lb
A
+
B
≤ MAX LOAD

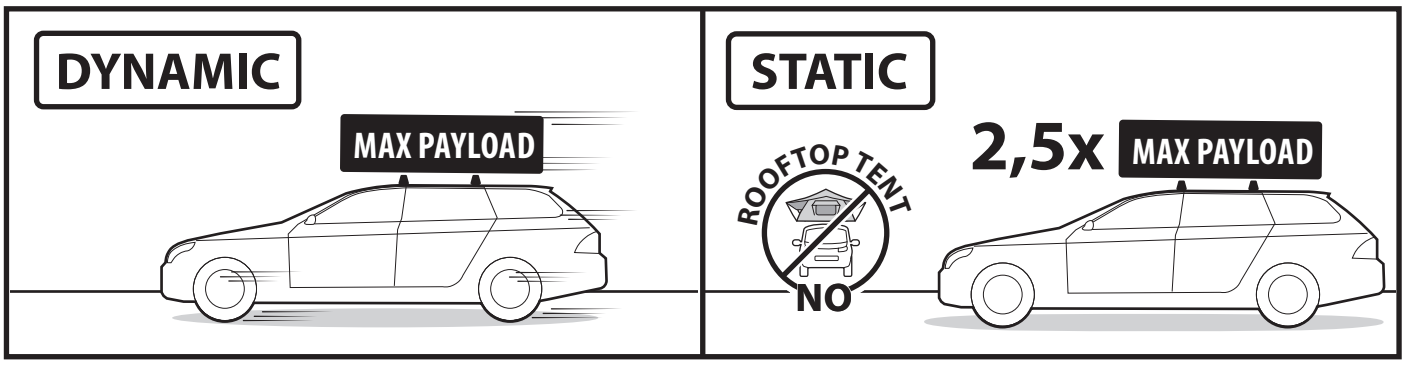
DYNAMIC
MAX PAYLOAD
STATIC
ROOFTOP TENT
NO
2,5x
MAX PAYLOAD

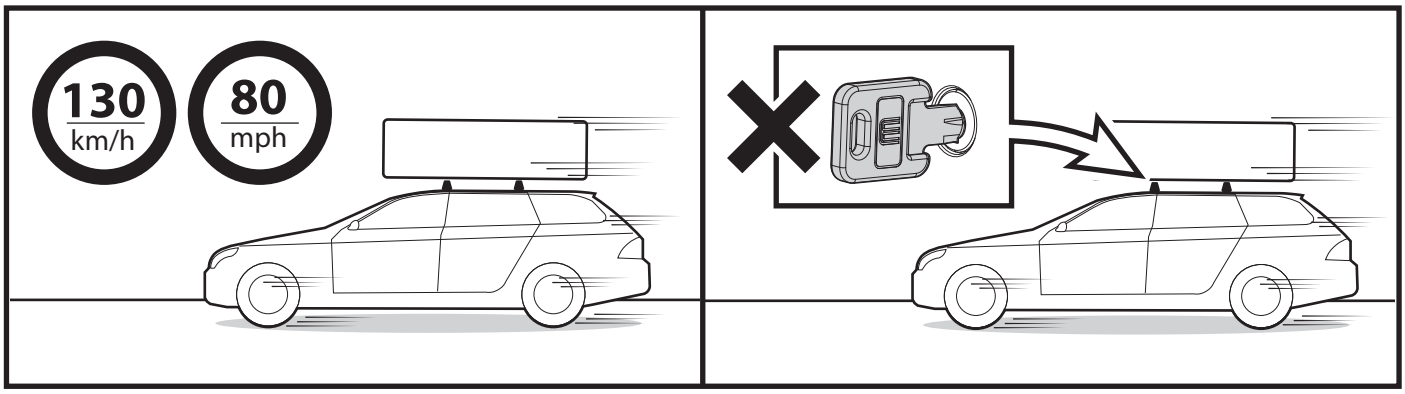
130
km/h
80
mph

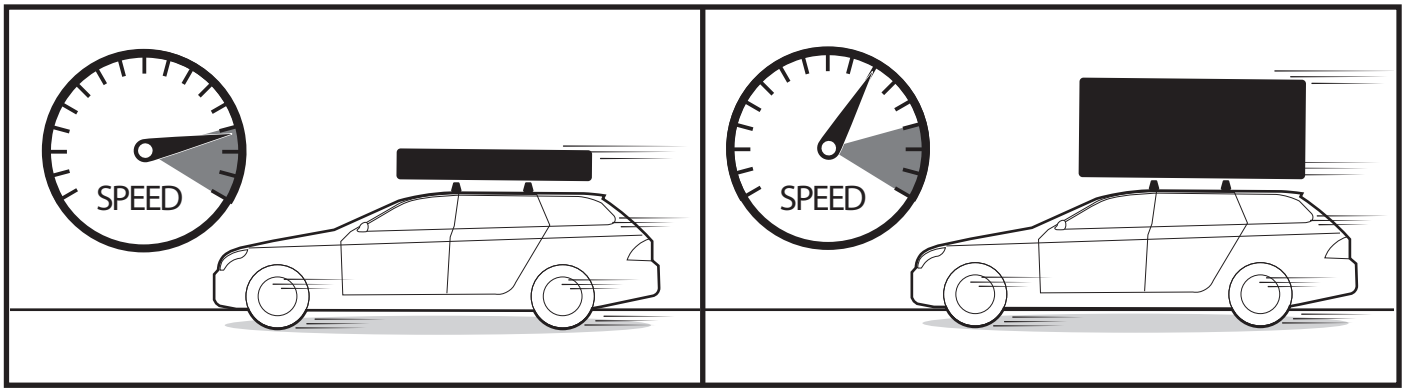
SPEED
SPEED

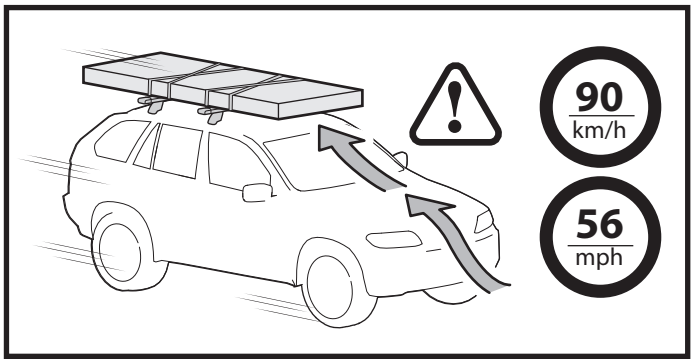
90
km/h
56
mph

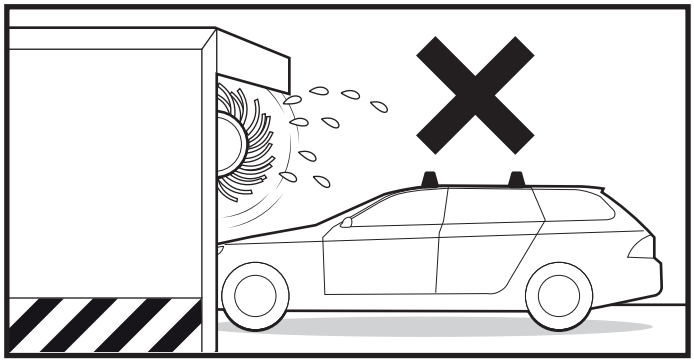

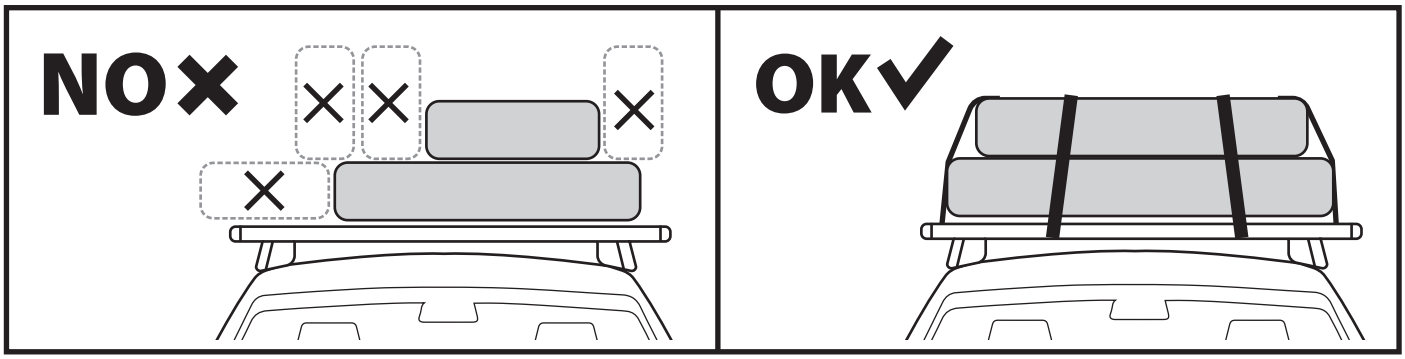

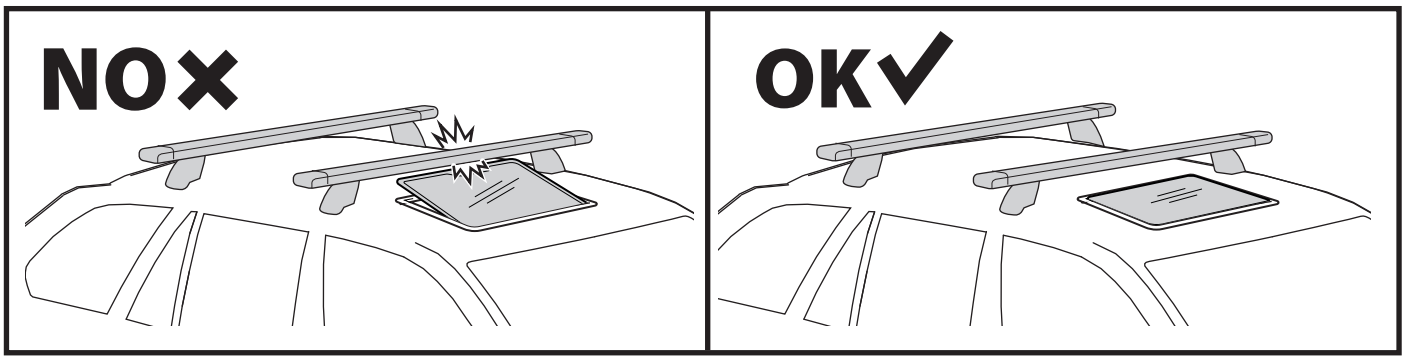

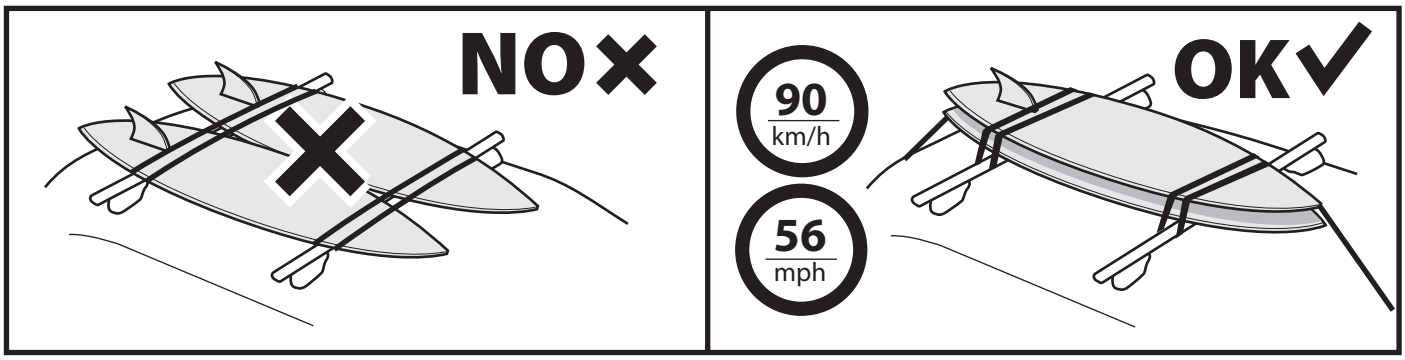

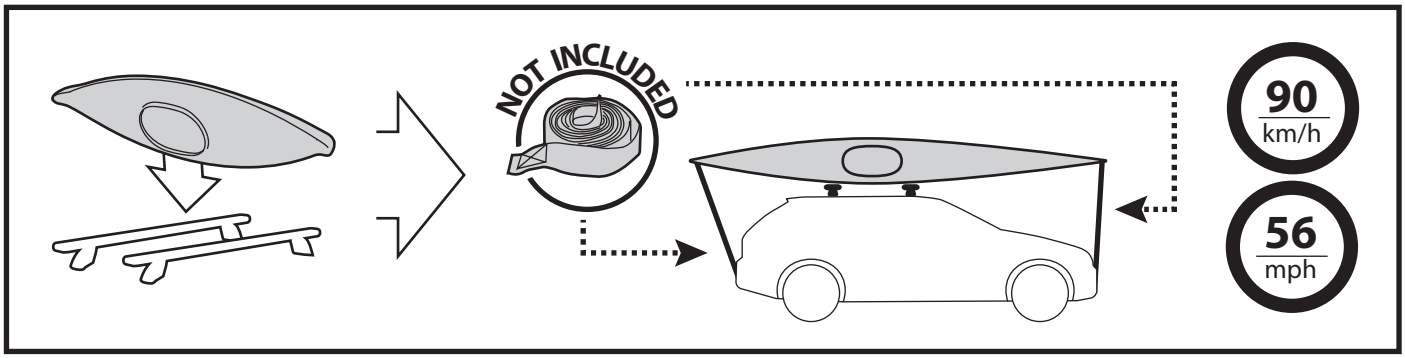

www.dometic.com

PRODUCT REGISTRATION

5000394FR001
11/11/2025