DOMETIC

STEERING SYSTEMS
MECHANICAL CONTROLS

INSTALLER: THESE INSTRUCTIONS CONTAIN IMPORTANT SAFETY INFORMATION AND MUST BE FORWARDED TO MARINE CRAFT OWNER.

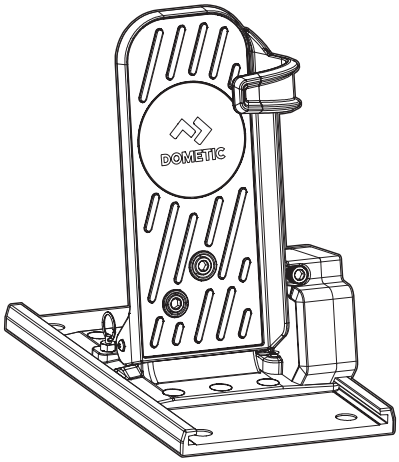

FT7000SEP

EN **Pro-Pedal Electronic Throttle**
Installation Manual. 2

⚠ WARNING
Cancer and Reproductive Harm
www.P65Warnings.ca.gov

REVISION 0 Form No. IS-FT7000SEP 02/22 | ©2022 Dometic Corporation

Service Center & Dealer Locations
Visit: www.dometic.com

Please read these instructions carefully and follow all instructions, guidelines, and warnings included in this product manual in order to ensure that you install, use, and maintain the product properly at all times. These instructions MUST stay with this product.

By using the product, you hereby confirm that you have read all instructions, guidelines, and warnings carefully and that you understand and agree to abide by the terms and conditions as set forth herein. You agree to use this product only for the intended purpose and application and in accordance with the instructions, guidelines, and warnings as set forth in this product manual as well as in accordance with all applicable laws and regulations. A failure to read and follow the instructions and warnings set forth herein may result in an injury to yourself and others, damage to your product, or damage to other property in the vicinity. This product manual, including the instructions, guidelines, and warnings, and related documentation, may be subject to changes and updates. For up-to-date product information, please visit www.dometic.com.

Contents

Contents 2

1 Explanation of Symbols and Safety Instructions 2

1.1 Recognize Safety Information 2

1.2 Understand Signal Words 2

1.3 Supplemental Directives 3

1.4 General Safety Messages 3

2 Intended Use 3

3 General Information 3

3.1 Compatibility 3

3.2 Component Dimensions 4

3.3 Tools and Materials 4

4 Preinstallation 4

4.1 Planning the Wiring Harness Route 4

4.2 Determining the Wiring Harness Length 5

4.3 Preparing the Mounting Location 5

5 Installation 5

5.1 Connecting the Wiring Harness to the Engine Control 5

5.2 Connecting the Wiring Harness to the Engine 6

5.3 Mounting the Engine Control 6

6 Adjusting the Engine Control 6

6.1 Slide Mount Adjustment 7

6.2 Wide Open Throttle End Stop Adjustment . . 7

6.3 Torsion Spring Adjustment 8

6.4 Idle Adjustment 8

7 Maintenance 8

8 Disposal 9

9 Warranty Information 9

10 Mounting Template 10

1 Explanation of Symbols and Safety Instructions

This manual has safety information and instructions to help you eliminate or reduce the risk of accidents and injuries.

1.1 Recognize Safety Information

⚠ **This is the safety alert symbol.** It is used to alert you to potential physical injury hazards. Obey all safety messages that follow this symbol to avoid possible injury or death.

1.2 Understand Signal Words

A signal word will identify safety messages and property damage messages, and also will indicate the degree or level of hazard seriousness.

⚠ **WARNING**
Indicates a hazardous situation that, if **not** avoided, could result in death or serious injury.

NOTICE: Used to address practices **not** related to physical injury.

ⓘ Indicates additional information that is not related to physical injury.

1.3 Supplemental Directives

To reduce the risk of accidents and injuries, please observe the following directives before proceeding to install this product:

- Read and follow all safety information and instructions.
- Read and understand these instructions before installing this product.
- The installation must comply with all applicable local or national codes, including the latest edition of the following standards:

  U.S.A.

  – ANSI/NFPA70, National Electrical Code (NEC)

  – American Boat and Yacht Council (ABYC)

1.4 General Safety Messages

WARNING: ELECTRICAL SHOCK, FIRE, AND/OR EXPLOSION HAZARD. Failure to obey the following warnings could result in death or serious injury:

- Use only Dometic replacement parts and components that are specifically approved for use with the product.
- Avoid improper installation, adjustment, alterations, service, or maintenance of the product.
- Do **not** modify this product in any way. Modification can be extremely hazardous.

2 Intended Use

The Pro-Pedal Electronic Throttle, hereinafter referred to as engine control, provides throttle operation for Suzuki outboard engines. This engine control is only suitable for the intended purpose and application in accordance with these instructions.

This manual provides information that is necessary for the proper installation of the engine control. Poor installation and/or improper operating or maintenance will result in unsatisfactory performance and a possible failure. The manufacturer accepts no liability for any injury or damage to the product resulting from:

- Incorrect assembly or connection
- Incorrect maintenance or use of spare parts other than original spare parts provided by the manufacturer
- Alterations to the product without express permission from the manufacturer
- Use for purposes other than those described in this manual

Dometic reserves the right to change product appearance and product specifications.

3 General Information

This section provides general information about the engine control and its components.

Dometic recommends the installation and use of an emergency ignition interrupt switch. This switch should be connected by a cord to the boat driver. Should the driver be thrown from the helm position, the engine will automatically shut off. This switch can be obtained from most marine dealers and distributors.

The images used in this document are for reference purposes only. Components and component locations may vary according to specific product models. Measurements may vary ±0.38 in. (10 mm).

3.1 Compatibility

This engine control is only compatible with Suzuki outboard engines.

3.2 Component Dimensions

This section provides the general dimensions of the rear, top, and front mounted engine controls.

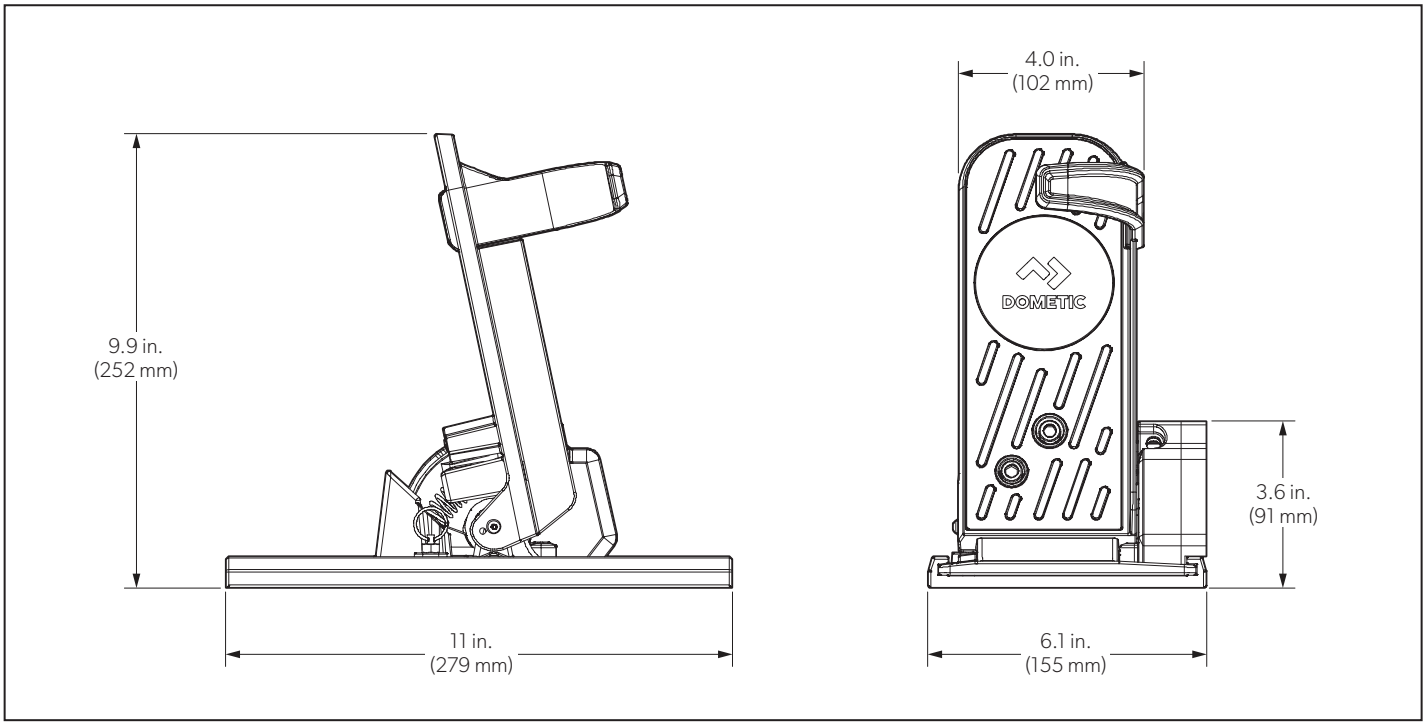

1 Front Mount Engine Control Dimensions

3.3 Tools and Materials

Dometic recommends that the following tools and materials be used while installing the engine control.

Included Parts	Quantity
Pedal Assembly	1
Slide Mount	1
Slide Mount Screw	4
Mounting Template	1

Required Parts Not Included	Quantity
Suzuki Wiring Harness	1

Recommended Tools	
Phillips Head Screwdriver	Power Drill
1/4 in. Allen Wrench	

4 Preinstallation

WARNING: ELECTRIC SHOCK HAZARD. Failure to obey these warnings could result in death or serious injury.

- Disconnect the power before performing any installation or maintenance activities.
- Before cutting or drilling, check under the deck and make sure there is sufficient clearance and space around any wires, tubes, pipes, and other obstructions.

This section describes the activities to complete prior to installing the engine control.

4.1 Planning the Wiring Harness Route

Consider the following when planning where to route the wiring harness:

- Do not bundle the wiring harness together with electrical wiring.
- Do not rest the wiring harness against sharp edges that could cause chafing.
- Sharp or frequent bends may result in premature wiring harness wear.

Plan the route for the wiring harness according to the recommendations provided by the engine manufacturer.

4.2 Determining the Wiring Harness Length

NOTICE: **Always** use the correct wiring harness length. Connecting two short wiring harnesses together to make a longer wiring harness assembly is **not** recommended.

Measure from the engine control connection along an unobstructed routing to the engine's TAC module.

4.3 Preparing the Mounting Location

This section describes how to plan and prepare the engine control mounting location.

4.3.1 Planning the Mounting Location

To ensure the best performance, the free operation of the pedal and all its connections is essential.

Consider the following when planning where to mount the engine control:

- Allow adequate clearance for the full range of pedal movement at any position on the slide mount (if one is used) and for the operator to comfortably position their leg.
- Allow adequate clearance under the deck for the wiring harness.

4.3.2 Preparing the Mounting Opening

If replacing an engine control, refer to the manufacturer's instructions for removing the existing engine control, then compare the mounting template to the existing opening and modify as required.

Use the mounting template to cut and drill the required mounting openings. See "Mounting Template" on page 10.

5 Installation

This section describes how to install the wiring harness and mount the engine control.

5.1 Connecting the Wiring Harness to the Engine Control

Always connect the wiring harness to the engine control before connecting it to the engine.

1. Route the wiring harness from the planned location of the engine control to the engine. See "Planning the Wiring Harness Route" on page 4.

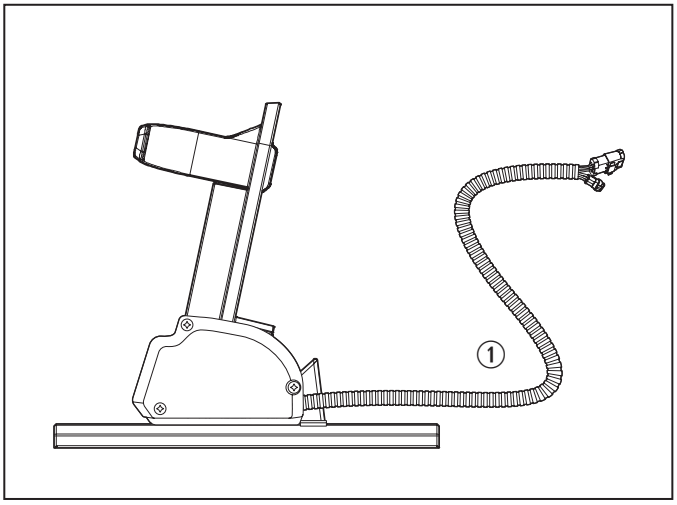

2 Connecting the Wiring Harness Extension

① Wiring Harness Extension

2. Connect the wiring harness to the wiring harness extension of the engine control.

   Ensure that the connection is fully seated, latched, and a water tight seal is achieved.

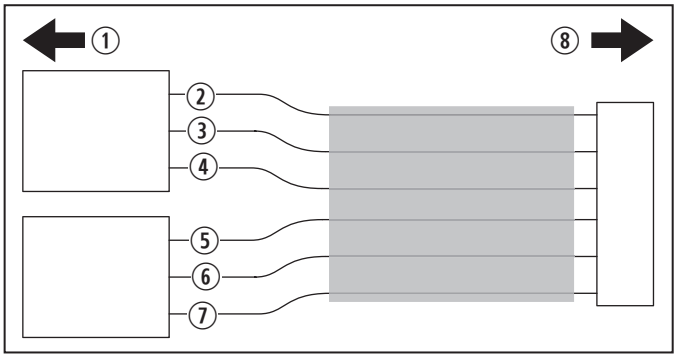

3 Wiring Harness Pin Out Identification

1. To the Engine Control
2. SK2-A - APS 1 Ground (Black)
3. SK2-B - APS 1 Signal (Green)
4. SK2-C - APS 1 Supply 5V (Red)
5. PL1-A - APS 2 Supply 5V (Yellow)
6. PL1-B - APS 2 Signal (White)
7. PL1-C - APS 2 Ground (Blue)
8. To the Engine TAC Module

PL1 Connector[1]

Part Number	Description
W3P	Locking Wedge
DT04-3P-CE02	Connector, 3-way Receptacle

[1] Use DT Series pin contacts.

SK2 Connector[2]

Part Number	Description
W3S	Locking Wedge
DT06-3S-CE06	Connector, 3-way Plug

[2] Use DT Series socket contacts.

5.2 Connecting the Wiring Harness to the Engine

Connect the wiring harness to the engine according to the instructions provided by the engine manufacturer.

5.3 Mounting the Engine Control

This section describes how to mount the engine control.

The wiring harness should be installed on the engine control prior to mounting.

1. If using a slide mount, do the following:
   a. Screw the slide mount securely to the deck of the boat in the preselected mounting location. See "Planning the Mounting Location" on page 5.
   b. Slide the engine control into the slide mount making sure the engine control is seated in both sides of the slide mount grooves.
   c. Slide the engine control to desired position and verify that the spring-loaded pin has locked in place. See "Slide Mount Adjustment" on page 7.
2. If mounting directly to the deck, do the following:
   a. Position the engine control in the preselected mounting location.
   b. Use the slide mount screws to secure the engine control to the boat deck.

6 Adjusting the Engine Control

NOTICE: To prevent damage to the transmission, turn off the boat engine and place the gear shift in neutral prior to making adjustments to the engine control.

The section describes how to adjust the pedal position, wide open throttle end stop, torsion spring, and idle position.

6.1 Slide Mount Adjustment

This section describes how to adjust the slide mount to allow the pedal to be comfortably operated by different people.

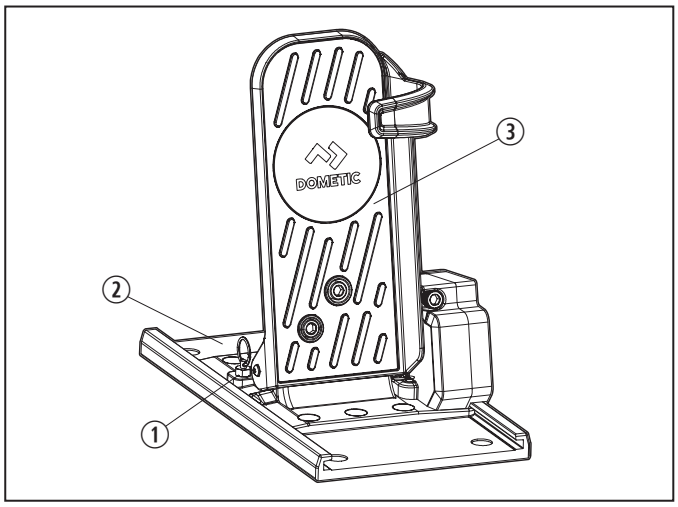

4 Adjusting the Slide Mount

① Spring-Loaded Pin ③ Pedal Assembly
② Slide Mount

1. Turn off the engine and shift into neutral.
2. Pull up on the spring-loaded pin.
3. Slide the pedal assembly forwards or backwards until it is in the desired position.
4. Release the spring-loaded pin. It will automatically lock the pedal assembly in place.

6.2 Wide Open Throttle End Stop Adjustment

This section describes how to adjust the wide open throttle end stop to prevent overtraveling the pedal and placing stress on the throttle body during wide open throttle operation.

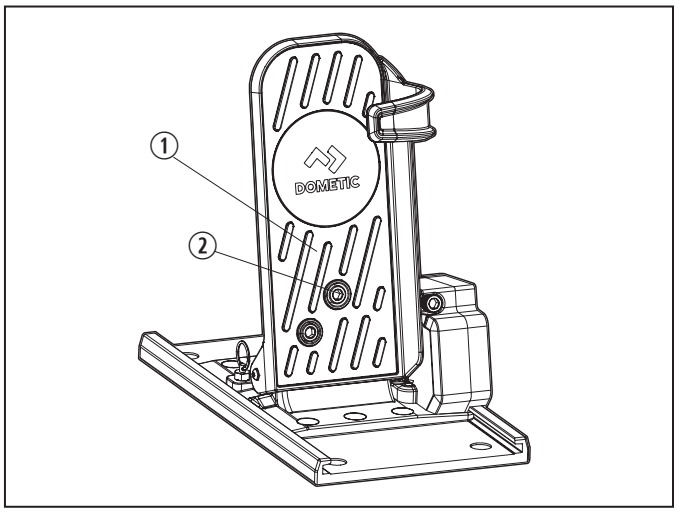

5 Adjusting the Wide Open Throttle End Stop

① Pedal ② End Stop Adjustment Screw

1. Turn off the engine and shift into neutral.
2. Turn the end stop adjustment screw clockwise to decrease the arc the pedal travels to reach the wide open throttle position.

6.3 Torsion Spring Adjustment

This section describes how to fine tune the pressure on the spring that returns the pedal to the idle position.

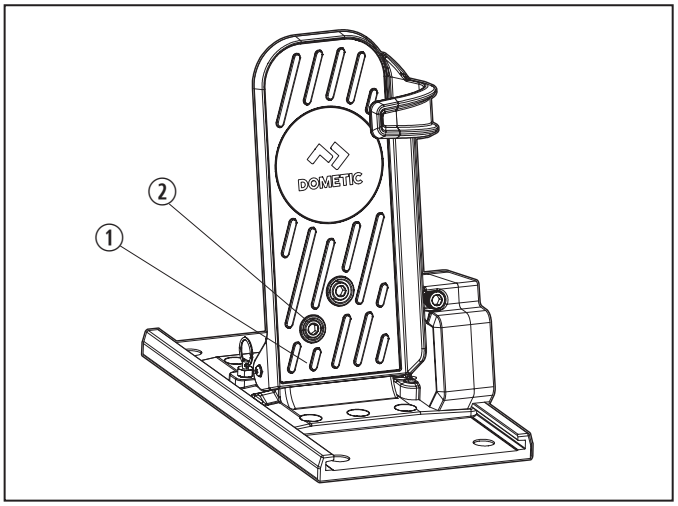

6 Adjusting the Torsion Spring

① Pedal ② Torsion Spring Adjustment Screw

1. Turn off the engine and shift into neutral.
2. Turn the torsion spring adjustment screw counter-clockwise to reduce the pressure on the spring and soften the pedal return.

6.4 Idle Adjustment

NOTICE: To prevent damage to the transmission, ensure that the engine is at idle before shifting into forward or reverse.

This section describes how to adjust the idle adjustment screw to prevent overtraveling of the pedal while at idle.

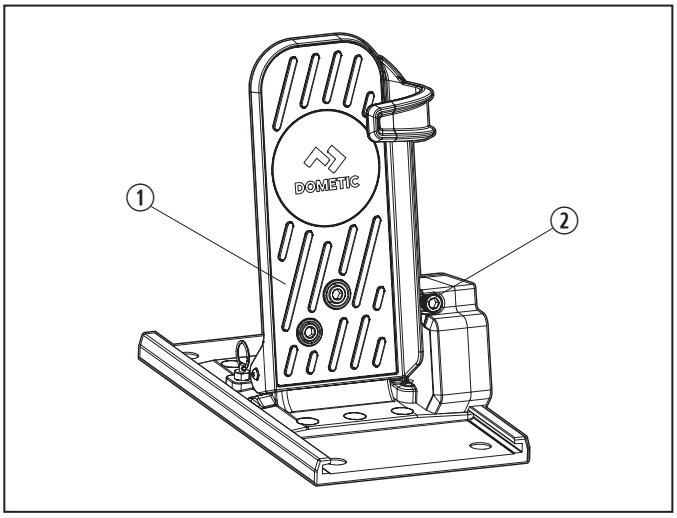

7 Adjusting the Idle

① Pedal ② Idle Adjustment Screw

1. Turn off the engine and shift into neutral.
2. Turn the idle adjustment screw clockwise to lower the pedal's starting idle position.

7 Maintenance

WARNING: CONTROL HAZARD. Failure to obey these warnings could result in death or serious injury.

- The loosening or separation of one or more fasteners may cause the failure of the engine control system.
- Do **not** cover cracks in a cable with tape or other sealants. Doing so may cause the cable to fail without warning.
- Use only Dometic replacement parts and components that are specifically approved for use with the product.

The maintenance and cleaning instructions provided in this section should be performed at the intervals indicated, or as needed, depending on the use of the product. Failure to properly maintain the product may void the warranty and could result in unsafe operation. Preventive maintenance is not covered under the warranty.

- After a few hours of operation and at frequent intervals thereafter, check all fasteners and the complete engine control system for secureness and integrity.
- Keep all moving parts free from the build-up of salt and other foreign material. This will affect their operation and create control problems.
- Periodically inspect the engine control for corrosion. Replace any parts affected by corrosion.
- Periodically treat exposed metal components with a MARINE GRADE WAX.

8 Disposal

Place the packaging material in the appropriate recycling waste bins, whenever possible. Consult a local recycling center or specialist dealer for details about how to dispose of the product in accordance with all applicable national and local regulations.

9 Warranty Information

LIMITED TWO-YEAR WARRANTY AVAILABLE AT WWW.SEASTARSOLUTIONS.COM/SUPPORT-2/WARRANTY-2/SEASTAR-SOLUTIONS-WARRANTY.

IF YOU HAVE QUESTIONS, OR TO OBTAIN A COPY OF THE LIMITED WARRANTY FREE OF CHARGE, CONTACT:

DOMETIC CORPORATION: SEASTAR SOLUTIONS
640 NORTH LEWIS ROAD
LIMERICK, PENNSYLVANIA 19468
1-610-495-7011

TS.MECHANICAL@DOMETIC.COM

10 Mounting Template

NOTICE: The following template is provided for informational purposes and is not to scale. Check all the dimensions before cutting or drilling.

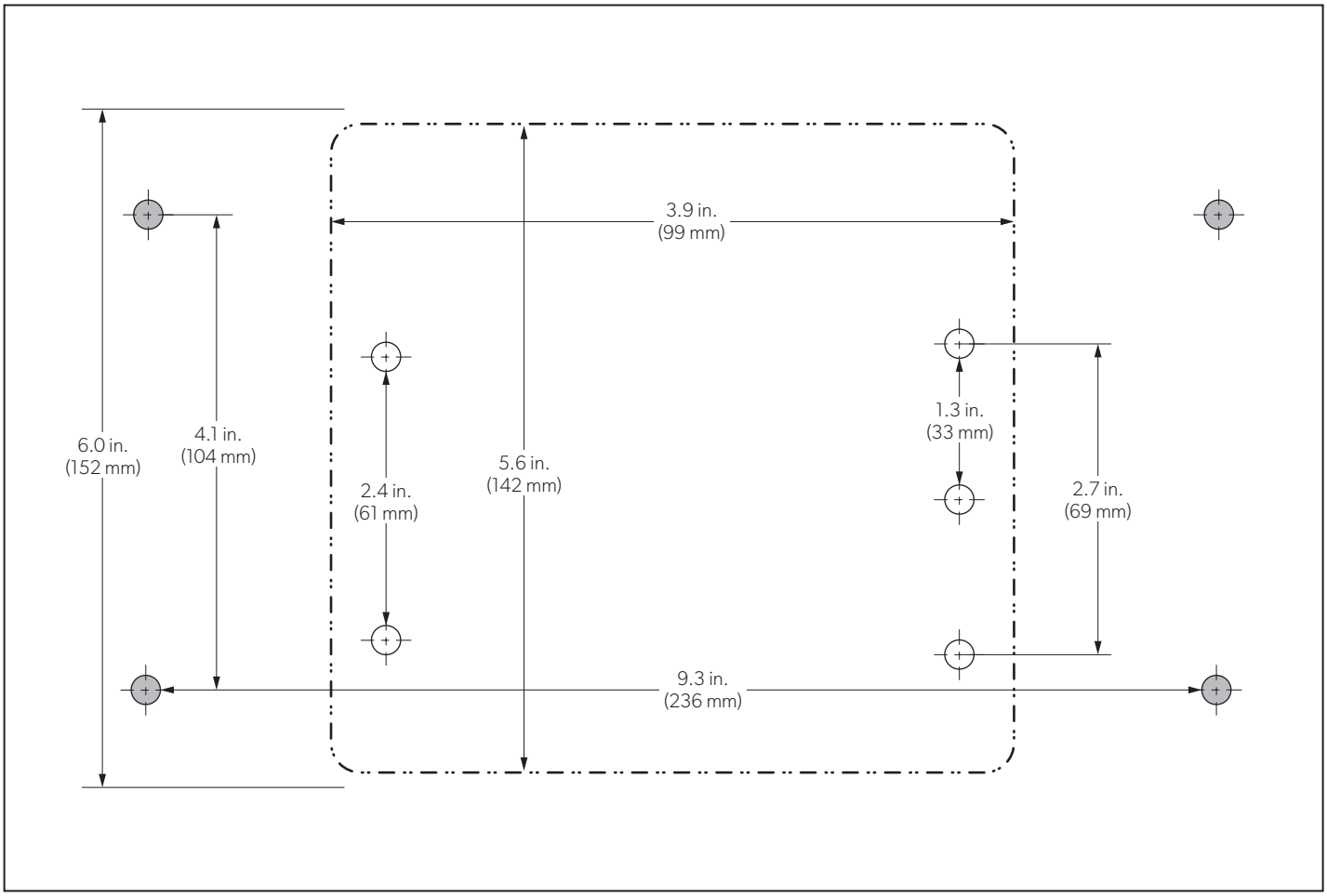

Hole location for mounting the engine control directly to the boat deck

Hole location for mounting the engine control with a slide mount

dometic.com

CONTACT US

dometic.com/en-us/terms-and-conditions-consumer/contact-us

A complete list of Dometic companies, which comprise the Dometic Group, can be found in the public filings of:
DOMETIC GROUP AB Hemvärnsgatan 15 SE-17154 Solna Sweden