DOMETIC

HOT PRODUCTS COOKTOP

EN

20E071 Recall Remedy – Manifold Bolt and Valve Seal Replacement

Service Kit Instructions

USA & CANADA
Service Office
Dometic Corp.
5155 Verdant Dr.
Elkhart, IN 46516

Service Center & Dealer Locations
Visit:
www.dometic.com

Recall Remedy Questions?
888-943-4905 /
574-389-3713
recall@dometic.com

Cooktop Models	Service Kit Number
R1731	57725
R2131	
S31	

Kit Contents	Description
57723	Recall Remedy – Manifold Bolt and Valve Seal Replacement Service Kit Instructions
57722	Threadlocker Bolts (4)
57724	Bell Washer (4)
57721	Valve Seal (3)
57727	Orange Stickers (2)
57226	Recall Response Card

1 Explanation of Symbols and Safety Instructions

This manual has safety information and instructions to help you eliminate or reduce the risk of accidents and injuries.

1.1 Recognize Safety Information

This is the safety alert symbol. It is used to alert you to potential physical injury hazards. Obey all safety messages that follow this symbol to avoid possible injury or death.

1.2 Understand Signal Words

A signal word will identify safety messages and property damage messages, and it will indicate the degree or level of hazard seriousness.

WARNING
This indicates a hazardous situation that, if **not** avoided, could result in death or serious injury.

CAUTION
This indicates a hazardous situation that, if **not** avoided, could result in minor or moderate injury.

NOTICE: Used to address practices **not** related to physical injury.

Indicates additional information that is **not** related to physical injury.

2 Recommended Tool List

Dometic Corporation recommends that the following tools be used to complete this recall remedy.

Recommended Tools and Materials	
Square Bit Driver	5/16 in. Socket Wrench
Torque Wrench (0–40 in-lbs)	Manometer

3 Recall Remedy Qualification

WARNING: FIRE AND/OR EXPLOSION HAZARD. Failure to obey the following warnings could result in death or serious injury:

- This recall remedy should only be implemented by a qualified service technician.
- Turn off the gas supply before initiating any part of this recall remedy. Failure to obey this warning could result in death or serious injury.

CAUTION: LIFTING HAZARD.
Use a sturdy prop or a second person to hold up the cooktop. Failure to obey this warning could result in minor or moderate injury.

NOTICE: Do **not** move the cooktop by pulling on the grate. Otherwise, damage to the cooktop could occur.

The images used in this document are for reference purposes only. Components and locations may vary according to specific cooktop models.

Before replacing any parts, verify your cooktop is part of the **National Highway Traffic Safety Administration (NHTSA) 20E071** recall campaign.

3.1 Remove Center Burner Knob

Before replacing any parts, verify your cooktop has not already had this recall remedy performed.

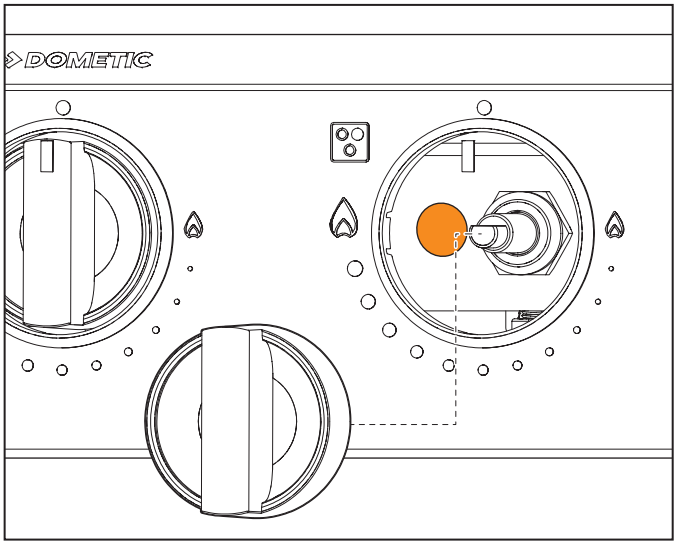

1 Look for Orange Sticker

1. Remove the knob on the center burner of the cooktop.
2. Look for an orange sticker on the bracket behind the knob.
   a. If there is an orange sticker, then your cooktop has already had the recall remedy installed. Place the knob back on the center burner and you are done.
   b. If there is not an orange sticker, then proceed with the next step of the recall remedy qualification.

3.2 Lift the Cooktop

The model and serial numbers, that determine whether your cooktop is part of the recall campaign, are located on a nameplate on the underside of the cooktop.

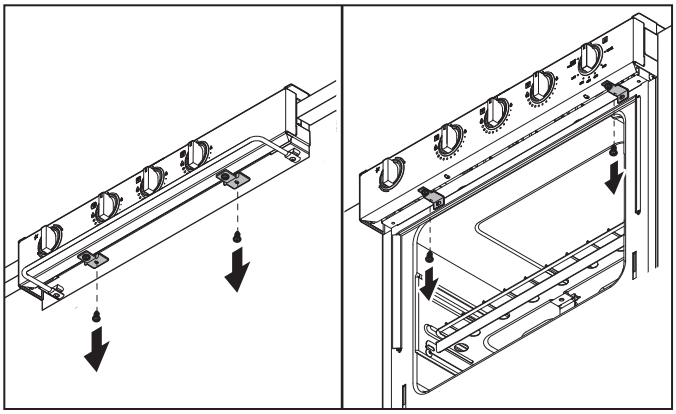

2 Remove the Cooktop Screws

1. Using a square bit driver, remove the two screws securing the cooktop brackets. Retain the screws for reassembly.

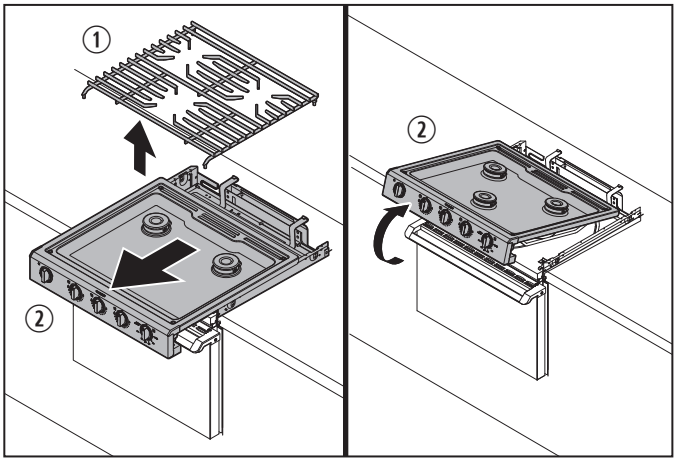

3 Remove the Cooktop

① Grate ② Cooktop

2. Remove the grate.

3. Pull the cooktop forward and lift. Use a sturdy prop or a second person to hold up the cooktop to avoid a safety hazard.

3.3 Locate the Model and Serial Number

If your cooktop is not one of the models listed and is not in the specified serial number range, then this service kit does not apply to your cooktop.

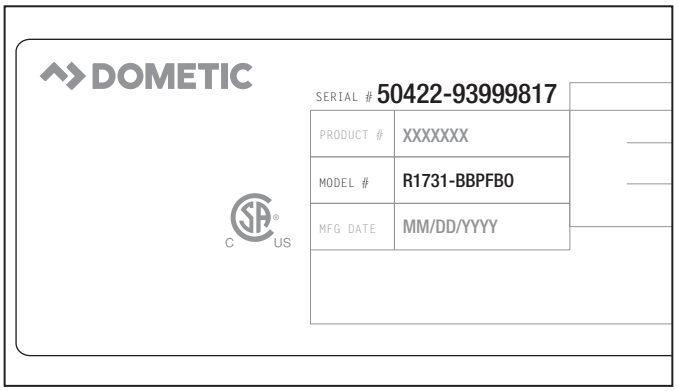

4 Locate the Model and Serial Number

Find the model number and serial number of your cooktop.

1. Locate the nameplate on the underside of the cooktop, visible when the cooktop is raised.
2. Find the model number and record it for later use.
3. Verify the model number is S31, R1731, or R2131.
   a. If it is not, then your cooktop does not qualify for this recall remedy. Proceed to "Reassemble the Cooktop" on page 4 and then you are finished.
   b. If it is, then your cooktop may qualify for this recall remedy. Proceed to the next step.
4. Find the serial number and record it for later use.

Model	Serial Number Range
S31	SU82200001 – SU83900100 SU93400001 – SU93400100 SU93600001 – SU93600300 SU02100001 – SU02100100
R1731 and R1231	81897193 – 02799381

5. Verify the serial number falls in the range of affected cooktops for your model.
   a. If it does not, then your cooktop does not qualify for this recall remedy. Proceed to "Reassemble the Cooktop" on page 4 and then you are finished.
   b. If it does, then your cooktop qualifies for this recall remedy. Proceed to "Replacement" on page 3.

If you are unsure, then call the phone numbers on the cover of this recall remedy or go to www.dometic.com to confirm whether your cooktop is on the list of recalled units.

4 Replacement

This section describes how to replace the manifold bolts and valve seals in the cooktop.

4.1 Remove the Manifold Pipe

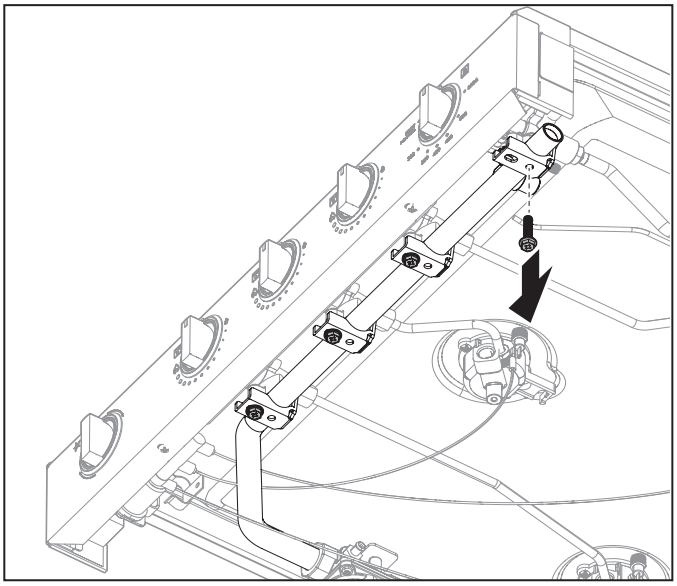

5 Remove the Manifold Pipe

The manifold pipe must be lowered to access the valves.

1. Using a socket wrench, remove the four manifold bolts.
2. Lower the manifold pipe from the burner valves.

4.2 Replace the Valve Seals

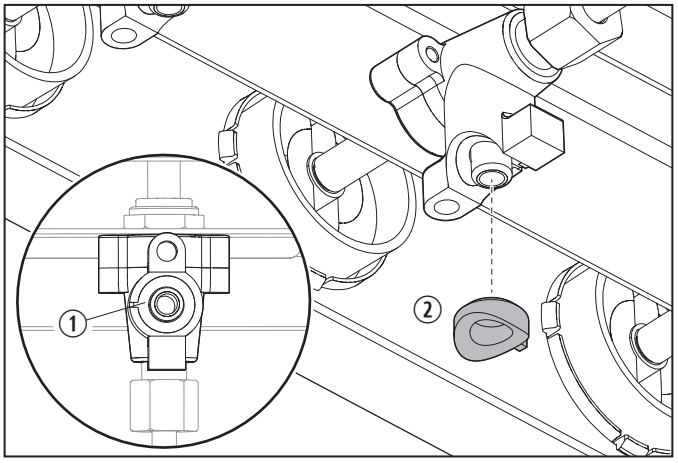

6 Replace the Valve Seal

① Valve Recess ② Valve Seal

1. For each burner valve, replace the black valve seal with a red valve seal (provided). Do not replace the black seal for the oven thermostat valve.
2. For the burner valves, make sure the tab on the red valve seal sets in the recess in the valve.
3. Dispose of the removed black valve seals and manifold bolts according to "Disposal" on page 5.

4.3 Reassemble the Manifold Pipe

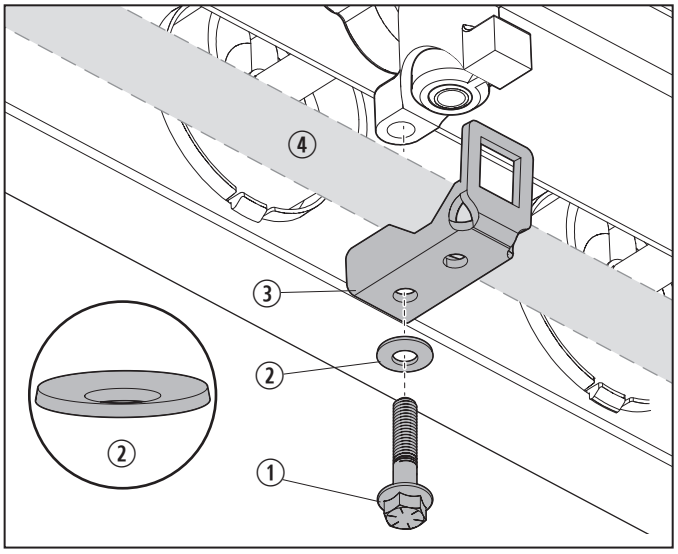

7 Install the Bell Washers

① Threadlocker Bolt ③ Manifold Bracket
② Bell Washer ④ Manifold Pipe

1. Place a bell washer (provided) over each of the four threadlocker bolts (provided). Make sure the bell washer is placed in the correct orientation as shown in Figure 7.
2. Assemble the manifold bracket to each valve while turning the threadlocker bolts finger tight.
3. Torque each threadlocker bolt to 15–20 in-lbs with a torque wrench.

Exceeding recommended torque could damage components and cause a possible gas leak.

5 Perform a Leak Test

Before reassembling the cooktop, perform a leak test.

1. Check all gas line connections for tightness, including the connection at the back of the range and regulator, before conducting the leak test.
2. Turn on the gas supply.
3. Pressurize the range with propane at 11 inches water column.
4. Spray the manifold around the replaced seals with a mixture of soap and water.
5. Ensure there are no bubbles. Observe for a minimum of 1 minute.
6. Reduce the pressure to 8 inches water column and isolate the range and pressure gauge from the supply.
7. Observe the pressure for 3 minutes and ensure there is zero drop in pressure.

6 Reassemble the Cooktop

1. Lower the cooktop to the base and push to slide into place.
2. Secure the cooktop brackets with the two original screws.
3. Replace the grate.

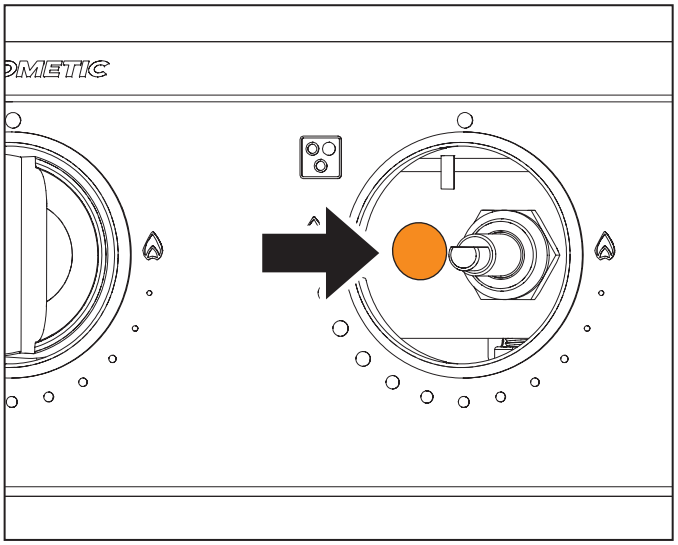

8 Place Recall Sticker

4. If this recall remedy was performed on a compatible unit in an RV, then:
   a. Place an orange sticker (provided) on the bracket behind the center burner knob.
   b. Place the knob on the center burner.
5. If this recall remedy was performed on a compatible unit that is still in its original packaging from Dometic, then:
   a. Attach the second orange sticker to the label on the outside of the box near the unit model and serial number.
   b. Otherwise, dispose of the second sticker.

7 Fill Out the Recall Response Card

The information on the recall response card is vital to proper record keeping and reporting to NHTSA. This information helps confirm that Dometic, the Original Equipment Manufacturer (OEM), and the dealer are complying with federal law and collecting the proper records for reporting.

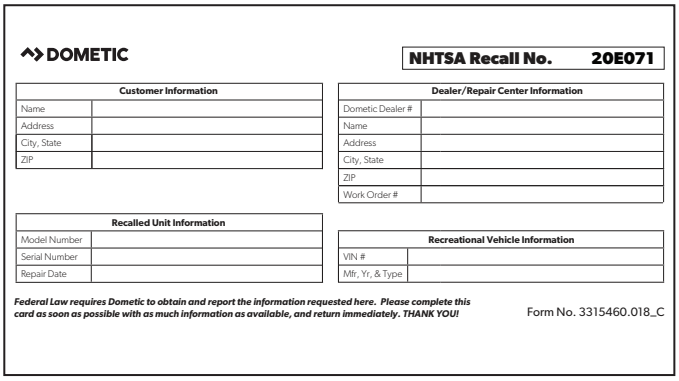

DOMETIC

NHTSA Recall No. 20E071

Customer Information	
Name	
Address	
City, State	
ZIP	

Dealer/Repair Center Information	
Dometic Dealer #	
Name	
Address	
City, State	
ZIP	
Work Order #	

Recalled Unit Information	
Model Number	
Serial Number	
Repair Date	

Recreational Vehicle Information	
VIN #	
Mfr, Yr, & Type	

Federal Law requires Dometic to obtain and report the information requested here. Please complete this card as soon as possible with as much information as available, and return immediately. THANK YOU!

Form No. 3315460.018_C

9 Recall Response Card

The installer of this recall remedy kit is required to complete the recall response card (provided):

1. **Customer Information** – Provide the contact information of the end user/owner of the RV which has the cooktop. If the unit is still in its original packaging and not installed in an RV, write N/A.
2. **Dealer/Repair Center Information** – Provide the Dometic dealer number or repair center number, whichever is applicable, as well as the contact information. Also provide the work order number (if applicable), otherwise use the last name and first name of the retail customer.
3. **Recalled Unit Information** – Provide the cooktop model number and serial number (recorded earlier) and the repair date.
4. **Recreational Vehicle Information** – Provide the RV manufacturer, model, serial number, and vehicle identification number (VIN). If the unit is still in its original packaging and not installed in an RV, write N/A.
5. Return the completed recall response card to the Dometic Service Office.

8 Disposal

Place the packaging material in the appropriate recycling waste bins, whenever possible. Consult a local recycling center or specialist dealer for details about how to dispose of the product in accordance with all applicable national and local regulations.