DOMETIC

PORTABLE REFRIGERATION
CDF SERIES

CDF 11

EN **Compressor Cooler**
Operating manual

Please read this operating manual carefully before starting the device. Keep it in a safe place for future reference. If the device is passed on to another person, this operating manual must be handed over to the user along with it.

The manufacturer cannot be held liable for damage resulting from **improper usage** or **incorrect operation**.

Contents

1 Explanation of symbols 4
2 Safety instructions 5
3 Scope of delivery 7
4 Intended use 7
5 Technical description 8
6 Operation 11
7 Cleaning and maintenance 16
8 Troubleshooting 17
9 Guarantee 18
10 Disposal 18
11 Technical data 19

1 Explanation of symbols

WARNING!
Safety instruction: Failure to observe this instruction can cause fatal or serious injury.

CAUTION!
Safety instruction: Failure to observe this instruction can lead to injury.

NOTICE!
Failure to observe this instruction can cause material damage and impair the function of the product.

NOTE
Supplementary information for operating the product.

2 Safety instructions

2.1 General safety

WARNING!

- Do not operate the cooling device if it is visibly damaged.
- If this cooling device's power cable is damaged, it must be replaced by the manufacturer, customer service or a similarly qualified person in order to prevent safety hazards.
- This cooling device may only be repaired by qualified personnel. Improper repairs can lead to considerable hazards.
- This cooling device can be used by children aged 8 years or over, as well as by persons with diminished physical, sensory or mental capacities or a lack of experience and/or knowledge, providing they are supervised or have been taught how to use the cooling device safely and are aware of the resulting risks.
- Cleaning and user maintenance must not be carried out by children without supervision.
- Children must not play with the cooling device.
- Children must be supervised to ensure that they do not play with the cooling device.
- Always keep and use the cooling device out of the reach of children under the age of 8 years.
- Do not store any explosive substances such as spray cans with a flammable propellant in the cooling device.

CAUTION!

- Disconnect the cooling device from the power supply
  - before each cleaning and maintenance
  - after every use
- Food may only be stored in its original packaging or in suitable containers.

NOTICE!

- Check that the voltage specification on the type plate corresponds to that of the energy supply.
- Only connect the cooling device to a DC power supply in the vehicle with the DC cable.

- Never pull the plug out of the socket by the cable.
- Disconnect the cooling device and other power consuming devices from the battery before connecting a quick charging device.
- Disconnect the cooling device or switch it off when you turn off the engine. Otherwise you may discharge the battery.
- The cooling device is not suitable for transporting caustic materials or materials containing solvents.
- The insulation of the cooling device contains flammable cyclopentane and requires special disposal procedures. Deliver the cooling device at the end of its life-cycle to an appropriate recycling.

2.2 Operating the cooling device safely

CAUTION!

- Before starting the cooling device, ensure that the power supply line and the plug are dry.

NOTICE!

- Do not use electrical devices inside the cooling device unless they are recommended by the manufacturer for the purpose.
- Do not place the cooling device near naked flames or other heat sources (heaters, direct sunlight, gas ovens etc.).
- **Danger of overheating!**
  Ensure at all times that there is sufficient ventilation so that the heat that arises during operation does not build up. Make sure that the cooling device is sufficiently far away from walls and other objects so that the air can circulate.
- Ensure that the ventilation openings are not covered.
- Do not fill the inner container with ice or fluid.
- Never immerse the cooling device in water.
- Protect the cooling device and the cable against heat and moisture.

3 Scope of delivery

- Cooling device
- Connection cable for 12/24 V⎓ connection
- Carry strap

4 Intended use

The cooler CDF11 is suitable for cooling and freezing foodstuffs.

The cooler is designed to be operated from:

- a DC on-board power supply of a vehicle, boat or caravan
- a DC auxiliary battery

The appliance may also be used for camping use. The appliance shall not be exposed to rain.

CAUTION! Health hazard!
Please check if the cooling capacity of the device is suitable for storing the food or medicine you wish to cool.

NOTE
To operate the device using a 220 – 240 V~ mains supply, we recommend using a rectifier (**accessory**).

5 Technical description

The cooler can chill products, keep them cool as well as freeze them. A maintenance-free refrigerant circuit with compressor provides the cooling.

The cooler is suitable for mobile use.

When used in vehicles the cooler can be secured with the seat belt.

If an error occurs within the interior electronics, the cooling can be kept by using an emergency switch.

5.1 Description of the device

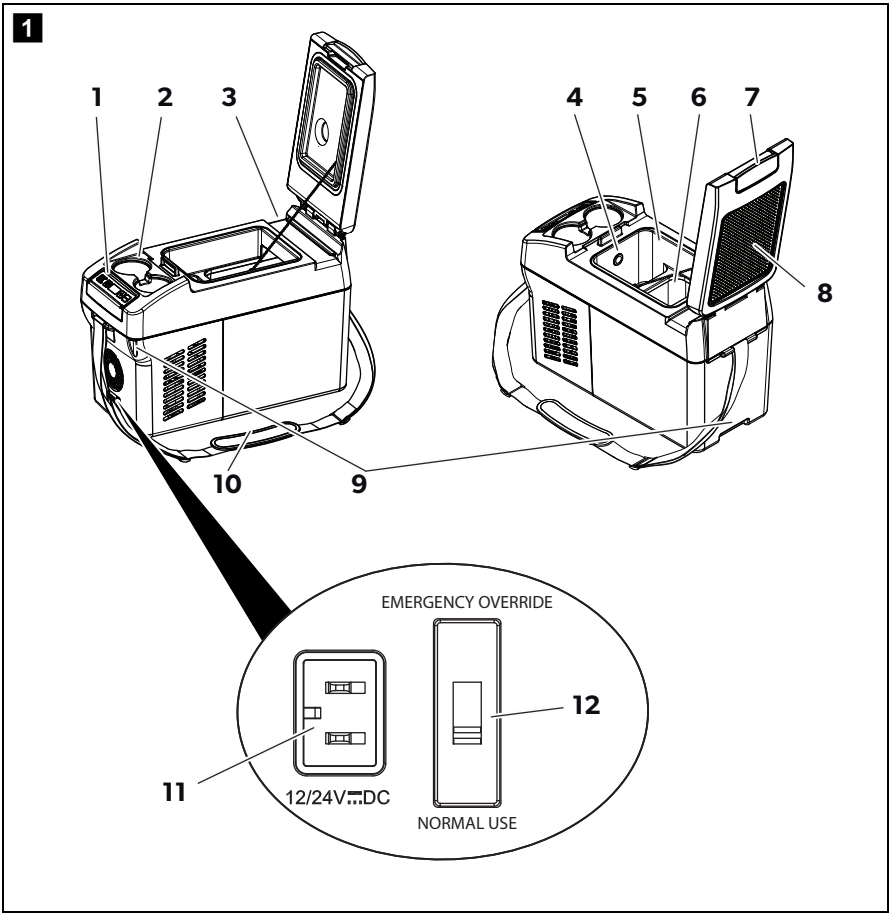

Item	Description
1	Control panel
2	Cup holder
3	Fixing position for seat belt
4	Interior LED light
5	Cooling compartment
6	Freezer compartment
7	Lock
8	Skid proof pad
9	Handles
10	Carry strap
11	Connection socket
12	Emergency switch

5.2 Control panel

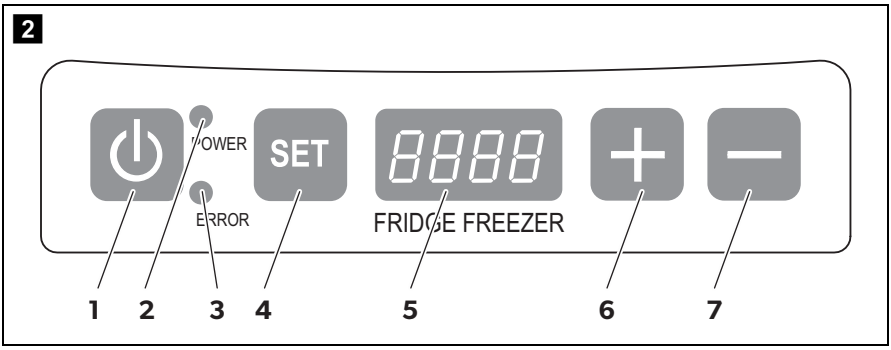

Item	Description	Explanation	
1	On/Off button	Switches the cooler on or off when the button is pressed for between one and two seconds	
2	POWER	Status indication	
		LED lights up green	Compressor is on; preset temperature isn't reached yet
		LED lights up orange	Preset temperature is reached
		LED flashes orange	Insufficient voltage
3	ERROR	LED flashes red	Device is switched on but not ready for operation
4	SET	Selects the input mode • Set Temperature • Set temperature unit (Celsius or Fahrenheit) • Set battery monitor	
5	Display	Shows the temperature inside the cooling compartment The first three digits of the four-digit display show the temperature, the fourth digit shows the temperature unit (°C or °F). In case of an error the display shows the error message "Err1" or "Err2".	
6	+	Press once to increase the value	
7	–	Press once to decrease the value	

6 Operation

The device is equipped with an interior LED light which remains on whenever power is connected. The power consumption of this LED light is extremely low and insignificant compared to the overall power consumption of the device.

6.1 Before initial use

NOTE
Before starting your new cooling device for the first time, you should clean it inside and outside with a damp cloth for hygienic reasons (please also refer to the chapter "Cleaning and maintenance" on page 16).

6.2 Energy saving tips

- Choose a well ventilated installation location which is protected against direct sunlight.
- Allow warm food to cool down first before placing it in the cooling device to keep cool.
- Do not open the cooling device more often than necessary.
- Do not leave the cooling device open for longer than necessary.
- Defrost the cooler once a layer of ice forms.
- Avoid unnecessarily low temperatures.

6.3 Locking the cooler

➤ Close the lid.

➤ Press the lock (fig. 1 7, page 8) down until it snaps in audibly.

6.4 Securing the cooler in the vehicle

➤ Open the lid of the cooler.

➤ Place the seat belt into the fixing position (fig. 1 3, page 8) of the cooler.

➤ Close the lid.

➤ Fasten the seat belt and tighten it.

6.5 Connecting the cooler

NOTICE! Danger of damage!

- Disconnect the cooler and other consumer units from the battery before you connect the battery to a quick charging device. Overvoltage can damage the electronics of the device.
- For protection of the device the DC cable supplied includes a fuse inside the plug. Do **not** remove the fused DC plug. Only use the DC cable supplied.

NOTE

If you connect the cooling device to the vehicle power, remember that you may have to turn on the ignition to supply it with power.

The cooler can be operated with 12 V or 24 V⎓.

For safety reasons the cooler is equipped with an electronic system to prevent polarity reversal. This protects the cooler against short-circuiting when connecting to a battery.

➤ Plug the DC connection cable into the DC voltage socket of the cooler.

➤ Connect the connection cable to a DC power outlet.

6.6 Using the battery monitor

The device is equipped with a multi-level battery monitor that protects your vehicle battery against excessive discharging when the device is connected to the on-board DC supply.

If the cooler is operated when the vehicle ignition is switched off, the cooler switches off automatically as soon as the supply voltage falls below a set level. The cooler will switch back on once the battery has been recharged to the restart voltage level.

NOTICE! Danger of damage!

When switched off by the battery monitor, the battery will no longer be fully charged. Avoid starting repeatedly or operating current consumers without longer charging phases. Ensure that the battery is recharged.

In “HIGH” mode, the battery monitor responds faster than at the levels “LOW” and “MED” (see the following table).

Battery monitor mode	LOW	MED	HIGH
Switch-off voltage at 12 V	10.1 V	11.4 V	11.8 V
Restart voltage at 12 V	11.1 V	12.2 V	12.6 V
Switch-off voltage at 24 V	21.5 V	24.1 V	24.6 V
Restart voltage at 24 V	23.0 V	25.3 V	26.2 V

This is how to select the battery monitor mode:

➤ Switch on the cooler.

➤ Press the “SET” button three times.

➤ Use the “+” and “–” buttons to select the battery monitor mode.

✓ Display will be as follows:
Lo (LOW), ПEd (MED) or HI (HIGH)

✓ The selected mode then appears in the display for a few seconds. The display flashes several times before it returns to the current temperature.

NOTE
When the cooler is supplied by the starter battery, select the battery monitor mode “HIGH”. If the cooler is connected to a supply battery, the battery monitor mode “LOW” will suffice.

6.7 Using the cooler

NOTICE! Danger of overheating!
Ensure at all times that there is sufficient ventilation so that the heat that generated during operation can dissipate. Ensure that the ventilation slots are not covered. Make sure that the device is sufficiently far away from walls and other objects so that the air can circulate.

➤ Place the cooler on a firm foundation.
Make sure that the ventilation slots are not covered and that the heated air can dissipate.

➤ Connect the cooler, see chapter “Connecting the cooler” on page 12.

NOTICE! Danger from excessively low temperature!
Ensure that the only those objects are placed in the cooler that are intended to be cooled at the selected temperature.

NOTE
During normal operation the emergency switch (fig. 1 12, page 8) has to be set to the "Normal" position.

➤ Press the "ON/OFF" (fig. 2 1, page 10) button for three seconds.

✓ The "POWER" LED (fig. 2 2, page 10) lights up green.
When the cooler reaches the preset temperature, the LED lights up orange.

✓ The display (fig. 2 5, page 10) switches on and shows the current cooling temperature.

✓ The cooler starts cooling the interior.

6.8 Setting the temperature

➤ Press the "SET" button once.

➤ Use the "+" and "–" buttons to select the cooling temperature.

✓ The cooling temperature appears in the display for a few seconds. The display flashes several times and then the current temperature is displayed again.

6.9 Selecting the temperature units

You can switch the temperature display between Celsius and Fahrenheit. This is how to do it:

➤ Switch on the cooler.

➤ Press the "SET" button twice.

➤ Use the "+" and "–" buttons to select Celsius or Fahrenheit.

✓ The selected temperature units then appear in the display for a few seconds. The display flashes several times before it returns to the current temperature.

6.10 Using the emergency switch

The emergency switch (fig. 1 12, page 8) is located below the control panel . For normal operation the switch is in the "NORMAL USE" position.

➤ If an electronic control failure occurs, slide the switch to "EMERGENCY OVERRIDE" position

NOTE
If the switch is in the "EMERGENCY OVERRIDE" position, the cooler runs with full cooling capacity and may freeze.

6.11 Switching off the cooler

➤ Empty the cooler.

➤ Switch the cooler off: Press the "ON/OFF" button for three seconds.

➤ Pull out the connection cable.

If you do not want to use the cooler for a longer period of time:

➤ Leave the cover slightly open. This prevents odour build-up.

6.12 Defrosting the cooler

Humidity can form frost in the interior of the cooling device or on the vaporiser. This reduces the cooling capacity. Defrost the device in good time to avoid this.

NOTICE! Danger of damaging the device!
Never use hard or pointed tools to remove ice or to loosen objects which have frozen in place.

To defrost the cooler, proceed as follows:

➤ Take out the contents of the cooling device.

➤ If necessary, place them in another cooling device to keep them cool.

➤ Switch off the device.

➤ Leave the cover open.

➤ Wipe off the defrosted water.

6.13 Replacing the DC plug fuse

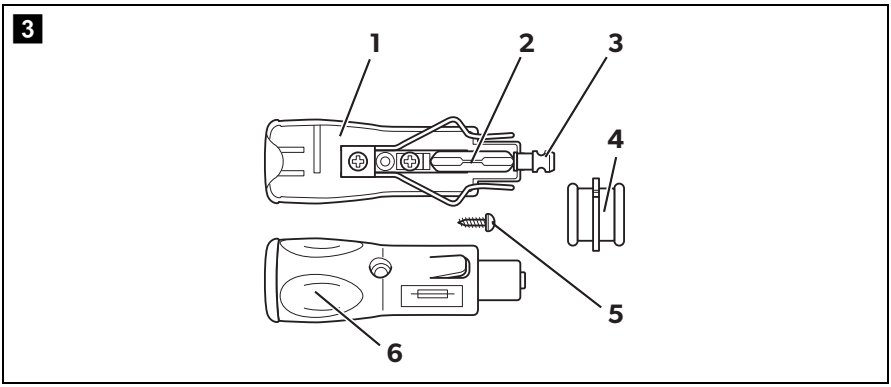

➤ Pull the adapter sleeve (**4**) off of the plug.

➤ Unscrew the screw (**5**) out of the upper half of the housing (**6**).

➤ Carefully raise the upper half of the housing from the lower (**1**) half.

➤ Take out the contact pin (**3**).

➤ Replace the defective fuse (**2**) with a new one that has the same rating (T8A 32V).

➤ Re-assemble the plug in the reverse order.

7 Cleaning and maintenance

WARNING!
Always disconnect the device from the power supply before you clean and service it.

NOTICE! Risk of damage
- Never clean the cooler under running water or in dish water.
- Do not use abrasive cleaning agents or hard objects during cleaning as these can damage the cooler.

➤ Occasionally clean the device interior and exterior with a damp cloth.

➤ Make sure that the air inlet and outlet vents on the device are free of any dust and dirt, so that heat can be released and the device is not damaged.

8 Troubleshooting

Fault	Possible cause	Suggested remedy
Device does not function, “POWER” LED does not glow.	No voltage was detected in the DC power outlet.	In most vehicles the ignition must be turned on before power will be supplied to the DC power outlet.
The device does not cool (plug is inserted, “POWER” LED is lit).	Defective compressor.	This can only be repaired by an authorised repair centre.
The device does not cool (plug is inserted, “POWER” LED flashes, the display is blank).	Battery monitor is set too high.	Select a lower battery monitor setting.
	Battery voltage is too low.	Test the battery and charge it as needed. Check the wiring and connections.
When operating from the DC outlet: The ignition is on and the device is not working and the “POWER” LED is not lit. Pull the plug out of the socket and make the following checks.	The DC outlet is dirty. This results in a poor electrical contact.	If the plug of your cooler becomes very warm in the DC outlet, either the DC outlet must be cleaned or the plug has not been assembled correctly.
	The fuse of the DC plug has blown.	Replace the fuse in the DC plug, see chapter “Replacing the DC plug fuse” on page 16.
	The vehicle fuse has blown.	Replace the vehicle’s DC outlet fuse. Please refer to your vehicle’s operating manual.
“ERROR” LED flashes and the display shows “ERR1” or “ERR2”.	Device is defective.	This can only be repaired by an authorised repair centre.

9 Guarantee

The statutory warranty period applies. If the product is defective, please contact the manufacturer's branch in your country (see the back of the instruction manual for the addresses) or your retailer.

For repair and guarantee processing, please include the following documents when you send in the device:

- A copy of the receipt with purchasing date
- A reason for the claim or description of the fault

10 Disposal

➤ Place the packaging material in the appropriate recycling waste bins wherever possible.

If you wish to finally dispose of the product, ask your local recycling centre or specialist dealer for details about how to do this in accordance with the applicable disposal regulations.

11 Technical data

	CDF11
Ref. no.:	9105330684
Connection voltage:	12/24 V⎓
Cooling capacity:	+10 °C to –18 °C
Power consumption:	max. 30 W
Storage capacity:	10.5 litres
Climate class:	T
Ambient temperature:	16 °C to 43 °C
Refrigerant quantity:	28 g
CO_2 equivalent:	0.040 t
Global warming potential (GWP):	1430
Dimensions (W x H x D):	235 x 358 x 540 mm
Weight:	8.2 kg
Testing/certification:	E4

NOTE
If the ambient temperature is above +32 °C (+90 °F), the minimum temperature cannot be attained.

The coolant circuit contains R134a.

Contains fluorinated greenhouse gases

Hermetically sealed equipment

AUSTRALIA
Dometic Australia Pty. Ltd.
1 John Duncan Court · Varsity Lakes QLD 4227
☎ 1800 212121 · 🖷 +61 7 55076001
Mail: sales@dometic.com.au

dometic.com

DOMETIC

AUSTRIA
Dometic Austria GmbH
Neudorferstraße 108
A-2353 Guntramsdorf
☎ +43 2236 908070
🖷 +43 2236 90807060
Mail: info@dometic.at

BENELUX
Dometic Branch Office Belgium
Zincstraat 3
B-1500 Halle
☎ +32 2 3598040
🖷 +32 2 3598050
Mail: info@dometic.be

BRAZIL
Dometic DO Brasil LTDA
Avenida Paulista 1754, conj. 111
SP 01310-920 Sao Paulo
☎ +55 11 3251 3352
🖷 +55 11 3251 3362
Mail: info@dometic.com.br

DENMARK
Dometic Denmark A/S
Nordensvej 15, Taulov
DK-7000 Fredericia
☎ +45 75585966
🖷 +45 75586307
Mail: info@dometic.dk

FINLAND
Dometic Finland OY
Mestarintie 4
FIN-01730 Vantaa
☎ +358 20 7413220
🖷 +358 9 7593700
Mail: info@dometic.fi

FRANCE
Dometic SAS
ZA du Pré de la Dame Jeanne
B.P. 5
F-60128 Plailly
☎ +33 3 44633525
🖷 +33 3 44633518
Mail : vehiculesdeloisirs@dometic.fr

GERMANY
Dometic WAECO International GmbH
Hollefeldstraße 63
D-48282 Emsdetten
☎ +49 (0) 2572 879-195
🖷 +49 (0) 2572 879-322
Mail: info@dometic-waeco.de

HONG KONG
Dometic Group Asia Pacific
Suites 2207-11 · 22/F · Tower 1
The Gateway · 25 Canton Road,
Tsim Sha Tsui · Kowloon
☎ +852 2 4611386
🖷 +852 2 4665553
Mail: info@waeco.com.hk

HUNGARY
Dometic Zrt. Sales Office
Kerékgyártó u. 5.
H-1147 Budapest
☎ +36 1 468 4400
🖷 +36 1 468 4401
Mail: budapest@dometic.hu

ITALY
Dometic Italy S.r.l.
Via Virgilio, 3
I-47122 Forlì (FC)
☎ +39 0543 754901
🖷 +39 0543 754983
Mail: vendite@dometic.it

JAPAN
Dometic KK
Maekawa-Shibaura, Bldg. 2
2-13-9 Shibaura Minato-ku
Tokyo 108-0023
☎ +81 3 5445 3333
🖷 +81 3 5445 3339
Mail: info@dometic.jp

MEXICO
Dometic Mx, S. de R. L. de C. V.
Circuito Médicos No. 6 Local 1
Colonia Ciudad Satélite
CP 53100 Naucalpan de Juárez
Estado de México
☎ +52 55 5374 4108
🖷 +52 55 5393 4683
Mail: info@dometic.com.mx

NETHERLANDS
Dometic Benelux B.V.
Ecustraat 3
NL-4879 NP Etten-Leur
☎ +31 76 5029000
🖷 +31 76 5029019
Mail: info@dometic.nl

NEW ZEALAND
Dometic New Zealand Ltd.
PO Box 12011
Penrose
Auckland 1642
☎ +64 9 622 1490
🖷 +64 9 622 1573
Mail: customerservices@dometic.co.nz

NORWAY
Dometic Norway AS
Østerøyveien 46
N-3232 Sandefjord
☎ +47 33428450
🖷 +47 33428459
Mail: firmapost@dometic.no

POLAND
Dometic Poland Sp. z o.o.
Ul. Puławska 435A
PL-02-801 Warszawa
☎ +48 22 414 3200
🖷 +48 22 414 3201
Mail: info@dometic.pl

PORTUGAL
Dometic Spain, S.L.
Branch Office em Portugal
Rot. de São Gonçalo nº 1 – Esc. 12
2775-399 Carcavelos
☎ +351 219 244 173
🖷 +351 219 243 206
Mail: info@dometic.pt

RUSSIA
Dometic RUS LLC
Komsomolskaya square 6-1
RU-107140 Moscow
☎ +7 495 780 79 39
🖷 +7 495 916 56 53
Mail: info@dometic.ru

SINGAPORE
Dometic Pte Ltd
18 Boon Lay Way 06–140 Trade Hub 21
Singapore 609966
☎ +65 6795 3177
🖷 +65 6862 6620
Mail: dometic@dometic.com.sg

SLOVAKIA
Dometic Slovakia s.r.o. Sales Office Bratislava
Nádražná 34/A
900 28 Ivanka pri Dunaji
☎/🖷 +421 2 45 529 680
Mail: bratislava@dometic.com

SOUTH AFRICA
Dometic (Pty) Ltd.
Regional Office
South Africa & Sub-Saharan Africa
Unit 6-7 on Mastiff Linbro Park
2008 Johannesburg
☎ +27 11 4504978
🖷 +27 11 4504976
Mail: info@dometic.co.za

SPAIN
Dometic Spain S.L.
Avda. Sierra del Guadarrama, 16
E-28691 Villanueva de la Cañada
Madrid
☎ +34 902 111 042
🖷 +34 900 100 245
Mail: info@dometic.es

SWEDEN
Dometic Scandinavia AB
Gustaf Melins gata 7
S-42131 Västra Frölunda
☎ +46 31 7341100
🖷 +46 31 7341101
Mail: info@dometicgroup.se

SWITZERLAND
Dometic Switzerland AG
Riedackerstrasse 7a
CH-8153 Rümlang
☎ +41 44 8187171
🖷 +41 44 8187191
Mail: info@dometic.ch

UNITED ARAB EMIRATES
Dometic Middle East FZCO
P. O. Box 17860
S-D 6, Jebel Ali Freezone
Dubai
☎ +971 4 883 3858
🖷 +971 4 883 3868
Mail: info@dometic.ae

UNITED KINGDOM
Dometic UK Ltd.
Dometic House, The Brewery
Blandford St. Mary
Dorset DT11 9LS
☎ +44 344 626 0133
🖷 +44 344 626 0143
Mail: customerservices@dometic.co.uk

USA
Dometic RV Division
1120 North Main Street
Elkhart, IN 46515
☎ +1 574-264-2131

4445101945 10/2017