DOMETIC

# PORTABLE REFRIGERATION
# CF SERIES

CF 40SG

EN **Compressor Fridge/Freezer**
Operating manual

© 2020 Dometic Group. The visual appearance of the contents of this manual is protected by copyright and design law. The underlying technical design and the products contained herein may be protected by design, patent or be patent pending. The trademarks mentioned in this manual belong to Dometic Sweden AB. All rights are reserved.

**Please read this manual carefully before starting the device. Keep it in a safe place for future reference. If the device is passed on to another person, this manual must be handed over to the user along with it.**

The manufacturer cannot be held liable for damage resulting from **improper usage** or **incorrect operation**.

# Contents


**1 Explanation of symbols** . . . . 4

**2 Safety instructions** . . . . 4

**3 Scope of delivery** . . . . 7

**4 Intended use** . . . . 8

**5 Function description** . . . . 9
- 5.1 Scope of functions . . . . 9
- 5.2 Operating and display elements . . . . 10

**6 Operation** . . . . 12
- 6.1 Before initial use . . . . 12
- 6.2 Energy saving tips . . . . 13
- 6.3 Connecting the cooler . . . . 13
- 6.4 Using the battery monitor . . . . 14
- 6.5 Using the cooler . . . . 16
- 6.6 Setting the temperature . . . . 17
- 6.7 Using the Emergency Switch . . . . 17
- 6.8 Switching off the cooler . . . . 17
- 6.9 Defrosting the cooler . . . . 18
- 6.10 Replacing the AC fuse . . . . 18
- 6.11 Replacing the DC plug fuse . . . . 19
- 6.12 Replacing the light bulb . . . . 20

**7 Cleaning and maintenance** . . . . 20

**8 Warranty** . . . . 21

**9 Troubleshooting** . . . . 21

**10 Disposal** . . . . 22

**11 Technical data** . . . . 23

# 1 Explanation of symbols

**DANGER!**
**Safety instruction:** Indicates a hazardous situation that, if not avoided, will result in death or serious injury.

**WARNING!**
**Safety instruction:** Indicates a hazardous situation that, if not avoided, could result in death or serious injury.

**CAUTION!**
**Safety instruction:** Indicates a hazardous situation that, if not avoided, could result in minor or moderate injury.

**NOTICE!**
Indicates a situation that, if not avoided, can result in property damage.

**NOTE**
Supplementary information for operating the product.

# 2 Safety instructions

The manufacturer accepts no liability for damage in the following cases:

- Damage to the product resulting from mechanical influences and incorrect connection voltage
- Alterations to the product without express permission from the manufacturer
- Use for purposes other than those described in the operating manual

**WARNING! Failure to obey these warnings could result in death or serious injury.**

**Electrocution hazard**

- Do not operate the cooling device if it is visibly damaged.
- If this cooling device's power cable is damaged, it must be replaced by the manufacturer, customer service or a similarly qualified person in order to prevent safety hazards.

- This cooling device may only be repaired by qualified personnel. Improper repairs can lead to considerable hazards.

**Fire hazard**

- When positioning the device, ensure the supply cord is not trapped or damaged.
- Do not locate multiple portable socket-outlets or portable power supplies at the rear of the device.

**Health hazard**

- This device can be used by children aged from 8 years and above and persons with reduced physical, sensory or mental capabilities or lack of experience and knowledge if they have been given supervision or instruction concerning use of the device in a safe way and understand the hazards involved.
- Children shall not play with the device.
- Cleaning and user maintenance shall not be made by children without supervision.
- Children aged from 3 to 8 years are allowed to load and unload cooling devices.

**Explosion hazard**

- Do not store any explosive substances such as spray cans with a flammable propellant in the cooling device.

**CAUTION! Failure to obey these cautions could result in minor or moderate injury.**

**Electrocution hazard**

- Before starting the cooling device, ensure that the power supply line and the plug are dry.
- Disconnect the cooling device from the power supply
  - before each cleaning and maintenance
  - after every use

**Health hazard**

- Please check if the cooling capacity of the device is suitable for storing the food or medicine you wish to cool.
- Food may only be stored in its original packaging or in suitable containers.
- Opening the cooling device for long periods can cause significant increase of the temperature in the compartments of the device.

- Clean regularly surfaces that can come in contact with food and accessible drainage systems.
- Store raw meat and fish in suitable containers in the device, so that it is not in contact with or can drip onto other food.
- If the device is left empty for long periods:
  - Switch off the device.
  - Defrost the device.
  - Clean and dry the device.
  - Leave the lid open to prevent mould developing within the device.

**NOTICE! Damage hazard**

- Check that the voltage specification on the type plate corresponds to that of the energy supply.
- Only connect the cooling device as follows:
  - With the DC connection cable to a DC power supply in the vehicle
  - Or with the AC connection cable to an AC power supply
- Never pull the plug out of the socket by the cable.
- If the cooling device is connected to a DC outlet: Disconnect the cooling device and other power consuming devices from the battery before connecting a quick charging device.
- If the cooling device is connected to a DC outlet: Disconnect the cooling device or switch it off when you turn off the engine. Otherwise you may discharge the battery.
- The cooling device is not suitable for transporting caustic materials or materials containing solvents.
- The insulation of the cooling device contains flammable cyclopentane and requires special disposal procedures. Deliver the cooling device at the end of its life-cycle to an appropriate recycling center.
- Do not use electrical devices inside the cooling device unless they are recommended by the manufacturer for the purpose.
- Do not place the cooling device near naked flames or other heat sources (heaters, direct sunlight, gas ovens etc.).
- **Risk of overheating!**
  Ensure at all times that there is a minimum of 50 mm ventilation on all four sides of the cooling device. Keep the ventilation area free of any objects that could restrict the air flow to the cooling components.
  Do not place the cooling device in closed compartments or areas with none or minimal air flow.
- Ensure that the ventilation openings are not covered.

- Do not fill the inner container with ice or fluids.
- Never immerse the cooling device in water.
- Protect the cooling device and cables against heat and moisture.
- Protect the cooling devise from exposure to rain.

# 3 Scope of delivery

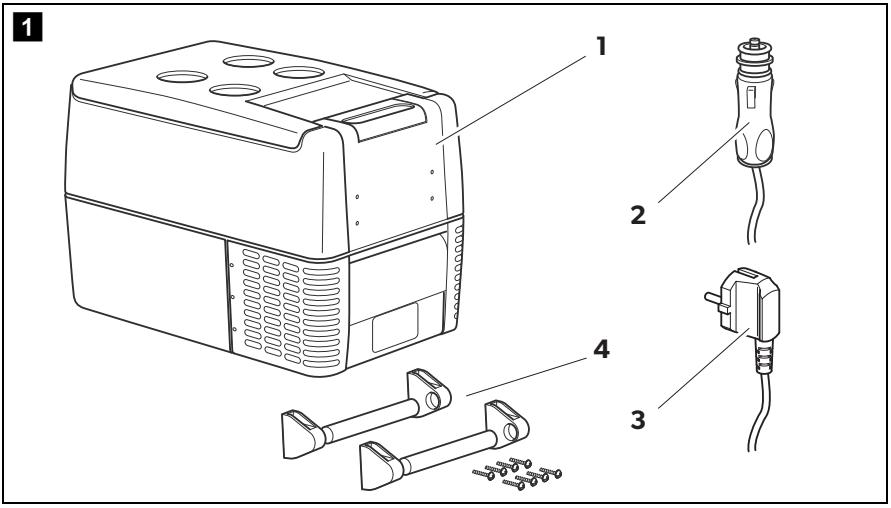


| Item | Quantity | Description |
|---|---|---|
| 1 | 1 | Cooler |
| 2 | 1 | Connection cable for DC connection |
| 3 | 1 | Connection cable for AC connection |
| 4 | 2 | Carrying handle, consisting of:<br>– 2 holders<br>– 1 handle<br>– 4 fastening screws |
| – | 1 | Powdercoated steel basket |
| – | 1 | Operating manual |

# 4 Intended use

The cooling device is suitable for cooling and freezing foods.

The cooling device is designed to be operated from

- a DC on-board power supply of a vehicle, boat or caravan
- a DC auxiliary battery
- an AC power supply

The cooling device is suitable for camping use and in mobile applications such as vehicles, caravans or boats.

The cooling device is intended to be used in household and similar applications such as

- staff kitchen areas in shops, offices and other working environments
- farm houses
- clients in hotels, motels and other residential type environments
- bed and breakfast type environments
- catering and similar non-retail applications

**CAUTION! Health hazard!**
Please check if the cooling capacity of the cooling device is suitable for storing the food or medicine you wish to cool.

# 5 Function description

The cooler can refrigerate or freeze food products. A fast-acting and efficient cooling system provides low maintenance cooling performance with a compressor and control module.

The cooler is designed for mobile use and can be carried by using two removable carrying handles.

The cooler can withstand a short-term inclination of 30°, for example on boats.

## 5.1 Scope of functions

- Power supply with priority circuit for connecting to the power supply
- 3-level battery monitor to protect the vehicle battery
- Automatic compressor speed control for fast cooling and optimal performance
- Display with temperature gauge (switches off automatically at low battery voltage)
- Temperature setting with two buttons in steps of 1 °C (2 °F)
- Removable carrying handles

## 5.2 Operating and display elements

### Operating panel

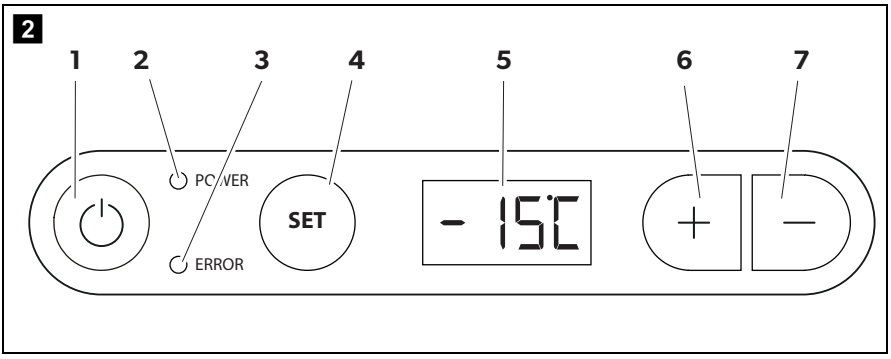


| Item | Description | Explanation | |
|---|---|---|---|
| 1 | ON<br>OFF | Switches the cooler on or off when the button is pressed for between one and two seconds | |
| 2 | POWER | Status indication | |
| | | LED lights up green: | Compressor is on |
| | | LED lights up orange: | Compressor is off |
| | | LED flashes orange: | Display switched off automatically due to low battery voltage |
| 3 | ERROR | LED flashes red: | Device is switched on but not ready for operation |
| 4 | SET | Selects the input mode<br>– Temperature setting<br>– Celsius or Fahrenheit display<br>– Set battery monitor | |
| 5 | – | Display, shows the information | |
| 6 | UP + | Press once to increase the value | |
| 7 | DOWN – | Press once to decrease the value | |

## Connection sockets

3

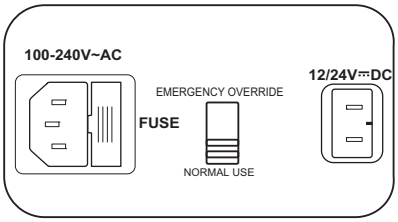


| Item in fig. 3 | Description |
|---|---|
| 1 | AC voltage supply inlet |
| 2 | Fuse holder |
| 3 | DC voltage supply inlet |
| 4 | Emergency switch |

# 6 Operation

## 6.1 Before initial use

**NOTE**
Before starting your new cooler for the first time, you should clean it inside and outside with a damp cloth for hygienic reasons (please also refer to the chapter "Cleaning and maintenance" on page 20).

### Mounting the handles

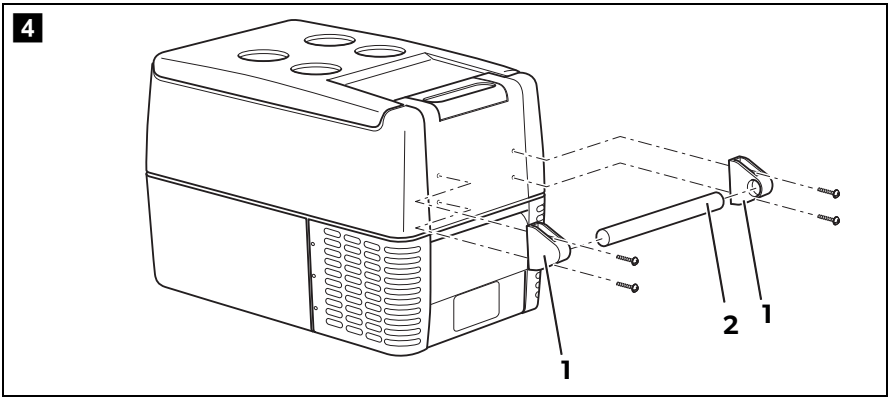


The handles are enclosed unassembled. If you wish to attach the handles, proceed as follows:

➤ Make a handle by putting two holders (**1**) and a handle (**2**) together.

➤ Fasten the grip with the enclosed screws in the holes provided.

### Selecting the temperature units

You can switch the temperature display between Celsius and Fahrenheit. This is how to do it:

➤ Switch on the cooler.

➤ Press the "SET" button (fig. 2 4, page 10) twice.

➤ Use the "UP +" (fig. 2 6, page 10) and "DOWN –" (fig. 2 7, page 10) buttons to select Celsius or Fahrenheit.

✓ The selected temperature units then appear in the display for a few seconds. The display flashes several times before it returns to the current temperature.

## 6.2 Energy saving tips

- Choose a well ventilated location which is protected from direct sunlight.
- If you want to set an increased energy efficiency and a limited cooling capacity for the cooler device, use the device's ECO mode.
- Allow warm food to cool down first before placing it in the cooling device.
- Do not open the cooling device more often than necessary.
- Do not leave the cooling device open for longer than necessary.
- Defrost the cooling device once a layer of ice forms.
- Avoid unnecessarily low temperatures.

## 6.3 Connecting the cooler

### Connecting to a battery (vehicle or boat)

The cooler can be operated with 12 V⎓ or 24 V⎓.

**NOTICE! Danger of damage!**
Disconnect the cooler and other consumer units from the battery before you connect the battery to a quick charging device.
Overvoltage can damage the electronics of the device.

For safety reasons the cooler is equipped with an electronic system to prevent polarity reversal. This protects the cooler against short-circuiting when connecting to a battery.

### Using the fused DC plug

**NOTICE! Danger of damage!**
For protection of the device the DC cable supplied includes a fuse inside the plug. Do **not** remove the fused DC plug.
Only use the DC cable supplied.

➤ Plug the DC connection cable (fig. **1** 2, page 7) into the DC power supply inlet of the cooler (fig. **3** 3, page 11).

➤ Connect the connection cable to a DC power outlet.

**Connecting to an AC power supply (e.g. in the home or office)**

**DANGER! Danger of electrocution!**

- Never handle plugs and switches with wet hands or if you are standing on a wet surface.
- If you are operating your cooler on board a boat from a power supply connection of 100 – 240 V∼ , you must install a residual current circuit breaker between the 100 – 240 V AC power supply and the cooler.
  Seek advice from a trained technician.

The coolers have an integrated multi-voltage power supply with priority circuit for connecting to an AC voltage source. The priority circuit automatically switches the cooler to power supply operation if the device is connected to an AC power supply, even if the DC connection cable is still attached.

When switching between the AC power supply and the battery supply, the red LED may light up briefly.

➤ Plug the AC connection cable (fig. 1 3, page 7) into the AC power supply inlet of the cooler (fig. 3 1,page 11).

➤ Connect the connection cable to the AC power outlet.

## 6.4 Using the battery monitor

The device is equipped with a multi-level battery monitor that protects your vehicle battery against excessive discharging when the device is connected to an on-board DC supply.

If the cooler is operated when the vehicle ignition is switched off, the cooler switches off automatically as soon as the supply voltage falls below a set level. The cooler will switch back on once the battery has been recharged to the restart voltage level.

**NOTICE! Danger of damage!**
When switched off by the battery monitor, the battery will no longer be fully charged. For in-vehicle installations, avoid repeated starting and shutting off of the engine. Allow the vehicle to recharge the battery before powering the cooler on.

In “HIGH” mode, the battery monitor responds faster than at the levels “LOW” and “MED” (see the following table).

| Battery monitor mode | LOW | MED | HIGH |
|---|---|---|---|
| **Switch-off voltage at 12 V** | 10.1 V | 11.4 V | 11.8 V |
| **Restart voltage at 12 V** | 11.1 V | 12.2 V | 12.6 V |
| **Switch-off voltage at 24 V** | 21.5 V | 24.1 V | 24.6 V |
| **Restart voltage at 24 V** | 23.0 V | 25.3 V | 26.2 V |

### Selecting the battery monitor mode

➤ Switch on the cooler.

➤ Press the “SET” button (fig. 2 4, page 10) three times.

➤ Use the “UP +” (fig. 2 6, page 10) and “DOWN –” (fig. 2 7, page 10) buttons to select the battery monitor mode.

✓ Display will be as follows:
Lo (LOW), Пed (MED) or HI (HIGH)

✓ The selected mode then appears in the display for a few seconds. The display flashes several times before it returns to the current temperature.

**NOTE**
When the cooler is supplied by the starter battery, select the battery monitor mode “HIGH”. If the cooler is connected to a supply battery, the battery monitor mode “LOW” will suffice.
If you wish to operate the cooler from the AC power supply, set the battery monitor to the “LOW” position.

## 6.5 Using the cooler

**NOTICE! Danger of overheating!**
Ensure at all times that there is sufficient ventilation so that the heat that generated during operation can dissipate. Ensure that the ventilation slots are not covered. The cooler MUST maintain a MINIMUM of 50 mm away from walls or similar surfaces which could restrict important air flow requirements of the cooling system.

➤ Place the cooler on a firm foundation.
Make sure that the ventilation slots are not covered and that the heated air can dissipate.

**NOTE**
Place the cooler as shown (fig. **1**, page 7). If you operate the box in a different position it can be damaged.

➤ Close the cooler, see chapter "Connecting to a battery (vehicle or boat)" on page 13.

**NOTE**
If you wish to operate the cooler from the AC power supply, set the battery monitor to the "LOW" position.

➤ Press the "ON/OFF" button (fig. **2** 1, page 10) for between one and two seconds.

✓ The "POWER" LED lights up.

✓ The display (fig. **2** 5, page 10) switches on and shows the current temperature.

**NOTE**
The temperature displayed is that of the middle of the interior.
The temperatures elsewhere can deviate from this temperature.

✓ The cooler starts cooling the interior.

**NOTE**
**During low voltage:**
If switched off by the battery monitor due to low voltage, the display goes blank, and the LED "POWER" flashes orange.

## 6.6 Setting the temperature

**NOTICE! Danger from excessively low temperature!**
Ensure that the only those objects are placed in the cooler that are intended to be cooled at the selected temperature.

➤ Press the "SET" button (fig. 2 4, page 10) once.

➤ Use the "UP +" (fig. 2 6, page 10) and "DOWN –" (fig. 2 7, page 10) buttons to select the cooling temperature.

✓ The cooling temperature appears in the display for a few seconds. The display flashes several times and then the current temperature is displayed again.

## 6.7 Using the Emergency Switch

The emergency override switch (fig. 3 4, page 11) is located in the connection panel.

➤ For normal operation the switch should be in the NORMAL USE position.

➤ In the unlikely event of an electronic control failure slide the switch to EMERGENCY OVERRIDE.

**NOTE**
In this position the appliance will run all the time and will therefore perform as a freezer only.

## 6.8 Switching off the cooler

➤ Empty the cooler.

➤ Switch the cooler off.

➤ Pull out the connection cable.

If you do not want to use the cooler for a longer period of time:

➤ Leave the lid slightly open. This prevents odor build-up.

## 6.9 Defrosting the cooler

Humidity can form frost in the interior of the cooling device or on the evaporator. This reduces the cooling capacity. Defrost the device in good time to avoid this.

**NOTICE! Danger of damage!**
Never use hard or pointed tools to remove ice or to loosen objects which have frozen in place.

To defrost the cooler, proceed as follows:

- ➤ Remove the contents.
- ➤ If necessary, place them in another cooling device to keep them cool.
- ➤ Switch off the device.
- ➤ Leave the lid open.
- ➤ Wipe off the defrosted water.

## 6.10 Replacing the AC fuse

**DANGER! Danger of electrocution!**
Disconnect the connection cable before you replace the device fuse.

- ➤ Pull off the connection cable.
- ➤ Pry out the fuse insert (fig. 3 2, page 11) with a screwdriver.
- ➤ Replace the defective fuse with a new one that has the same rating (T4AL 250 V).
- ➤ Press the fuse insert back into the housing.

## 6.11 Replacing the DC plug fuse

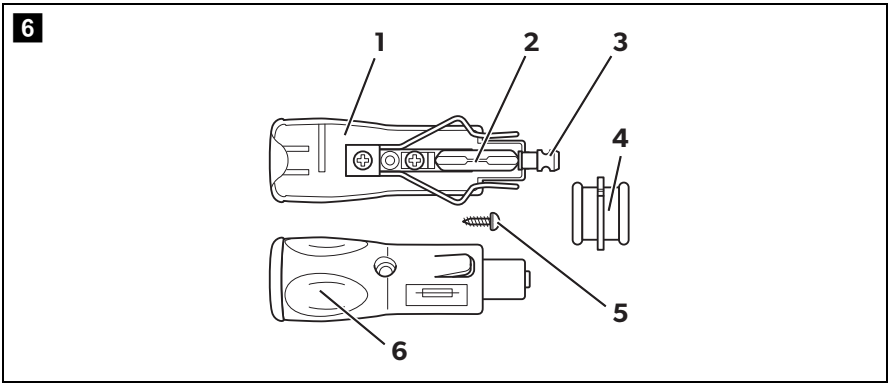


- ➤ Pull the adapter sleeve (**4**) off of the plug.
- ➤ Unscrew the screw (**5**) out of the upper half of the housing (**1**).
- ➤ Carefully raise the upper half of the housing from the lower (**6**) half.
- ➤ Take out the contact pin (**3**).
- ➤ Replace the defective fuse (**2**) with a new fuse of the same type and rating (8 A 32 V).
- ➤ Re-assemble the plug in the reverse order.

**NOTE – Internal DC fuse**
There is an additional DC fuse inside the device (Automotive standard blade fuse, 10 A). This fuse can only be replaced by an authorised repair centre.

## 6.12 Replacing the light bulb

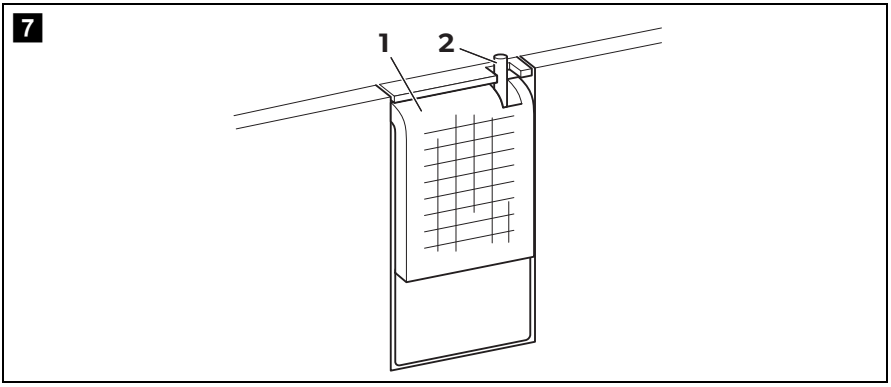


➤ Press the switch pin (**2**) downwards so that the transparent part (**1**) of the lamp can be removed at the front.

➤ Replace the light bulb.

**NOTE**
The LEDs in the light bulb must be facing the transparent part of the lamp.

➤ Press the transparent part of the lamp back into the housing.

# 7 Cleaning and maintenance

**NOTICE! Damage hazard**
- Never clean the cooler under running water or in dish water.
- Do not use abrasive cleaning agents or hard objects during cleaning as these can damage the cooler.

➤ Occasionally clean the device interior and exterior with a damp cloth.

➤ Make sure that the air inlet and outlet vents on the device are free of any dust and dirt, so that heat can be released and the device is not damaged.

# 8 Warranty

Comprehensive warranty details for this product are included in the separate Warranty Certificate. For service or warranty assistance, please contact the manufacturer via details on the back of this operating manual.

For warranty and repair processing, please have the following information available:

- A copy of the proof of purchase
- A reason for the claim or description of the fault

# 9 Troubleshooting

| Fault | Possible cause | Suggested remedy |
|---|---|---|
| Device does not function, LED does not glow. | No voltage was detected in the DC power outlet. | In most vehicles the ignition must be turned on before power will be supplied to the DC power outlet. |
| | No voltage present in the AC voltage outlet. | Try using another plug outlet. |
| | The device fuse is defective. | Replace the device fuse, see chapter "Replacing the AC fuse" on page 18. |
| | The integrated power supply adapter is defective. | This can only be repaired by an authorized repair center. |
| The device does not cool (plug is inserted, "POWER" LED is lit). | Defective compressor. | This can only be repaired by an authorized repair center. |
| The device does not cool (plug is inserted, "POWER" LED flashes orange, display is switched off). | Battery monitor is set too high. | Select a lower battery monitor setting. |
| | Battery voltage is too low. | Test the battery and charge it as needed. |

| Fault | Possible cause | Suggested remedy |
|---|---|---|
| When operating from the DC outlet:<br>The ignition is on and the device is not. working and the LED is not lit. | The DC outlet is dirty. This results in a poor electrical contact. | If the plug of your cooler becomes very warm in the DC outlet, either the DC outlet must be cleaned or the plug has not been assembled correctly. |
| | The fuse of the DC plug has blown. | Replace the fuse in the DC plug, see chapter "Replacing the DC plug fuse" on page 19. |
| | The DC fuse inside the device has blown. | This can only be repaired by an authorised repair centre. |
| | The vehicle fuse has blown. | Replace the vehicle's DC outlet fuse. Please refer to your vehicle's operating manual. |
| The display shows an error message (e.g. "Err1") and the appliance does not cool. | The appliance has switched off due to an internal fault. | This can only be repaired by an authorized repair center. |
| The interior light of a compartment flashes. | The lid of the compartment has been left open for more than three minutes. | Close the lid of the compartment. |

# 10 Disposal

➤ Place the packaging material in the appropriate recycling waste bins wherever possible.

If you wish to finally dispose of the product, ask your local recycling centre or specialist dealer for details about how to do this in accordance with the applicable disposal regulations.

# 11 Technical data

| | **CF40SG** |
|---|---|
| Connection voltage: | 12/24 V⎓ and 100 – 240 V∼ |
| Rated current<br>– 12 V⎓:<br>– 24 V⎓:<br>– 100 – 240 V∼ : | <br>6.0 A<br>3.0 A<br>1.3 A to 0.7 A |
| Cooling capacity: | +10 °C to –18 °C (+50 °F to –0.4 °F) |
| Gross volume: | 39 l |
| Storage volume: | 37 l |
| Climate class: | N or T |
| Ambient temperature: | 18 °C to 43 °C (+64.4 °F to 109.4 °F) |
| Noise emission: | 45 dB(A) |
| Refrigerant quantity: | 45 g |
| $CO_2$ equivalent: | 0.064 t |
| Global warming potential (GWP): | 1430 |
| Dimensions<br>(W x H x D) in mm (including handles):<br>(W x H x D) in mm (with handles removed): | <br>360 x 445 x 710<br>360 x 445 x 580 |
| Weight: | 17.2 kg |
| Test/certificates: | |

**NOTE**
If the ambient temperature is above 32 °C (90 °F), the minimum temperature cannot be attained.

The refrigerant circuit contains R134a.

Contains fluorinated greenhouse gases

Hermetically sealed equipment

DOMETIC

DOMETIC Australia
PO Box 2495
Burleigh BC QLD 4220

Ph: 1800 21 21 21 (Mon-Fri 8:00am to 5:00pm AEST)
Email: qldservice@dometic.com.au

4445103122 05/2020

AUS 1800 21 21 21
qldservice@dometic.com.au