DOMETIC | seaXchange Sea Water Reverse Osmosis

USERS MANUAL / INSTALLATION GUIDE

XTC

XTC600 XTC1200 XTC1800 XTC2200

www.spotzerowater.com

TABLE OF CONTENTS

1. INTRODUCTION 4

Congratulations 5

Safety 5

Acronyms and Definitions 6

Principles of Reverse Osmosis 7

Unit Specifications 8

Operation Specifications 9

SW Feed & Operation Specifications 11

Rejection, Recovery & Flow Rates 13

2. INSTALLATION AND COMISSIONING 13

Installation Kit 14

Electrical Requirements 15

Plumbing & Piping Connections 16

Sea Water Plumbing Connections Installation 20

Product to Tank Connection 22

Fresh Water Flush Connections 23

Electrical Connections 24

Initial Startup 26

Standard Operation 29

Commissioning Report Form 30

3. OPERATION AND MAINTENANCE 31

Operating Does and Don'ts 32

HP Pump Maintenance 33

Sea Water Membrane Care 34

Sea Water Membrane Removal & Replacements 36

Manually Flushing the System 38

Preparing the Unit for storage or Shipment 41

High Pressure Pump Oil Change 42

4. TROUBLESHOOTING 44

Abnormal Permeate Flow 45

Temperature Correction Factor 46

5. XTC TOUCH SCREEN AND NAVIGATION 49
Home Screen 50
Standard Operation 51
Auto Shut Down by Time 55
Auto Shut Down by Volume 56
Manual Run Procedure 58
Manual Fresh Water Flush 64
Menu Options 65
Summary 65
System Information 66
Alarms 66
Alarm History 67
Service Menu 68
System Options 69
Units of Measurement 69
Diversion Valve Set Point 70
Regulator Valve 71
Manual PLC 72
Manual Hand 73
Fresh Water Flush 74
Maintenance 75
Remote Support 76
Remote Touch Screen Setup 82
6. XTC SYSTEM SCHEMATICS 86
7. XTC SYSTEM SPECIFICATION AND PARTS 91
8. XTC PLUMBING SCHEMATIC 102
9. APPENDIX 107
Cat Pump 108
Price Booster Pump 121
Fimtec Membrane 137
Burkert Diversion Valve 140
10. WARRANTY 146

PART 1: INTRODUCTION

CONGRATULATIONS

Your Sea Xchange XTC-Series Reverse Osmosis System is a durable piece of equipment that, with proper care, will last for many years. This User's Manual outlines installation, operation, maintenance, and troubleshooting details vital to the sustained performance of your system.

If your system is altered at the site of operation or if the feed water conditions change, please contact your local dealer or distributor to determine the proper recovery for your application.

NOTE: PRIOR TO OPERATING OR SERVICING THE REVERSE OSMOSIS SYSTEM, THIS USER'S MANUAL MUST BE READ AND FULLY UNDERSTOOD. KEEP THIS AND OTHER ASSOCIATED INFORMATION FOR FUTURE REFERENCE AND FOR NEW OPERATORS OR QUALIFIED PERSONNEL NEAR THE SYSTEM.

SAFETY

The safety section of this User's Manual outlines the various safety headings used throughout this manual's text and are enhanced and defined below:

NOTE: INDICATES STATEMENTS THAT PROVIDE FURTHER INFORMATION AND CLARIFICATION.

CAUTION: INDICATES STATEMENTS THAT ARE USED TO IDENTIFY CONDITIONS OR PRACTICES THAT COULD RESULT IN EQUIPMENT OR OTHER PROPERTY DAMAGE.

WARNING: INDICATES STATEMENTS THAT ARE USED TO IDENTIFY CONDITIONS OR PRACTICES THAT COULD RESULT IN INJURY OR LOSS OF LIFE. FAILURE TO FOLLOW WARNINGS COULD RESULT IN SERIOUS INJURY OR EVEN DEATH.

DO NOT UNDER ANY CIRCUMSTANCE; REMOVE ANY CAUTION, WARNING, OR OTHER DESCRIPTIVE LABELS FROM THE SYSTEM.

ACRONYMS AND DEFINITIONS

ACRONYM/SYMBOLS	DEFINITION
FWF	FRESH WATER FLUSH
RO	REVERSE OSMOSIS
PSI	POUNDS PER SQUARE INCH
GPM	GALLONS PER MINUTE
GPD	GALLONS PER DAY
TDS	TOTAL DISSOLVED SOLIDS
PPM	PARTS PER MILLION
TCF	TEMPERATURE CORRECTION FACTOR
LP SWITCH	LOW PRESSURE SWITCH
HP SWITCH	HIGH PRESSURE SWITCH
Φ	PHASE
SW	SEA WATER
FW	FRESH WATER

PRINCIPLES OF REVERSE OSMOSIS

REVERSE OSMOSIS

How Fresh Water Is Produced

Reverse Osmosis or “RO” is a process where freshwater water is produced by pumping saltwater through a semi-permeable membrane.

Osmosis

Osmosis is a naturally occurring process where a weak solution will cross a semi-permeable membrane to mix with a highly concentrated solution. For example a freshwater solution will naturally want to mix with a saltwater solution.

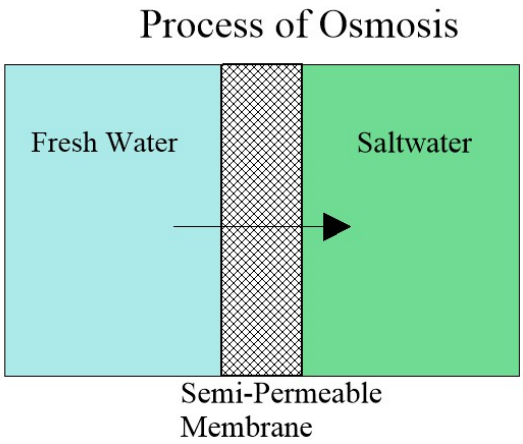

Reverse Osmosis

To reverse this process work is put into the system using a pump. The pump causes pressure to build up on the saltwater side of the membrane. This pressure forces water across the semi-permeable membrane. The membrane is designed to allow the water molecules to pass while preventing the salt and other solids from doing so. Fresh water is collected on the other side of the membrane as a result.

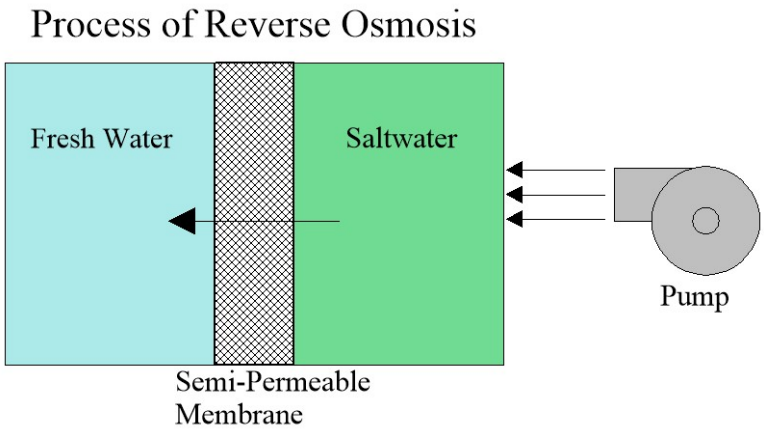

UNIT SPECIFICATIONS

XTC MODEL	600	1200	1800	2200
Configuration	1 Vessel	2 Vessel	3 Vessel	4 Vessel
Feed Water Source	Sea Water	Sea Water	Sea Water	Sea Water
Rated production gpd (gpm)	600(0.41)	1200(0.83)	1800(1.25)	2200(1.52)
Rejection and Flow Rates				
Nominal Salt Rejection %	99.4%	99.4%	99.4%	99.4%
Minimum Feed Flow gpm (lpm)	4.2 (15.9)	4.2 (15.9)	4.2 (15.9)	4.2 (15.9)
Minimum Concentrate Flow gpm (lpm)	3.79 (14.3)	3.3 (12.5)	2.95 (11.2)	2.68 (10.1)
Connections				
Feed inch	¾” Hose	¾” Hose	¾” Hose	¾” Hose
Product inch	3/8” QC 9.5mm	3/8” QC 9.5mm	3/8” QC 9.5mm	3/8” QC 9.5mm
Concentrate inch	1/2” QC 2.7mm	1/2” QC 12.7mm	1/2” QC 12.7mm	1/2” QC 12.7mm
Membranes				
Membrane Per Vessel	1	1	1	1
Membrane Quantity	1	2	3	4
Membrane Size	2540	2540	2540	2540
Pumps				
High Pressure Pump Type	Piston	Piston	Piston	Piston
HP motor amps	10.6	10.6	10.6	10.6
High Pressure Motor HP (kw)	2.5	2.5	2.5	2.5
Booster motor amps	4.3	4.3	4.3	4.3
Booster Pump RPM @ 60 (50Hz)	1750 (1450)	1750 (1450)	1750 (1450)	1750 (1450)
Electrical				
Voltage	230V 50/60Hz 1Φ	230V 50/60Hz 1Φ	230V 50/60Hz 1Φ	230V 50/60Hz 1Φ
Amp Draw	14.9	14.9	14.9	14.9
System Dimensions				
L x W x H inch (cm)	48.125”x18.312”x 17.625” (122.25x46 .5x44.75)	48.125”x18.312”x 17.625” (122.25x46.5 x44.75)	48.125”x18.312”x 17.625” (122.25x46 .5x44.75)	48.125”x18.312”x 17.625” (122.25x46 .5x44.75)
Weight lb. (kg)	120 (54.4)	158 (71.6)	169 (76.6)	180 (81.6)

OPERATION SPECIFICATIONS

BEFORE STARTING

The reverse osmosis process causes the concentration of impurities. The impurities may precipitate (fall out of solution) when their concentration reaches saturation levels when operated beyond rated production. This precipitation can scale or foul the membranes. In order to prevent this, your XTC unit should never be operated over the **rated production** listed in the **UNIT SPECIFICATION** chart (page 8) and also should not be run above **850psi pump pressure**. Water temperature and inlet water ppm are variables that affect product flow rate and pump pressure

***CAUTION: THE RATED PRODUCTION WILL HAVE TO BE CORRECTED FOR TEMPERATURE OF SEA WATER WHEN DETERMINING RATED FLOW FOR YOUR UNIT. SEE* 'TEMPERATURE CORRECTION FACTORS FOR WATER PRODUCTION' CHART (PAGE 12-13) FOR AN EXAMPLE ON CORRECTING THE RATED FLOW RATE.**

PRE-FILTRATION

XTC-Series systems are supplied with a 25-micron (part number 252404292) and 5-micron (part number 252404291) HIGH CAPACITY sediment filters. These filters are made from Typar™ filter media and contain 30% more media than most 2.5" x 10" pleated sediment cartridges To prevent damage to the system, we recommend using the sediment filters supplied with this system. Change the pre-filters once the pressure gauge labeled **FILTER OUT** is 15psi or lower.

BOOSTER PUMP

XTC-series systems are supplied with a stainless steel centrifugal pump. The pump must be located below the water line to maintain a positive suction head for priming purposes. Refer to page 121 for the Booster Pump Manual.

THE BOOSTER PUMP MUST NEVER BE RUN DRY. OPERATING THE PUMP WITHOUT SUFFICIENT FEED WATER WILL DAMAGE THE PUMP.

HIGH PRESSURE PUMP

The pump used on the XTC-Series systems is a piston type constructed of stainless steel. Follow these guidelines to ensure proper operation of the pump:

- Refer to the CAT High Pressure Pump in manufacturer's index for recommended maintenance (page 107).
- The pump must **NEVER** be run dry. Operating the pump without sufficient feed water will damage the pump.
- **ALWAYS** use the required filters when operating the unit. The high pressure pump is susceptible to damage from sediment and debris.
- If any damage occurs to your system's pump, a re-build kit is available. Contact your local dealer or distributor and inform them of your system's model and pump size.

Follow the instructions in the FWF section on page 38.

MEMBRANES

XTC-Series reverse osmosis systems come pre-loaded with DOW FILMTEC™ sea water membranes unless otherwise specified. For the best longevity of membranes, use the manufacturer's recommended pre-filters, operate it within it limits, and ensure the system is performing its regular FWF. Membrane element guidelines can be found in the Dow FILMTEC™ Membranes Manual on page 137.

DIVERSION VALVE

The diversion valve controls the product water after the membranes. If the controller determines that the salinity of the water is acceptable, (based on the salinity set point) it will energize the diversion valve solenoid, causing the water to flow to the vessels tank. If the electrical portion of the solenoid fails or the controller fails to energize the solenoid, a manual bypass on the diversion valve may be utilized if the product water is found to be acceptable. Refer to picture on page 55 and the Diversion Valve Manual on page 140.

SYSTEM CONTROLLER

The controller is a logic based pc board that can analyze and control the electrical components within the system. Its primary functions are to monitor safety switches (high and low pressure), perform the program sequence of operations to optimize the start, normal operation, and shutdown sequence.

FEED WATER & OPERATION SPECIFICATIONS

Nothing has a greater effect on a reverse osmosis system than the feed water quality

NOTE: IT IS VERY IMPORTANT TO MEET THE MINIMUM FEED WATER REQUIREMENTS. FAILURE TO DO SO WILL CAUSE THE MEMBRANES TO FOUL AND VOID THE MANUFACTURER'S WARRANTY.

Maximum Feed Temperature °F (°C)	95 (29)	Maximum Free Chlorine ppm	0
Minimum Feed Temperature °F (°C)	40 (4.4)	Maximum TDS ppm	45,000
Maximum Ambient Temperature °F (°C)	110 (48.9)	Maximum Hardness gpg	0
Minimum Ambient Temperature °F (°C)	40 (4.4)	Maximum pH (Continuous)	11
Maximum Feed Pressure psi (bar)	40 (5.9)	Minimum pH (Continuous)	5
Minimum Feed Pressure psi (bar)	15(3.1)	Maximum pH (Cleaning 30 Min.)	12
Maximum Operating Pressure psi (bar)	850(68.95)	Minimum pH (Cleaning 30 Min.)	2
Minimum SDI Rating SDI	<1	Maximum Turbidity NTU	1

Test Parameters: 35,000 TDS Filtered (5 Micron), De-Chlorinated, Feed Water, 40 psi (4.5 bar) Feed Pressure, 850 psi (58.61 bar) Operating Pressure, 77

Degrees F (25 Degrees C), Recovery as stated, 7.0 pH. Data taken after 60 minutes of operation.

NOTE: HIGHER TDS AND/OR LOWER FEED WATER TEMPERATURES WILL REDUCE THE SYSTEM'S PRODUCTION.

REJECTION, RECOVERY, & FLOW RATES

Sea Xchange XTC-Series Reverse Osmosis Systems are designed to produce product water at the capacities indicated For example, the XTC 2200 produces 1.53 gallons per minute (2200/24/60min=1.53gpm) of permeate water at the listed operating test conditions.

The amount of total dissolved solids (TDS) rejected by the membrane is expressed as a percentage. For example, a 99.4% rejection rate means that 99.4% of total dissolved solids do not pass through the membrane. To calculate the % rejection, use the following formula:

% Rejection = [(Feed TDS – Product TDS) / Feed TDS] x 100

Example:

99.4% = [(35,000-210)/35,000] x 100

NOTE: ALL TDS FIGURES MUST BE EXPRESSED IN THE SAME UNITS, TYPICALLY PARTS PER MILLION (PPM) OR MILLIGRAMS PER LITER (MG/L).

SX XTC-Series Reverse Osmosis Systems are designed to reject up to 99.4% NaCl, unless computer projections have been provided or stated otherwise.

The amounts of product water recovered for use is expressed as a percentage. To calculate % recovery and % rejection, use the following formulas:

% Recovery = (Product Water Flow Rate / Feed Water Flow

Rate) x 100 Example:

36% = (1.52/4.22) x 100

% Rejection = (Feed TDS – Product TDS)/(Feed TDS)

x 100 Example:

99.4% = [(35,000-210)/35,000] x 100

NOTE: ALL FLOW RATES MUST BE EXPRESSED IN THE SAME UNITS.

2. INSTALLATION AND COMISSIONING

INSTALLATION KIT

ITEMS INCLUDED WITH EACH SYSTEM

MAIN INSTALLATION ITEMS

252404258 – stainless steel booster pump and motor assembly

252404295 - 2.5” x 10” carbon block filter

252404172 - 2.5”x 10” double pre-filter assembly

252404326 – 2.5” filter housing wrench

252404202 – 20’ of ¾“ white double walled hose. **(Not to be used on the suction side of feed pump. Always use wire reinforced hose from the seacock to the suction side of the feed pump.)**

252404004 – 50’ of ¼ ” Spot Zero white nylon tubing **(for FWF)**

252404003 – 50’ of ½” Spot Zero white nylon tubing **(for overboard)**

252404002 - 50’ of 3/8” Spot Zero white nylon tubing **(for product)**

252404099 – (2) 3/8” x ½” connectors

252404114 – (2) 3/8” tee

252404109 – (3) 3/8”QC x 3/8”QC 90° elbow

252404118 – (18) 3/8” red locking clip

254404094 – (3) ½” elbow tube

252404093 –(1) ½” connector male

252404115 – (2) ½” tee

252404115 – (10) ½” red locking clip

(10) – Blue clamp aid safety covers

(8) – Stainless steel 5/16” x 1” lag bolts

(8) – Stainless steel 5/16” flat washers

CONSUMABLE ITEMS

252404192 – 2.5” x 10” 25 micron pre-filter

252404191 – 2.5” x 10”5 micron pre-filter

252404015 – 21oz. bottle CAT pump oil

252404179 – SW30 2540 membrane

OPTIONAL ITEMS

252404298 – high capacity prefilter (4.5” X 20”)

252404317 – high capacity prefilter assembly

252404225 – remote control and 50’ cable

252404121 – spare fitting kit

252404040 – hand held TDS meter

Membrane and vessel array upgrade

NOTE: Items listed are 1 unit supplied unless noted within parentheses.

ELECTRICAL REQUIREMENTS

ELECTRICAL

The XTC Series are available in 1Φ (phase).

230 volts at 14.9 amps (including booster pump)

50/60 Hertz available in the 230 volt unit

NOTE: IT'S RECOMMENDED THAT A QUALIFIED ELECTRICIAN WIRE YOUR SYSTEM IN ACCORDANCE WITH ALL APPLICABLE CODES, RULES, AND REGULATIONS.

WARNING: TO REDUCE THE RISK OF ELECTRICAL SHOCK, THE INCOMING POWER SUPPLY MUST INCLUDE A PROTECTIVE GROUND.

PLUMBING AND PIPING CONNECTIONS

PLUMBING

The membranes and high pressure pumps used on XTC-Series Reverse Osmosis Systems require a continuous flow of water with a maximum temperature not to exceed 113°F. ***Please see Complete Install Guide and the connection drawings on the following pages.***

CAUTION: ANY RESTRICTIONS OR BLOCKAGE IN THE CONCENTRATE LINE CAN CAUSE BACKPRESSURE, WHICH WILL INCREASE THE SYSTEM'S OPERATING PRESSURE. THIS CAN RESULT IN DAMAGE TO THE SYSTEM'S MEMBRANES AND COMPONENTS.

TUBE CUTTING AND INSTALLATION PROCEDURE

Cut the tube square

Cut the tube square and remove burrs and sharp edges. Ensure the outside diameter is free of score marks. For soft or thin walled tube we recommend the use of a tube insert.

Push up to tube stop

Push the tube into the fitting, to the tube stop.

Pull to check secure

To disconnect

Push in collet and remove tube

To disconnect, ensure the system is depressurized, push the collet square against the fitting. With the collet held in this position the tube can be removed.

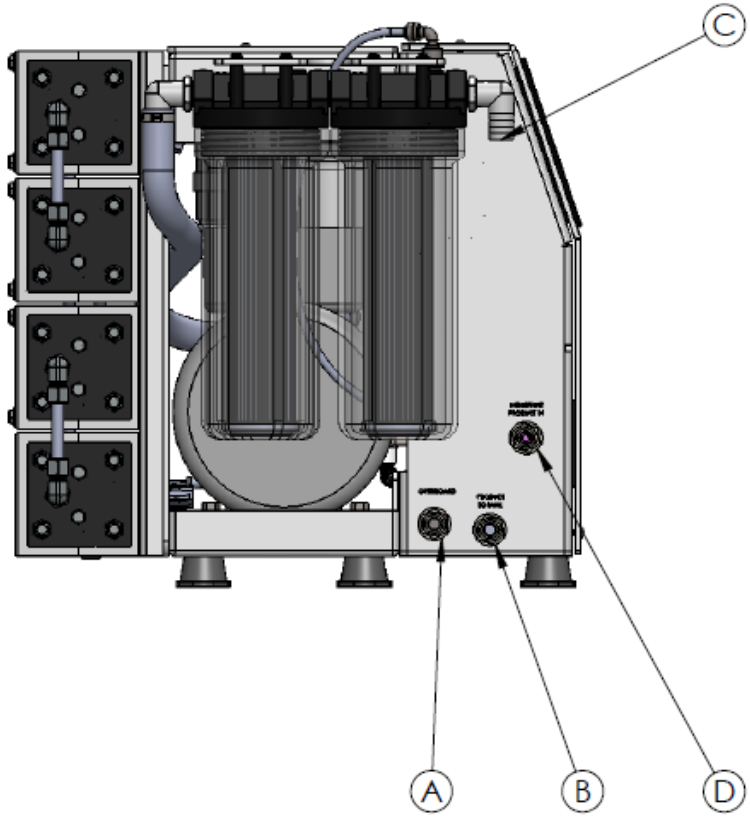

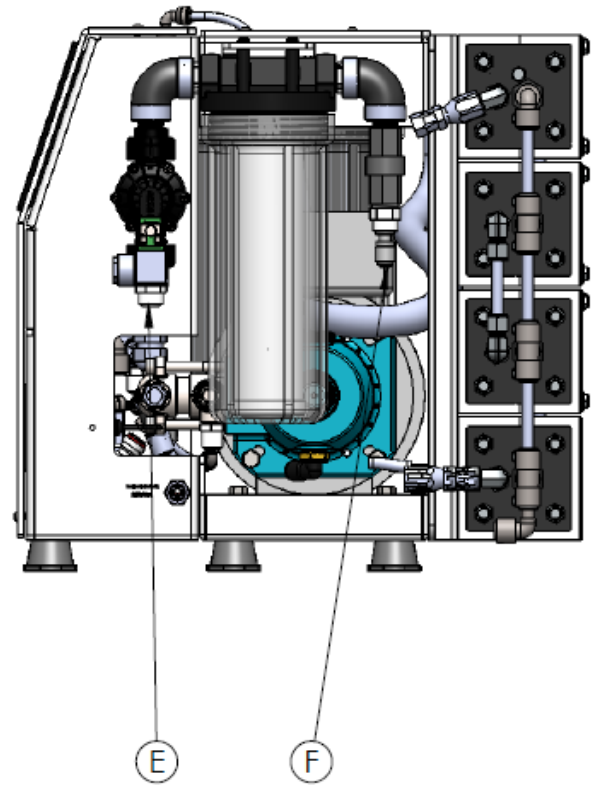

INLETS & OUTLETS		
LOCATION	**DESCRIPTION**	**SIZE**
A	OVERBOARD OUTLET	1/2" TUBE
B	PRODUCT WATER OUTLET	3/8" TUBE
C	SEA WATER INLET	3/4" HOSE
D	MEMBRANE PRODUCT IN	3/8" TUBE
E	FROM SHIPS PUMP	1/2" FNPT
F	TO BOOSTER PUMP	1/4" TUBE

PROPRIETARY AND CONFIDENTIAL
THE INFORMATION CONTAINED IN THIS DRAWING IS THE SOLE PROPERTY OF SPOT ZERO. ANY REPRODUCTION IN PART OR AS A WHOLE WITHOUT THE WRITTEN PERMISSION OF SPOT ZERO IS PROHIBITED.

UNLESS OTHERWISE SPECIFIED:
DIMENSIONS ARE IN INCHES
TOLERANCES: ±.015
FRACTIONAL ±1/32
ANGULAR: MACH ±1/2 BEND ±1
TWO PLACE DECIMAL ±.010
THREE PLACE DECIMAL ±.005

	NAME	DATE
DRAWN	JIL	04-10-17
CHECKED		
ENG APPR.		
MFG APPR.		
Q.A.		

DOMETIC | seaXchange

XTC
INLET & OUTLET LOCATIONS

SCALE: N/A | DWG. #: SX0052 | SHEET 1 OF 2

NOTES:

1. CONNECTIONS CAN BE MADE FROM THE TOP OR THE BOTTOM OF THE UNIT.
2. CLAMSHELL WATER INLET RECOMMENDED BEFORE SEA COCK.
3. REINFORCED HOSE NEEDED FROM SEA COCK TO BOOSTER PUMP.

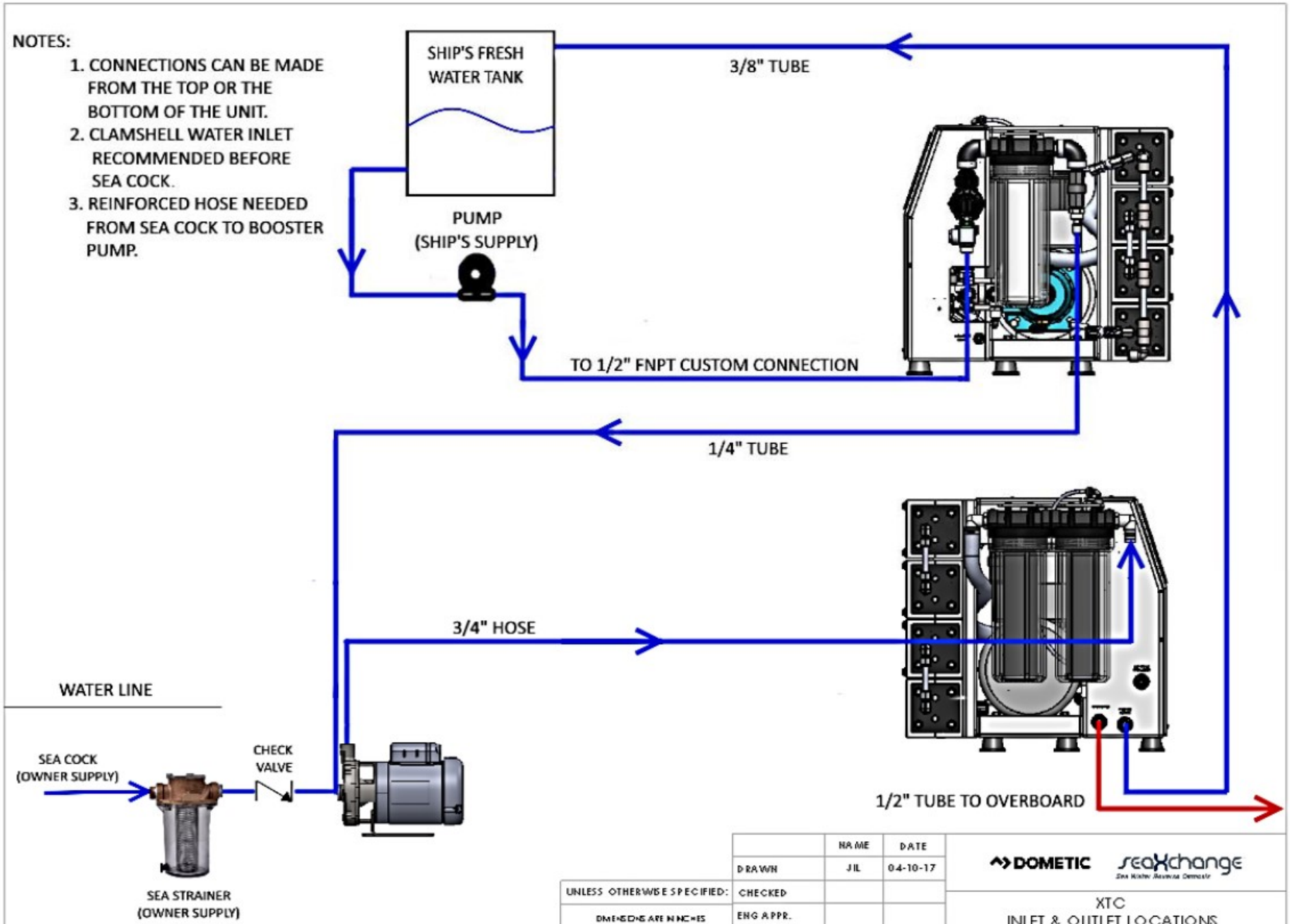

	NAME	DATE
DRAWN	JIL	04-10-17
CHECKED		
ENG APPR.		
MFG APPR.		
Q.A.		

UNLESS OTHERWISE SPECIFIED:

DIMENSIONS ARE IN INCHES
TOLERANCES: ±.015
FRACTIONAL ±1/32
ANGULAR: MACH ±1/2 BEND ±1°
TWO PLACE DECIMAL ±.010
THREE PLACE DECIMAL ±.005

DOMETIC seaXchange

XTC
INLET & OUTLET LOCATIONS

SCALE: N/A | DWG. #: SX0052 | SHEET 2 OF 2

PROPRIETARY AND CONFIDENTIAL
THE INFORMATION CONTAINED IN THIS DRAWING IS THE SOLE PROPERTY OF SPOT ZERO. ANY REPRODUCTION IN PART OR AS A WHOLE WITHOUT THE WRITTEN PERMISSION OF SPOT ZERO IS PROHIBITED.

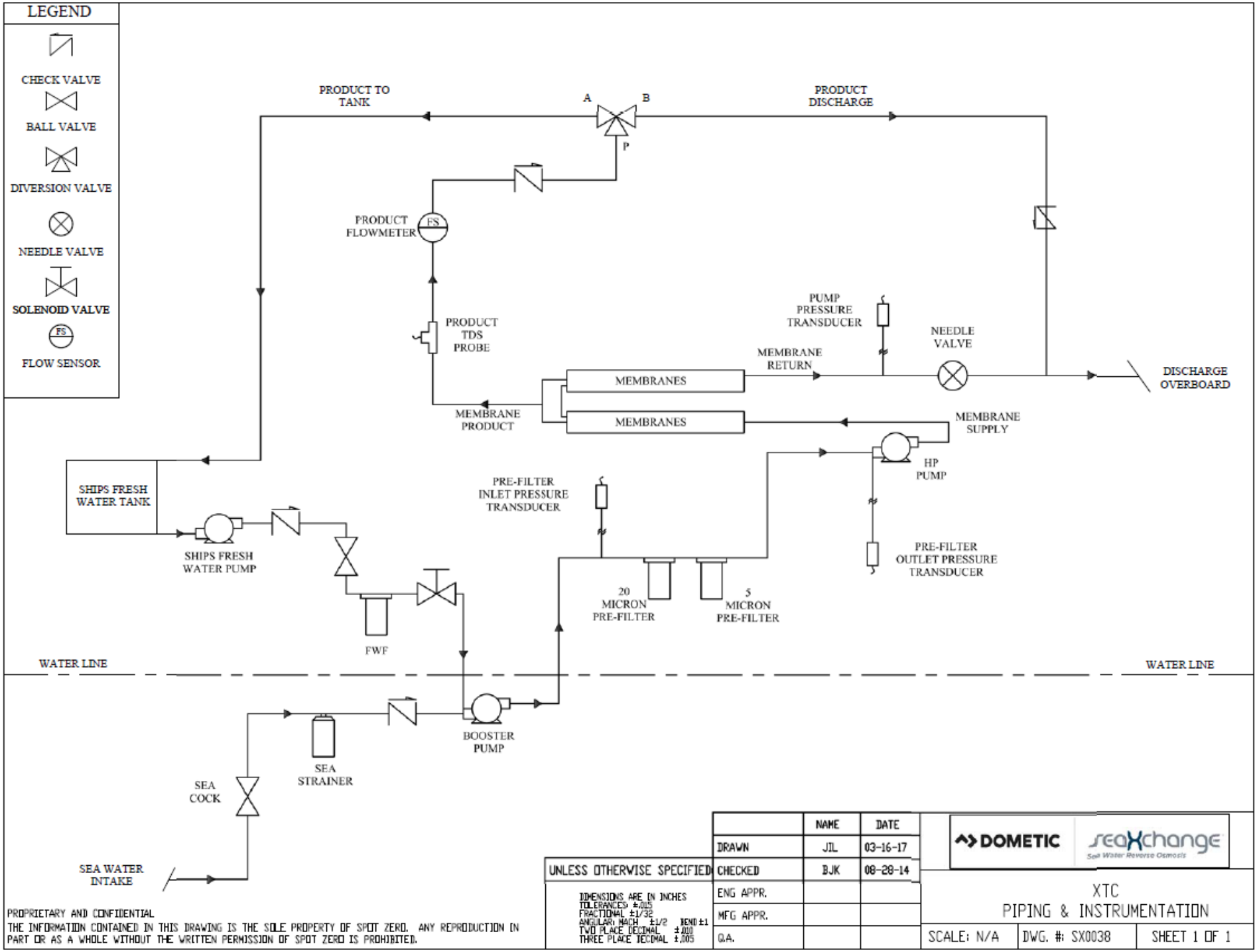
LEGEND
CHECK VALVE
BALL VALVE
DIVERSION VALVE
NEEDLE VALVE
SOLENOID VALVE
FS
FLOW SENSOR
PRODUCT TO TANK
A
B
P
PRODUCT DISCHARGE
PRODUCT FLOWMETER
FS
PRODUCT TDS PROBE
PUMP PRESSURE TRANSDUCER
NEEDLE VALVE
MEMBRANE RETURN
MEMBRANES
MEMBRANES
MEMBRANE PRODUCT
MEMBRANE SUPPLY
DISCHARGE OVERBOARD
HP PUMP
SHIPS FRESH WATER TANK
SHIPS FRESH WATER PUMP
PRE-FILTER INLET PRESSURE TRANSDUCER
PRE-FILTER OUTLET PRESSURE TRANSDUCER
20 MICRON PRE-FILTER
5 MICRON PRE-FILTER
FWF
WATER LINE
WATER LINE
BOOSTER PUMP
SEA STRAINER
SEA COCK
SEA WATER INTAKE
PROPRIETARY AND CONFIDENTIAL
THE INFORMATION CONTAINED IN THIS DRAWING IS THE SOLE PROPERTY OF SPOT ZERO. ANY REPRODUCTION IN PART OR AS A WHOLE WITHOUT THE WRITTEN PERMISSION OF SPOT ZERO IS PROHIBITED.
UNLESS OTHERWISE SPECIFIED
DIMENSIONS ARE IN INCHES
TOLERANCES ±.015
FRACTIONAL ±1/32
ANGULAR MACH ±1/2 BEND ±1
TWO PLACE DECIMAL ±.010
THREE PLACE DECIMAL ±.005
NAME
DATE
DRAWN
JIL
03-16-17
CHECKED
BJK
08-28-14
ENG APPR.
MFG APPR.
Q.A.
DOMETIC
seaXchange
Sea Water Reverse Osmosis
XTC
PIPING & INSTRUMENTATION
SCALE: N/A
DWG. #: SX0038
SHEET 1 OF 1

Sea Water Plumbing Connections

1. Locate a dedicated sea cock to be used for booster pump supply. Sea cock should be a minimum of 3/4” with a speed scoop to prevent a Venturi effect while vessel is underway.

2. Install a sea strainer with at least a 50 mesh rating after sea cock.

3. Install supplied booster pump below water line.

Note - Booster pump outlet must remain the highest point of pump and cannot be rotated 90

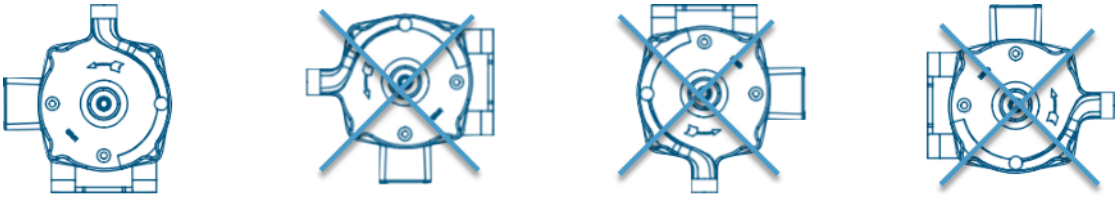

4. Run reinforced suction hose from sea cock to sea strainer to booster pump in an upward flow manner to prevent air traps.

5.

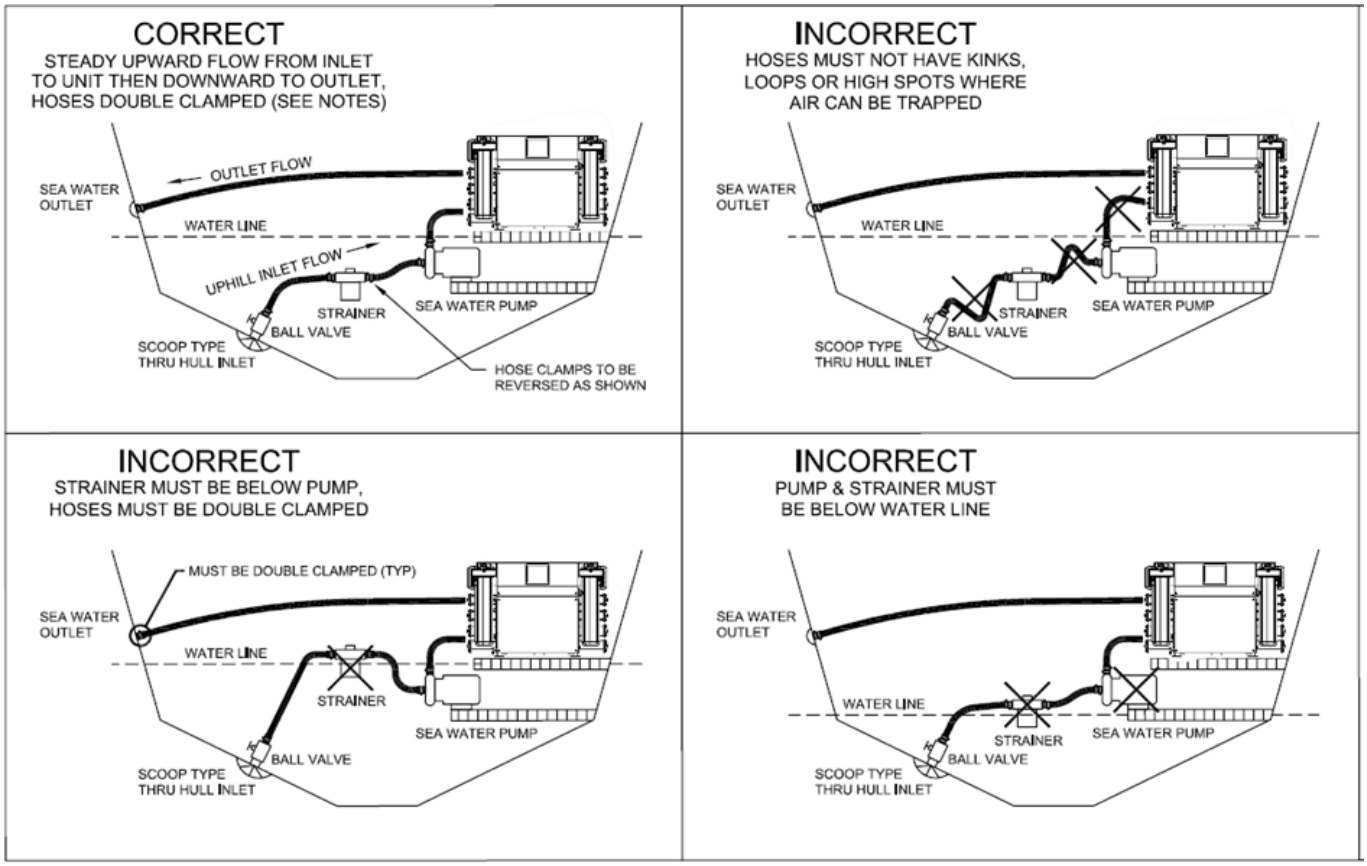

NOTES:
1) THRU HULL INLET, BALL VALVE, HOSE AND STRAINER SHOULD BE SIZED NO SMALLER THAN PUMP INLET.
2) INSTALL THRU HULL FITTING AS FAR BELOW THE WATER LINE AS POSSIBLE.
3) PUMP NEEDS DEDICATED THRU HULL NOT SHARED WITH OTHER PUMPS.
4) AVOID OR MINIMIZE 90° ELBOW FITTINGS AS MUCH AS POSSIBLE, ROTATE PUMP HEAD TOWARDS DIRECTION OF WATER FLOW.

6. Use supplied white 3/4” flexible hose from discharge of booster pump to **Pre-Filter Inlet** connection on **Sea Xchange Sediment** filter assembly located on left side of system. Filter assembly may be remote mounted if desired. Be sure that there

PRE-FILTRATION

XTC-Series systems are supplied with a 20-micron and 5-micron sediment filters. Change when a 10-15 psi differential exists between the pre-filter. Ask your local dealer or distributor about Pre-Filtration systems, if required. SEE DWG# SX0041.

NOTE: THE SYSTEM MUST BE OPERATED IN ACCORDANCE TO FEED WATER SPECIFICATIONS.

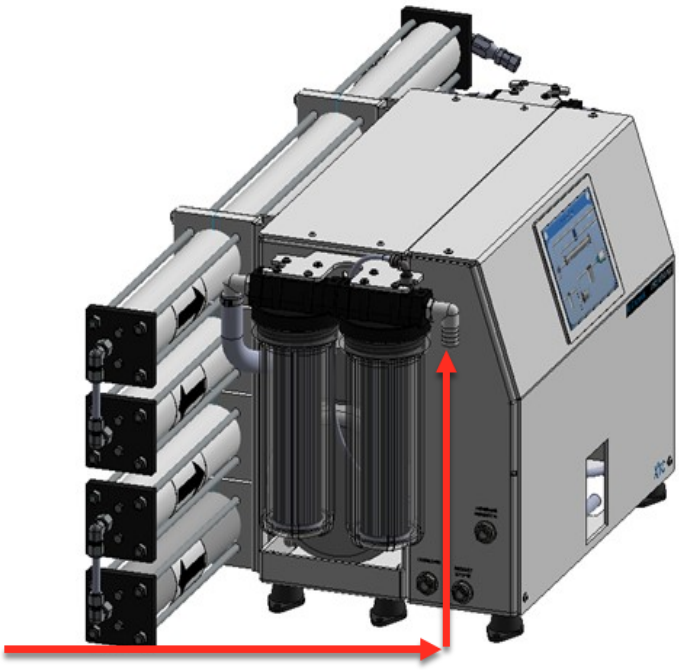

7. Double clamp all sea water hose connections to prevent potential leaks.

8. Locate connection labeled “**Overboard**” on lower left side of system. Run supplied white 1/2” tube to a dedicated overboard connection.

Warning - Sea water overboard must never be closed or obstructed while system is operational. Closing or obstructing the overboard flow on system may cause permanent damage to system.

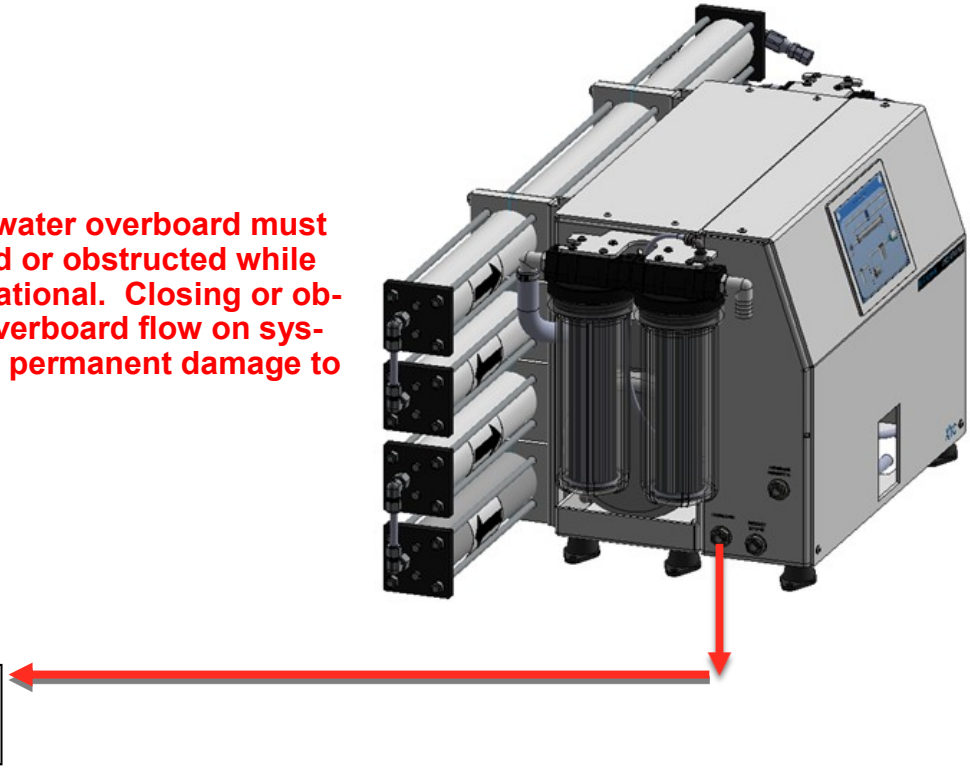

Product to Tank Connection

9. Locate the fitting labeled **Product to Tank** on left side of system. Connect supplied white 3/8" tubing from system to the inlet of the ships fresh water tank. Be sure that there are no kinks in hose run and avoid 90's where possible to prevent restricted flow.

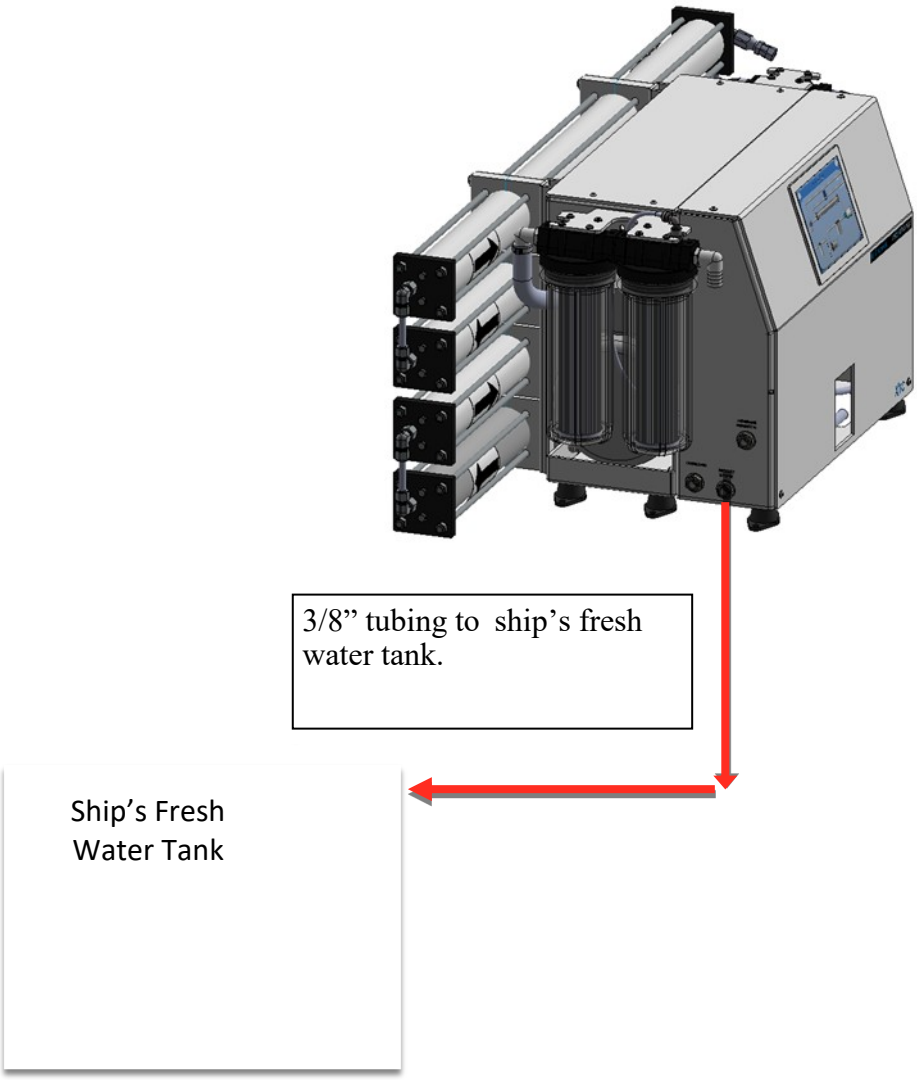

Warning - Ships fresh water tank must be vented properly to avoid back pressure on system. Failure to do so may cause permanent damage to system and/or to not function properly.

Warning - Product to tank must never be closed or obstructed while system is operational. Closing or obstructing the product flow on system may cause permanent damage to system and/or to not function properly.

Fresh Water Flush Connection

1. Locate filter assembly labeled **Fresh Water Flush** and connect the inlet of fresh water flush solenoid to the ships pressurized fresh water system.
   Note - a shut off valve is recommended to be installed on supply line to fresh flush assembly for service.

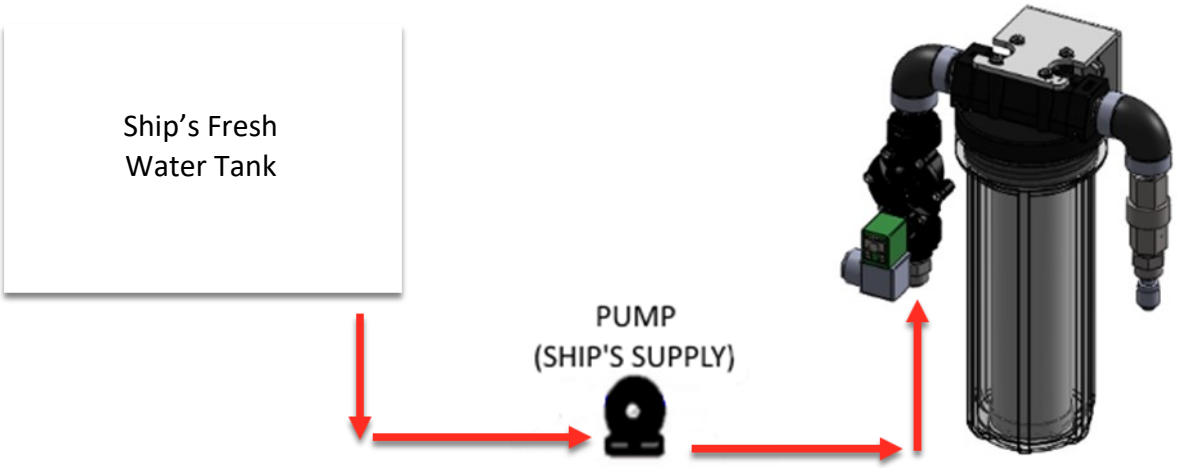

2. Run supplied white 1/4" tubing from outlet filter assembly labeled **Fresh Water Flush**

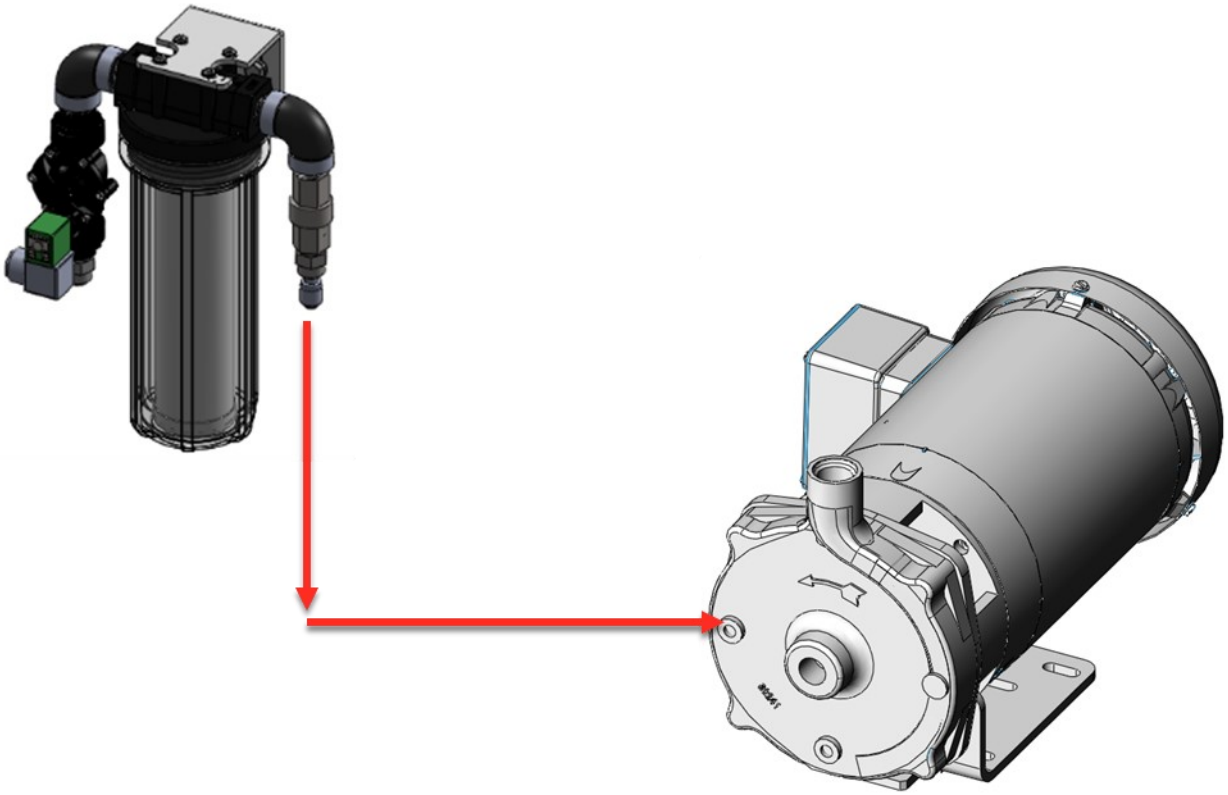

Electrical Connections

1. Connect main power supply to main power terminal blocks, connect power to booster pump from contactor as shown below. Ground main power supply and booster pump to grounding bus bar. Reference DWG SX0034.

- The XTC-Series systems pump and motor are available in 230 Volt, 50/60 Hertz, 1 Phase

- Ensure that the electrical circuit supplying the system is compatible with the requirements of the specific XTC model you are installing.

NOTE: IT'S RECOMMENDED THAT A QUALIFIED ELECTRICIAN WIRE YOUR SYSTEM IN ACCORDANCE WITH ABYC REQUIREMENTS.

WARNING: TO REDUCE THE RISK OF ELECTRICAL SHOCK, THE INCOMING POWER SUPPLY MUST INCLUDE A PROTECTIVE GROUND.

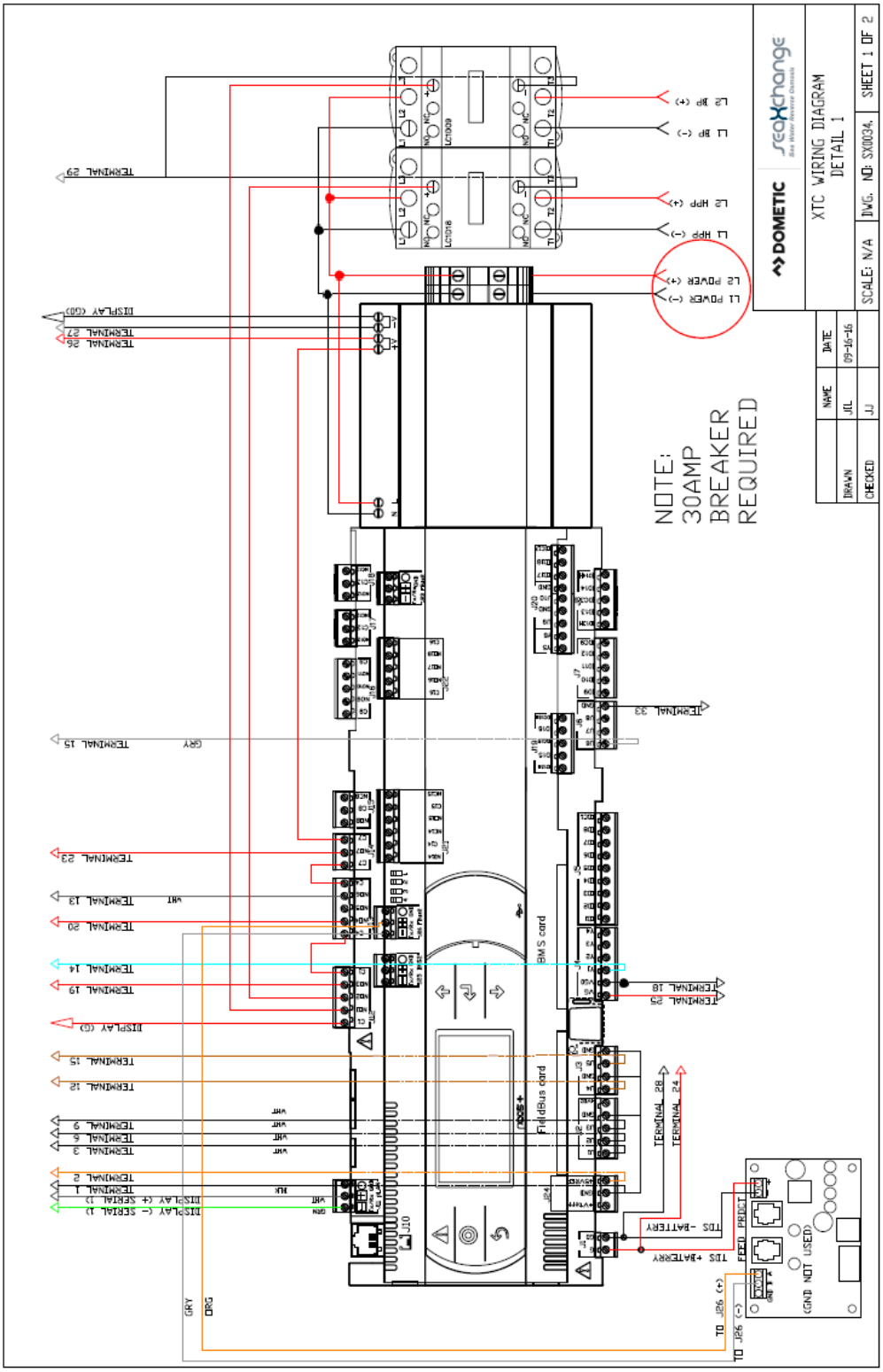

2. Connect fresh water flush power leads as shown below

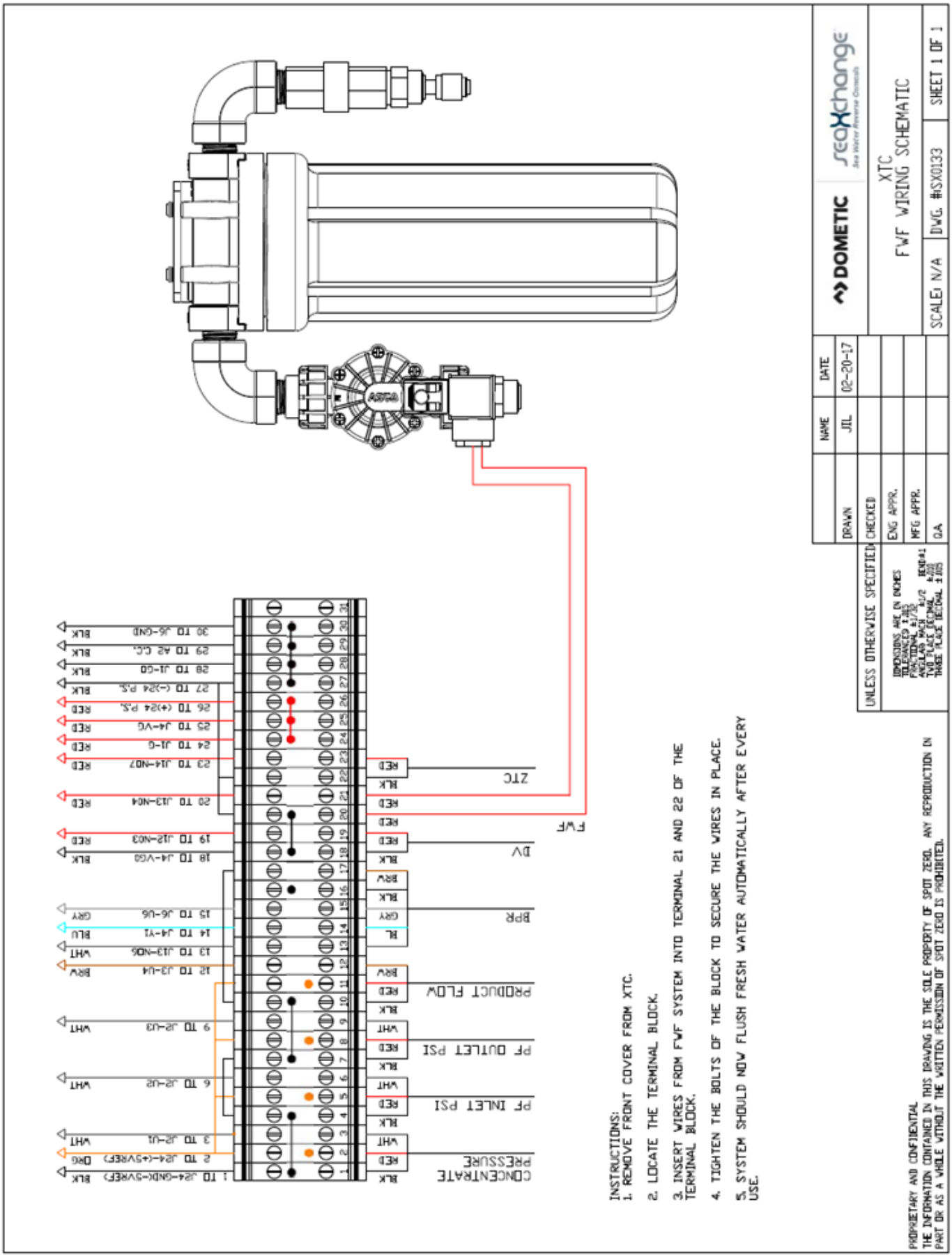

INITIAL START- UP

Carefully inspect your system before initial start-up. Check that all plumbing and electrical connec-tionsare not loose or have not come undone during shipment. A User's Manual, Test Results, and Filter Housing Wrench will accompany your XTC-Series Reverse Osmosis System.

1. Maintain the permeate water line (Product to Tank) to drain for this procedure.
2. Perform a MANUAL FRESH WATER FLUSH as indicated below in order to purge all air out of the system.
3. Press the Fresh Water Flush image or select Fresh Water Flush from the service menu.

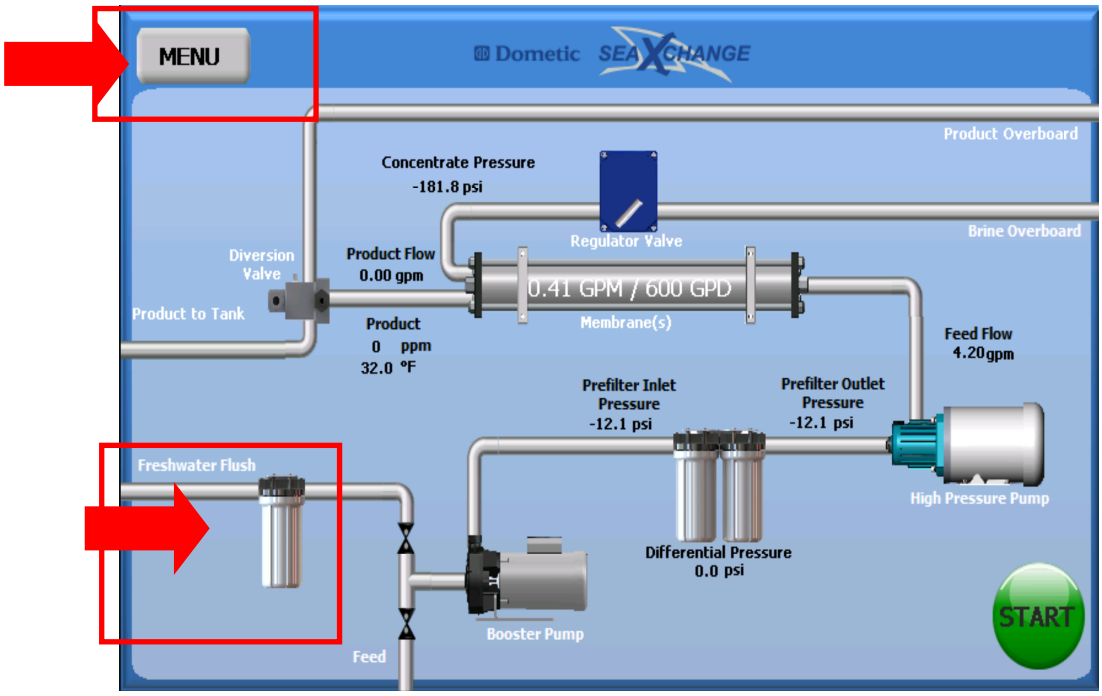

4. Press the down arrow on Mode and select the OFF option in order to activate MANUAL FWF

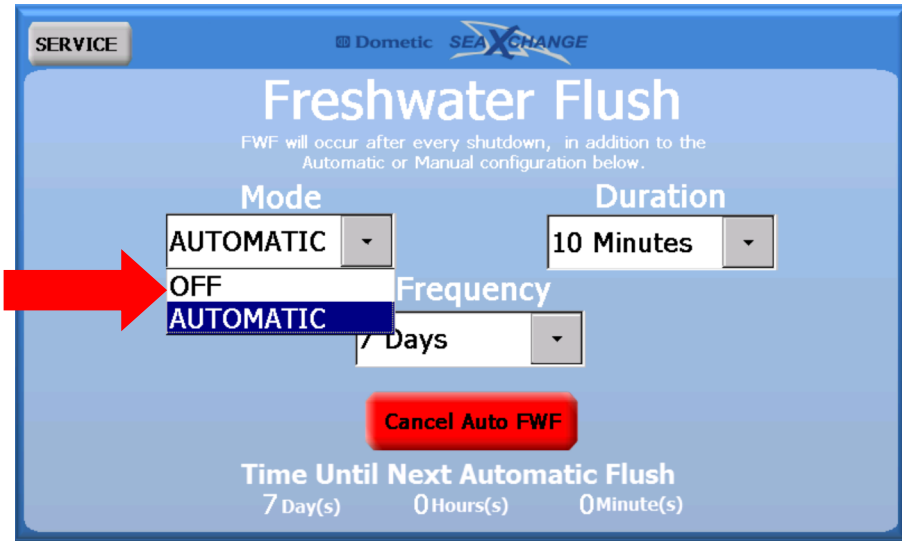

5. MANUAL FWF icon should appear. Press the button to initiate a FWF and let it run.

6. Press the Booster Pump image.

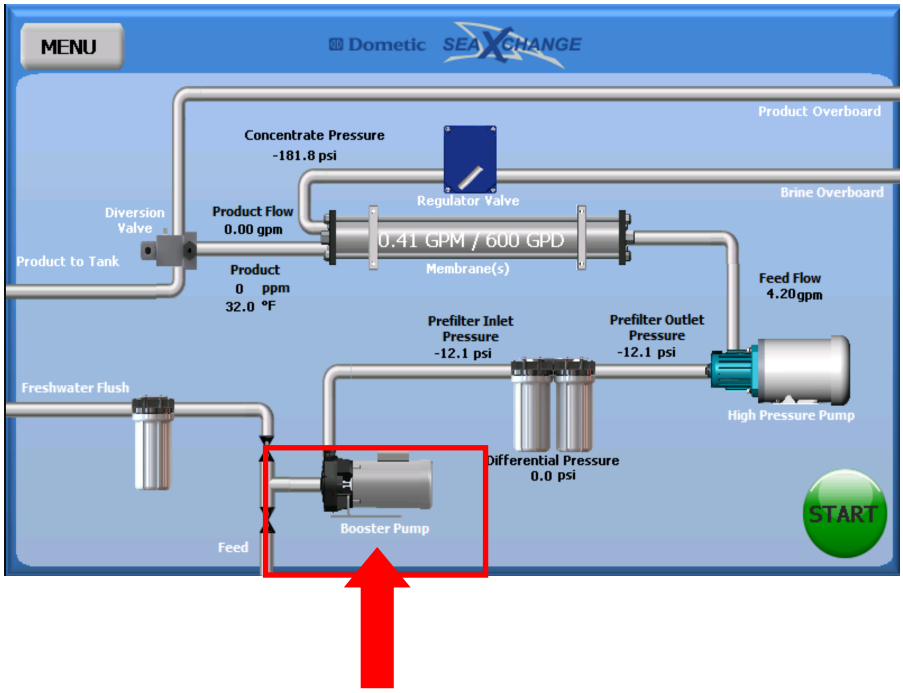

7. Press the "ON" button, then press the "X" button to exit the menu. When the Booster Pump is running wavy line should appear to the right of the Booster Pump image indicating that the motor is on.

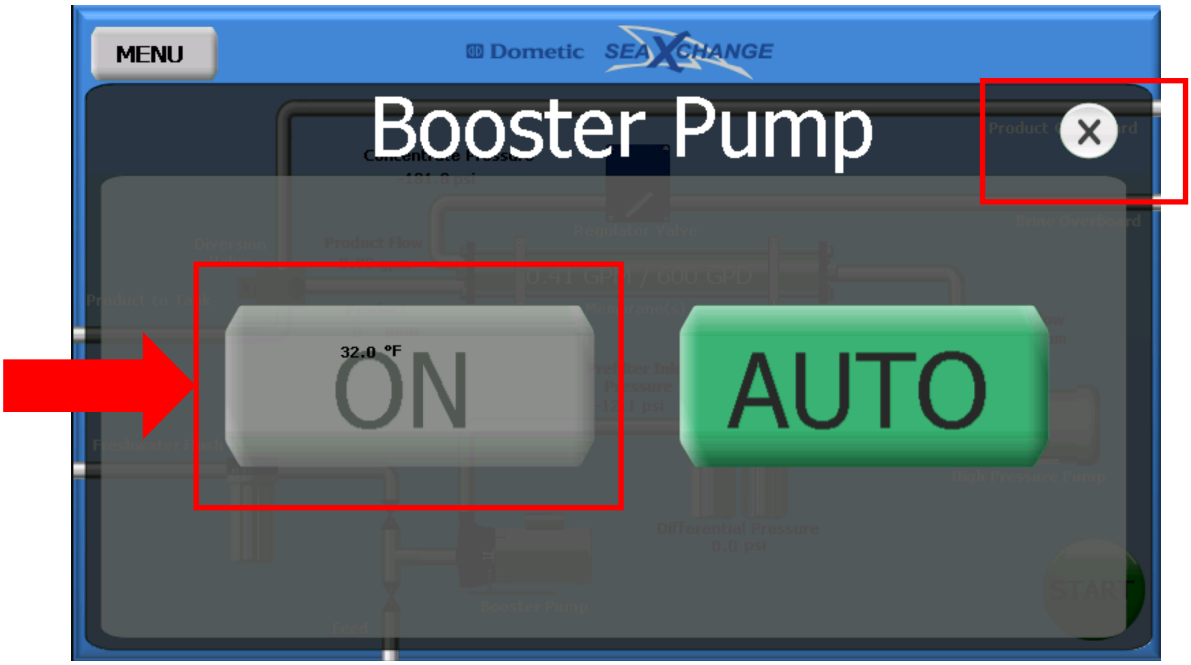

8. Let the Booster pump run for 30 minutes to flush out all membrane preservative.

9. Check system for any leaks.

10. Return Booster Pump to AUTO mode and return FWF to AUTO mode

11. Re-direct the product water back to the tank or point-of-use.

12. Proceed to STANDAR OPERATION on the next section.

STANDARD OPERATION

1. Simply press the Start button and the system will automatically adjust to produce water.

2. You can set the system to automatically shut down as instructed on pages 35-38 or simply press the STOP button to stop the system.

OPTION 1

OPTION 2

SEA XCHANGE COMMISSIONING REPORT FORM

System Information:

Model number - _____ Serial number - _____

Date of Commission - _____ Commissioned by- _____

Installed by - _____ Vessel hull number- _____

First step to commissioning a new system is to look over the install to be sure everything is installed correct. This check-list must be gone through prior to powering up the system.

___ Have all plumbing connections have been made, and secured?

___ Have all plumbing lines been run to the correct locations?

___ Is the boost pump installed below the water line?

___ Has wire reinforce hose been used on the suction side of the boost pump?

___ Is raw water intake open?

___ Is the overboard open and free of obstructions?

___ Is the system _____voltage, _____hertz, and _____phase correct?

___ Is the circuit breaker sized properly with sufficient wire gauge?

___ Is the power cable connected to the power inlet terminals of the system?

Now power up the system,

___ Are all displays on and functional?

At this time follow the start-up procedure in the manual and operate the system for an hour at its rated capacity, then record the following data.

System operating readings

Pre-filter inlet _____ psi Pre-filter outlet _____ psi

Concentrate pressure _____ psi Concentrate flow _____ gpm

Product flow _____ gpm Product TDS _____ ppm

Feed water TDS _____ ppm Feed water temperature _____ F or C

Hours on system _____ hrs Amp draw _____ Voltage _____

Location system was tested_____

Problems or other notes:

3. OPERATION AND MAINTENANCE

OPERATING DO's & DON'Ts

DO:

1. Change the cartridge filters regularly
2. Monitor the system and keep a daily log
3. Adjust the system product to the recommended value
4. Always feed the pump with filtered water

DON'T:

1. Permit chlorine to be present in the feed water
2. Shut down the system for extended periods without preservation
3. Close the control valves completely
4. Operate the system with insufficient feed flow
5. Operate the pump dry
6. Do not tee together the product reject with the brine discharge unless directly at the overboard

OPERATION & M A I N TEN A N CE

The reverse osmosis process causes the concentration of impurities. The impurities may precipitate (fall out of solution) when their concentration reaches saturation levels.

NOTE: PRECIPITATION CAN SCALE OR FOUL MEMBRANES AND MUST BE PREVENTED.

DO NOT OPERATE SYSTEM BEYOND RATED PRODUCTION!

PUMP MAINTENANCE

The pump used on the XTC-Series systems is a piston style stainless steel type.

Follow these guidelines to ensure proper operation of the pump:

1. IMPORTANT! Change oil after initial 50 hours of operation and every 500 Hours thereafter.
2. The pump must **NEVER** be run dry. Operating the pump without sufficient feed water will damage the pump.

ALWAYS feed the pump with filtered water. The pump is susceptible to damage from sediment and debris.

If any damage occurs to your system's pump, a re-build kit is available. Contact your local dealer or distributor and inform them of your system's model and pump size.

Please refer to the appendix section for CAT PUMPS service manual.

MEMBRANE CARE

• Maximum Operating Temperature	113°F (45°C)
• Maximum Operating Pressure	850 psi (58 bar)
• Maximum Pressure Drop	15 psig (1.0 bar)
• pH Range, Continuous Operation [a]	7-9
• pH Range, Short-Term Cleaning [b]	1 - 13
• Maximum Feed Silt Density Index	SDI 5
• Free Chlorine Tolerance [c]	<0.0 ppm

Operating Limits

a. Maximum temperature for continuous operation above pH 10 is 95°F (35°C).

b. Under certain conditions, the presence of free chlorine and other oxidizing agents will cause premature membrane failure.

c. Since oxidation damage is not covered under warranty, FilmTec recommends removing residual free chlorine by pretreatment prior to membrane exposure. Please refer to technical bulletin 609-22010 for more information.

Proper start-up of reverse osmosis water treatment systems is essential to prepare the membranes for operating service and to prevent membrane damage due to overfeeding or hydraulic shock. Following the proper start-up sequence also helps ensure that system operating parameters conform to design specifications so that system water quality and productivity goals can be achieved.

Membrane Operation Guidelines

Avoid any abrupt pressure or cross-flow variations on the spiral elements during start-up, shut-down, cleaning or other sequences to prevent possible membrane damage. During start-up, a gradual change from a standstill to operating state is recommended as follows:

- Feed pressure should be increased gradually over a 30-60 second time frame.
- Cross-flow velocity at set operating point should be achieved gradually over 15-20 seconds.
- Permeate obtained from first hour of operation should be discarded.

Membrane General Information

- Keep elements moist at all times after initial wetting.
- If operating limits and guidelines given in this bulletin are not strictly followed, the limited warranty will be null and void.
- To prevent biological growth during prolonged system shutdowns, it is recommended that membrane elements be immersed in a preservative solution.
- The customer is fully responsible for the effects of incompatible chemicals and lubricants on elements.
- Maximum pressure drop across an entire pressure vessel (housing) is 50 psi (3.4 bar).
- Avoid static permeate-side backpressure at all times.

MEMBRANE REMOVAL & REPLACEMENT

Replacing membranes in the pressure vessels is an easy process if you have the proper information and tools at hand. Please refer to the following instructions when removing and replacing membrane elements:

WARNING: ALL PRESSURE GAUGES MUST READ ZERO BEFORE PROCEEDING. BEFORE ATTEMPTING, DISCONNECT THE POWER FROM THE SYSTEM AND BLEED ALL WATER PRESSURE FROM THE SYSTEM.

1. Remove the end plugs from the side of the pressure vessels. This is done by removing the four 3/8” nuts and washers. The end plugs should then freely slide out of the pressure vessel.

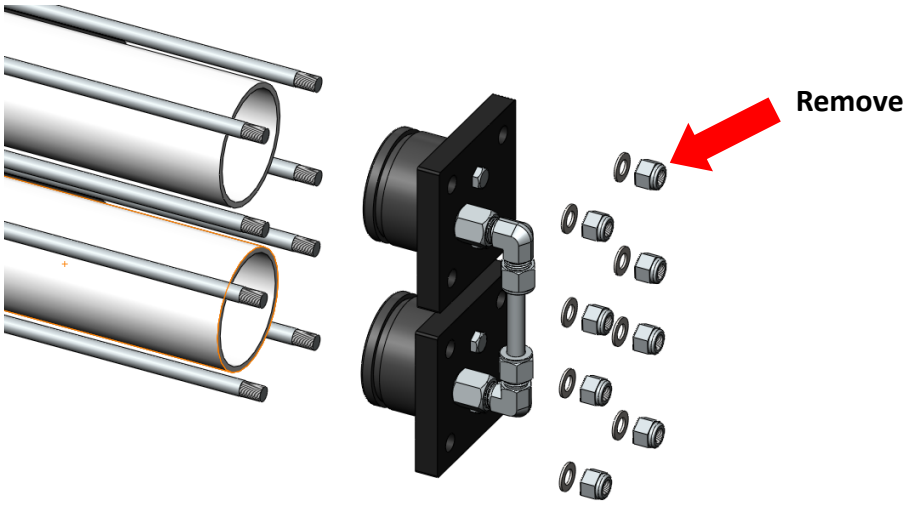

2. Remove the replacement membrane element(s) from the shipping box; the membrane(s) should be contained within a plastic oxygen barrier bag.

NOTE: WEAR GLOVES FOR THE FOLLOWING STEPS IN ORDER NOT TO CONTAMINATE THE MEMBRANE.

3. Cut the bag open as close as possible to the seal at one end of the bag, so the bag may be re-used if necessary.
4. Make sure that all parts are clean and free from dirt. Examine the brine seal, and permeate tube for nicks or cuts. Replace the O-rings or brine seal if damaged.

5. Flow directions should be observed for installation of each element into their respective pressure vessels.

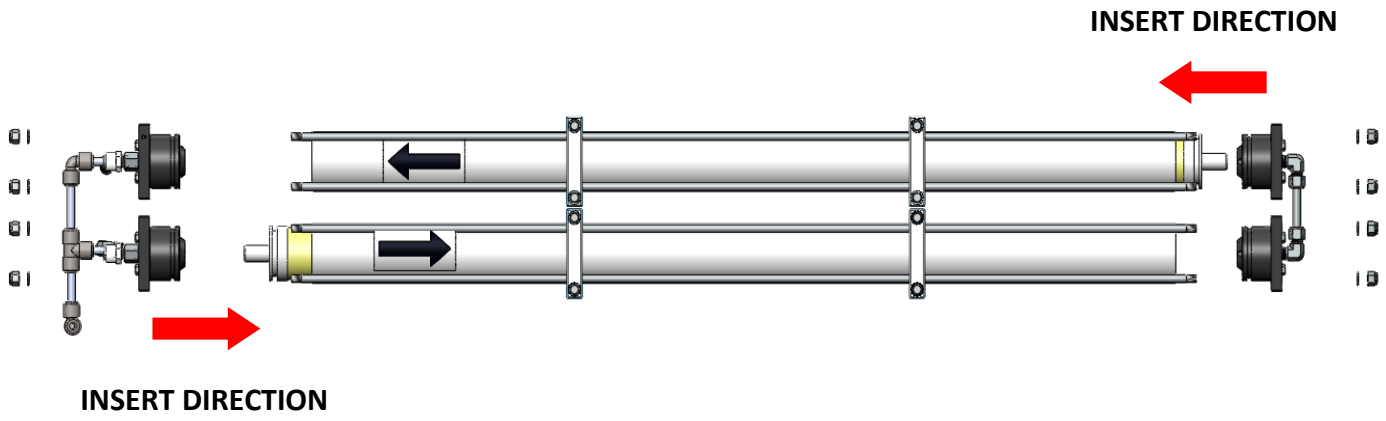

6. Remove one membrane element at a time from the pressure vessels, from the side of each housing. Long nose pliers may be necessary to pull the old membrane element out of the membrane element housing.
6. Lubricate the brine seal with a non-petroleum based lubricant, such as Dow Corning® 111.
7. Install membranes with brine seal location depicted.

WARNING: THE BRINE SEAL MUST BE IN THE SAME POSITION FOR EACH MEMBRANE ELEMENT HOUSING. THE BRINE SEAL IS A RUBBER SEAL THAT PROTRUDES ON ONE SIDE OF THE MEMBRANE AND IS ALWAYS ON THE FEED SIDE OF THE MEMBRANE ELEMENT.

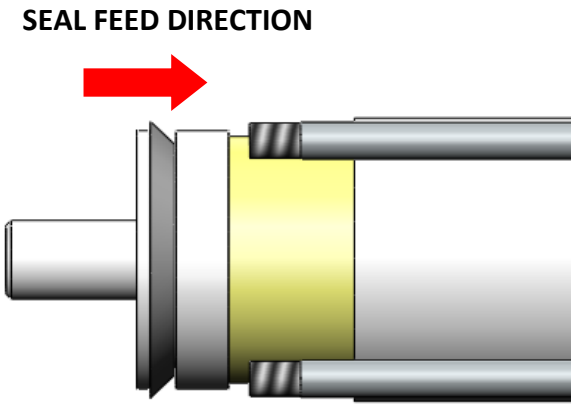

8. With a smooth and constant motion, push the membrane element into the housing so the brine seal enters the housing without coming out of the brine seal groove.

9. Re-install the end plugs by gently twisting the end cap while pushing it onto the housing.

10. Ensure that you do not pinch or fatigue any O-rings while re-installing the end plug. Push the end

    plug on until the plug is flush with the pressure vessel.

11. Insert the four rods through the plate and fasten using a 3/8 wrench and a flat screw driver.

12. Reconnect any fittings that may have been disconnected when the membrane pressure ves-sels were disassembled.

13. To Start-Up the system, please refer to the Initial Start-Up section of this manual. (See page 15)

CAUTION: WET MEMBRANES ARE SHIPPED IN A PRESERVATIVE SOLUTION. THE MEMBRANES MUST BE FLUSHED FOR AT LEAST 30 MINUTES TO RE-MOVE THE PRESERVATIVE FROM THE MEMBRANE. DISCARD ALL OF THE PERMEATE AND CONCENTRATE, WHICH IS PRODUCED DUR ING THE FLUSH PERIOD.

MANUALY FLUSHING THE SYSTEM

To manually flush the system, follow the preceding steps:

1. The system must powered operating during the flush procedure.
2. Press the Menu icon on the touch screen.

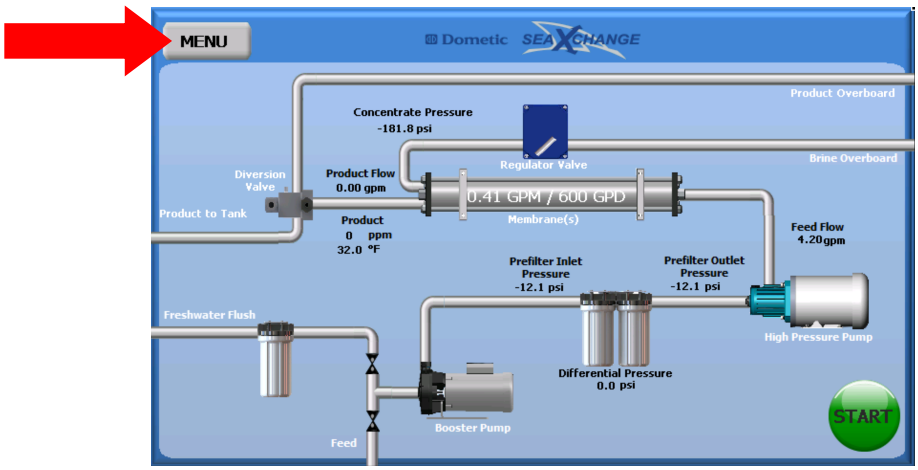

3. Press the SERVICE MENU button.

4. Press the FRESHWATER FLUSH button.

5. Press the down arrow on Mode and select the OFF option

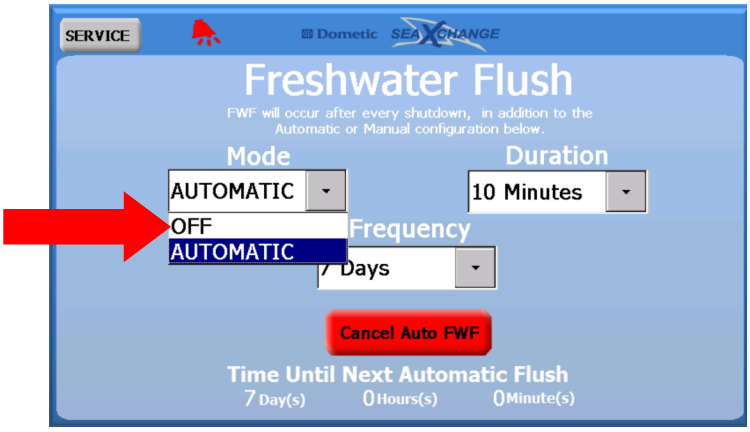

6. Press MANUAL FWF

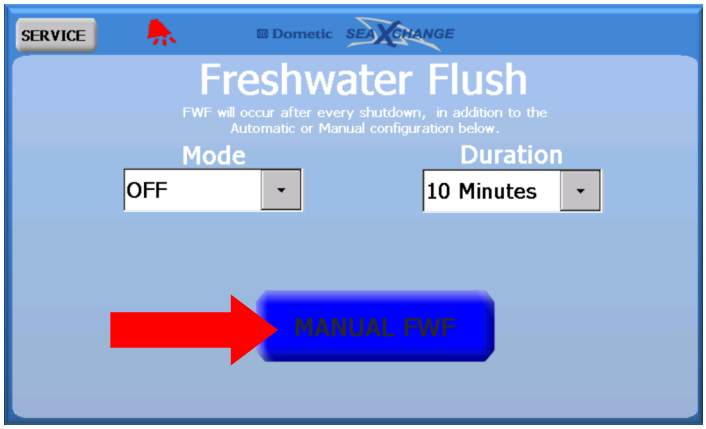

7. Allow the system to run for 10 to 20 minutes.

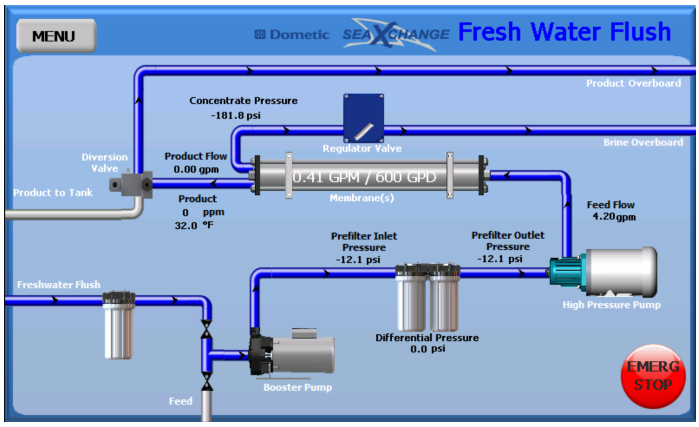

8. Press the EMERG STOP button to stop the manual FWF.

9. Repeat steps 3 – 5 to set the system back to automatic FWF.

PREPARING UNIT FOR STORAGE OR SHIPMENT

PRIOR TO SHIPPING OR STORING YOUR SYSTEM, THE SYSTEM SHOULD BE CLEANED WITH AN APPROPRIATE CLEANER, FLUSHED WITH WATER, AND PROTECTED FROM BIOLOGICAL ATTACK WITH AN APPROPRIATE SOLUTION FOR MEMBRANE ELEMENTS. THE MEMBRANE HOUSING(S) AND PLUMBING LINES OF THE SYSTEM MUST BE COMPLETELY DRAINED. ANY WATER REMAINING IN THE PLUMBING OF A SYSTEM MAY FREEZE, CAUSING SERIOUS DAMAGE.

PREPARING SYSTEM FOR STORAGE:

1. Totally immerse the elements in the membrane housing in a solution of 2 % Memstor, venting the air outside of the pressure vessels. Use the overflow technique: circulate the Memstor solution in such a way that the remaining air in the system is minimized after the recirculation is completed. After the pressure vessel is filled, the Memstor solution should be allowed to overflow through an opening located higher than the upper end of the highest pressure vessel being filled.

2. Separate the preservation solution from the air outside by closing all valves.

3. Repeat this process at least once a month.

During the shutdown period, the plant must be kept frost-free, or the temperature must not exceed 113°F (45°C).

HIGH PRESSURE PUMP OIL CHANGE

OIL CHANGE STEPS

1. Run unit for 30 minutes prior to draining oil
2. Drain the oil out of the pump by opening the oil drain valve. Dispose of oil properly.

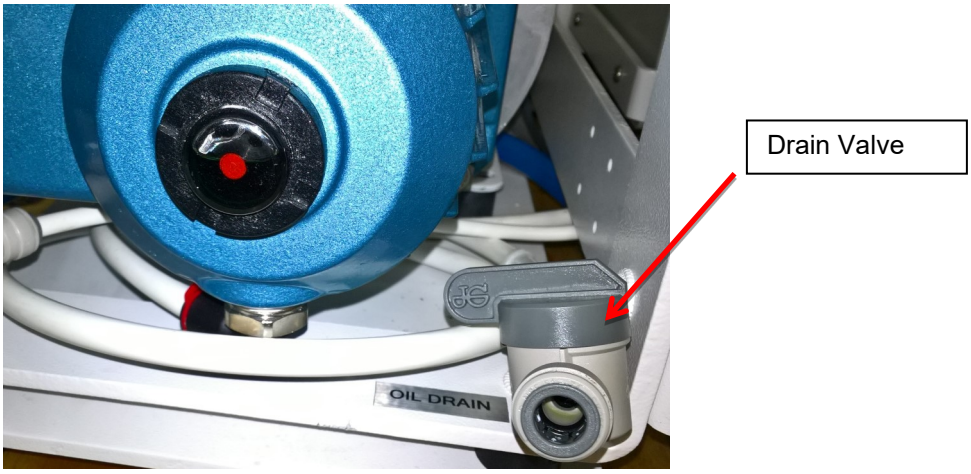

3. Close the drain valve on the high pressure pump drain.
4. Locate and remove oil fill cap.

5. Fill oil above the center of sight glass not exceeding the very top of the site glass. (refer to picture below)

6. Screw fill cap back onto top of high pressure pump

NOTE: OIL LEVEL CAN ONLY BE CHECKED WITH THE UNIT NOT RUNNING

4. TROUBLESHOOTING

ABNORMAL PRODUCT FLOW

As time progresses, the efficiency of the membrane will be reduced. In general, the salt rejection does not change significantly until two or three years after installation when operated on properly pretreated feed water. The permeate flow rate will begin to decline slightly after one year of operation, but can be extended with diligent flushing and cleaning of the system. A high pH and/or precipitation of hardness can cause premature loss in rejection.

Permeate flow should be within 20% of the rated production, after correcting the feed water temperatures above or below 77°F. Check your permeate flow meter to determine the permeate flow rate.

NOTE: TO DETERMINE THE TEMPERATURE CORRECTION FACTOR, LOCATE THE TEMPERATURE CORRECTION TABLE IN THIS USER'S MANUAL AND FOLLOW THE DIRECTIONS. PG. 46

DIVERSION VALVE

BY-PASS

If the electrical portion of the solenoid fails or the controller fails to energize the solenoid, a manual bypass on the diversion valve may be utilized if the product water is found to be acceptable. Refer to picture below and the Diversion Valve Manual on page 124.

NOTE!

- When the manual control is locked, the valve cannot be actuated electrically.

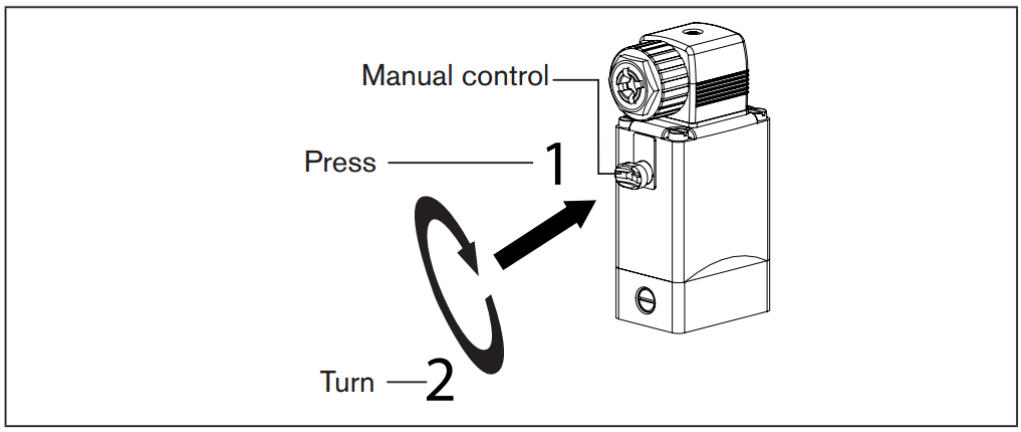

TEMPERATURE CORRECTION FACTORS FOR MEMBRANE

Find the temperature correction factor (TCF) from the table below. Divide the rated permeate flow at 77°F by the temperature correction factor. The result is the permeate flow at the desired temperature. (See example on the next page)

°F = (°C x 9/5)+ 32 Corrected Flow Rate = (Measured Flow Rate)*(TCF @ Feed Water Temp.)

Temperature °F (°C)	Temperature Correction Factor	Temperature °F (°C)	Temperature Correction Factor	Temperature °F (°C)	Temperature Correction Factor	Temperature °F (°C)	Temperature Correction Factor	Temperature °F (°C)	Temperature Correction Factor
50.0 (10.0)	1.711	57.2 (14.0)	1.475	64.4 (18.0)	1.276	71.6 (22.0)	1.109	78.8 (26.0)	0.971
50.2 (10.1)	1.705	57.4 (14.1)	1.469	64.6 (18.1)	1.272	71.8 (22.1)	1.105	79.0 (26.1)	0.968
50.4 (10.2)	1.698	57.6 (14.2)	1.464	64.8 (18.2)	1.267	72.0 (22.2)	1.101	79.2 (26.2)	0.965
50.5 (10.3)	1.692	57.7 (14.3)	1.459	64.9 (18.3)	1.262	72.1 (22.3)	1.097	79.3 (26.3)	0.962
50.7 (10.4)	1.686	57.9 (14.4)	1.453	65.1 (18.4)	1.258	72.3 (22.4)	1.093	79.5 (26.4)	0.959
50.9 (10.5)	1.679	58.1 (14.5)	1.448	65.3 (18.5)	1.254	72.5 (22.5)	1.090	79.7 (26.5)	0.957
51.1 (10.6)	1.673	58.3 (14.6)	1.443	65.5 (18.6)	1.249	72.7 (22.6)	1.086	79.9 (26.6)	0.954
51.3 (10.7)	1.667	58.5 (14.7)	1.437	65.7 (18.7)	1.245	72.9 (22.7)	1.082	80.1 (26.7)	0.951
51.4 (10.8)	1.660	58.6 (14.8)	1.432	65.8 (18.8)	1.240	73.0 (22.8)	1.078	80.2 (26.8)	0.948
51.6 (10.9)	1.654	58.8 (14.9)	1.427	66.0 (18.9)	1.236	73.2 (22.9)	1.075	80.4 (26.9)	0.945
51.8 (11.0)	1.648	59.0 (15.0)	1.422	66.2 (19.0)	1.232	73.4 (23.0)	1.071	80.6 (27.0)	0.943
52.0 (11.1)	1.642	59.2 (15.1)	1.417	66.4 (19.1)	1.227	73.6 (23.1)	1.067	80.8 (27.1)	0.940
52.2 (11.2)	1.636	59.4 (15.2)	1.411	66.6 (19.2)	1.223	73.8 (23.2)	1.064	81.0 (27.2)	0.937
52.3 (11.3)	1.630	59.5 (15.3)	1.406	66.7 (19.3)	1.219	73.9 (23.3)	1.060	81.1 (27.3)	0.934
52.5 (11.4)	1.624	59.7 (15.4)	1.401	66.9 (19.4)	1.214	74.1 (23.4)	1.056	81.3 (27.4)	0.932
52.7 (11.5)	1.618	59.9 (15.5)	1.396	67.1 (19.5)	1.210	74.3 (23.5)	1.053	81.5 (27.5)	0.929
52.9 (11.6)	1.611	60.1 (15.6)	1.391	67.3 (19.6)	1.206	74.5 (23.6)	1.049	81.7 (27.6)	0.926
53.1 (11.7)	1.605	60.3 (15.7)	1.386	67.5 (19.7)	1.201	74.7 (23.7)	1.045	81.9 (27.7)	0.924
53.2 (11.8)	1.600	60.4 (15.8)	1.381	67.6 (19.8)	1.197	74.8 (23.8)	1.042	82.0 (27.8)	0.921
53.4 (11.9)	1.594	60.6 (15.9)	1.376	67.8 (19.9)	1.193	75.0 (23.9)	1.038	82.2 (27.9)	0.918
53.6 (12.0)	1.588	60.8 (16.0)	1.371	68.0 (20.0)	1.189	75.2 (24.0)	1.035	82.4 (28.0)	0.915
53.8 (12.1)	1.582	61.0 (16.1)	1.366	68.2 (20.1)	1.185	75.4 (24.1)	1.031	82.6 (28.1)	0.913
54.0 (12.2)	1.576	61.2 (16.2)	1.361	68.4 (20.2)	1.180	75.6 (24.2)	1.028	82.8 (28.2)	0.910
54.1 (12.3)	1.570	61.3 (16.3)	1.356	68.5 (20.3)	1.176	75.7 (24.3)	1.024	82.9 (28.3)	0.908
54.3 (12.4)	1.564	61.5 (16.4)	1.351	68.7 (20.4)	1.172	75.9 (24.4)	1.021	83.1 (28.4)	0.905
54.5 (12.5)	1.558	61.7 (16.5)	1.347	68.9 (20.5)	1.168	76.1 (24.5)	1.017	83.3 (28.5)	0.902
54.7 (12.6)	1.553	61.9 (16.6)	1.342	69.1 (20.6)	1.164	76.3 (24.6)	1.014	83.5 (28.6)	0.900
54.9 (12.7)	1.547	62.1 (16.7)	1.337	69.3 (20.7)	1.160	76.5 (24.7)	1.010	83.7 (28.7)	0.897
55.0 (12.8)	1.541	62.2 (16.8)	1.332	69.4 (20.8)	1.156	76.6 (24.8)	1.007	83.8 (28.8)	0.894
55.2 (12.9)	1.536	62.4 (16.9)	1.327	69.6 (20.9)	1.152	76.8 (24.9)	1.003	84.0 (28.9)	0.892
55.4 (13.0)	1.530	62.6 (17.0)	1.323	69.8 (21.0)	1.148	77.0 (25.0)	1.000	84.2 (29.0)	0.889
55.6 (13.1)	1.524	62.8 (17.1)	1.318	70.0 (21.1)	1.144	77.2 (25.1)	0.997	84.4 (29.1)	0.887
55.8 (13.2)	1.519	63.0 (17.2)	1.313	70.2 (21.2)	1.140	77.4 (25.2)	0.994	84.6 (29.2)	0.884
55.9 (13.3)	1.513	63.1 (17.3)	1.308	70.3 (21.3)	1.136	77.5 (25.3)	0.991	84.7 (29.3)	0.882
56.1 (13.4)	1.508	63.3 (17.4)	1.304	70.5 (21.4)	1.132	77.7 (25.4)	0.988	84.9 (29.4)	0.879
56.3 (13.5)	1.502	63.5 (17.5)	1.299	70.7 (21.5)	1.128	77.9 (25.5)	0.985	85.1 (29.5)	0.877
56.5 (13.6)	1.496	63.7 (17.6)	1.294	70.9 (21.6)	1.124	78.1 (25.6)	0.982	85.3 (29.6)	0.874
56.7 (13.7)	1.491	63.9 (17.7)	1.290	71.1 (21.7)	1.120	78.3 (25.7)	0.979	85.5 (29.7)	0.871
56.8 (13.8)	1.486	64.0 (17.8)	1.285	71.2 (21.8)	1.116	78.4 (25.8)	0.977	85.6 (29.8)	0.869
57.0 (13.9)	1.480	64.2 (17.9)	1.281	71.4 (21.9)	1.112	78.6 (25.9)	0.974	85.8 (29.9)	0.866

If a system is rated to produce 5 gpm of permeate water @ 77° F. The same system will produce more water at a higher temperature. It will also produce less water at a lower temperature. Use the temperature correction table to obtain the correct flow.

Example:

1.25 gpm @ 59° F (1.25÷1.42=.88 gpm)

1.25 gpm @ 77° F (1.25÷1=1.25 gpm)

1.25 gpm @ 84° F (1.25÷0.89=1.4 gpm)

PROBLEM	CAUSE	SOLUTION
System is going off on low pressure alarm	1. Sea cock valve is closed 2. There is air in the system. 3. The Pre-filters are clogged. 4. Leaks	1. Open the sea cock valve 2. Perform a “Manual FWF” for at least 1 minute. This will help purge any air out of the system. SEE MANUAL FWF. 3. Check the pressure difference between the Pre- filter Inlet and the Pre-filter outler. Pressure difference should not be more than 15psi. If yes, change the Pre-filter for new ones. 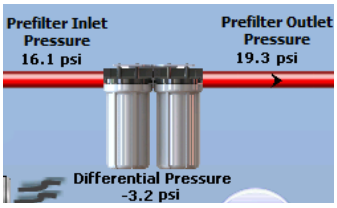 4. Tighten or replace leaking part.
Low product water flow	1. Cold feed water 2. Defective membrane brine seal or membrane installed backwards. 3. Fouled or scaled membranes.	1. See temperature correction guide in the manual. 2. Replace brine seal or reposition membrane. SEE MEMBRANE INSTALLATION. 3. Replace membrane.
High product water flow	1. Warm water feed 2. Damaged membrane O-rings 3. Damaged or oxidized membranes.	1. See temperature correction guide in the manual. 2. Open the membrane vessel and inspect O-rings. If damaged, replace the O-rings. SEE DWG SX0105 PG 4. 3. Replace membrane
Poor water quality	1. Damaged product O-rings. 2. Damaged or oxidized membranes.	1. Open the membrane vessel and inspect O-rings. If damaged, replace the O-rings. SEE DWG SX0105 PG 4. 2. Replace membrane.

5. XTC TOUCH SCREEN NAVIGATION

HOME SCREEEN

From any screen the “Sea Xchange” logo can be pressed to return to the home screen.

There is a lot of information on the home screen that is crucial for the proper operation of the system. Different component images can be pressed to bring up sub-menus for those components.

Those components are:

- Regulator Valve
- Diversion Valve
- High Pressure Pump
- Booster Pump

This sub-menus give the user information or options for the specific component. This manual will go through all the different options available.

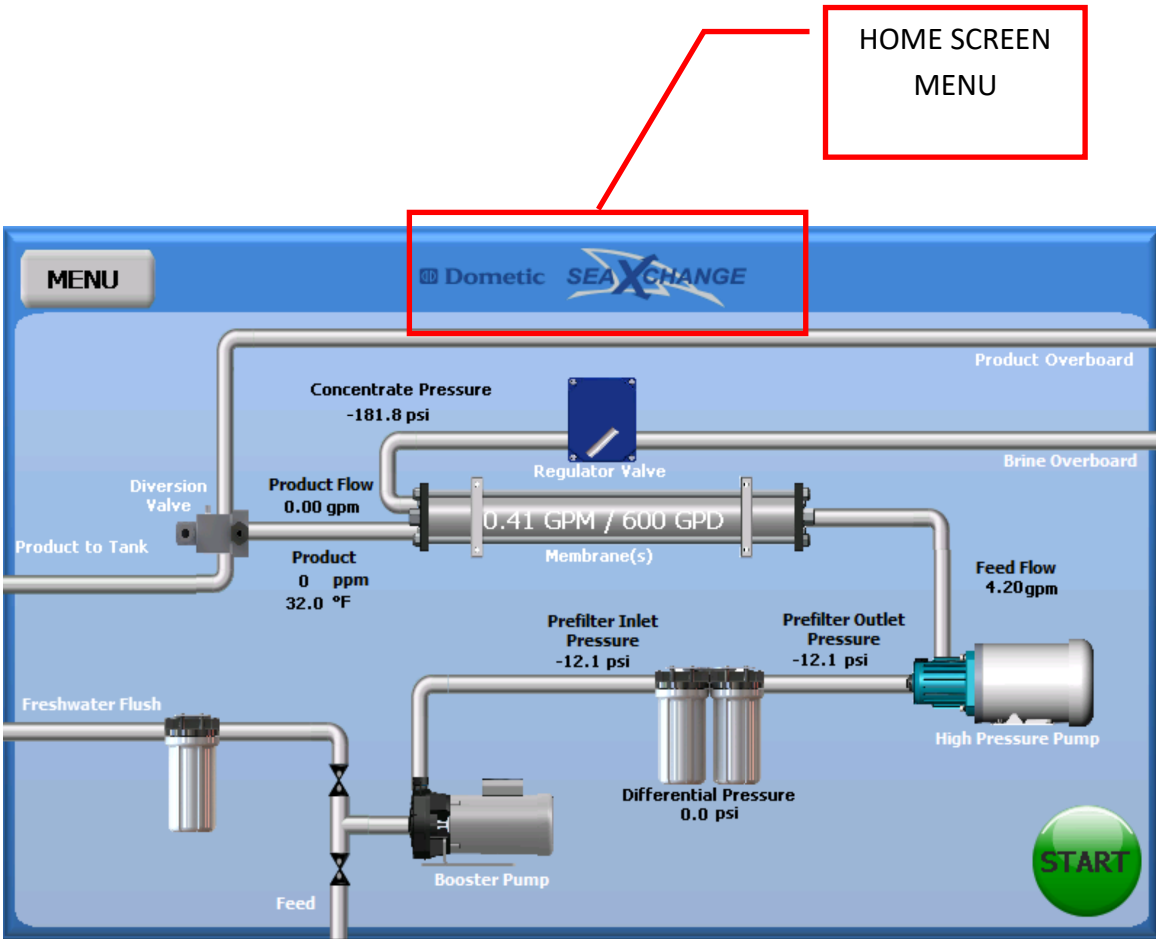

STANDARD OPERATION

1. Simply press the Start button and the system will automatically adjust to produce water.

The booster pump will start to run, and the high pressure pump will start to count down its delay. The screen will indicate water flow, inlet pressure and outlet pressure. It will also show the pressure differential between the pre-filters. The emergency stop button will appear at this time if a shut down is necessary.

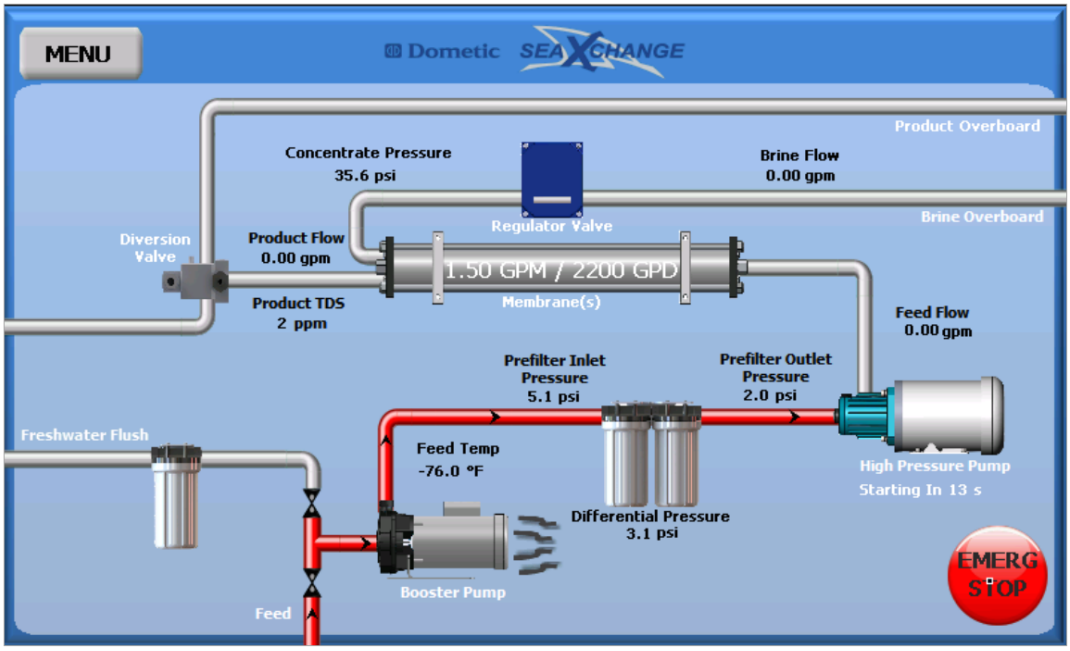

2. After the high pressure pump delay has expired it will begin to operate. The regulator valve will start to close automatically to the systems rated flow. The flow rates, and pressures will start to register.

3. As the unit operates and pressure starts to build up, the stop and the auto shut down buttons will appear.

4. When the unit starts making product water below the diversion's valve set point, the valve will activate and send the product water to the vessels fresh water tank.

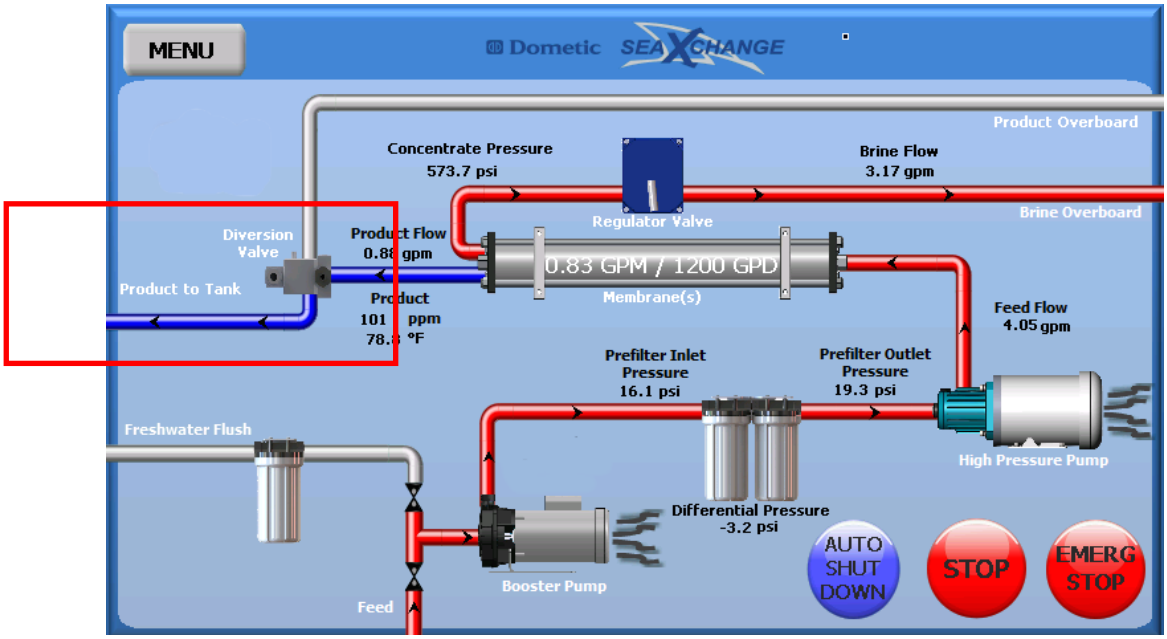

4. To stop operation of system there are three choices:

A. Normal shut down process is to press the stop button. Shutting down will appear on the screen and the high pressure pump will stop, and the regulator valve will begin to open.

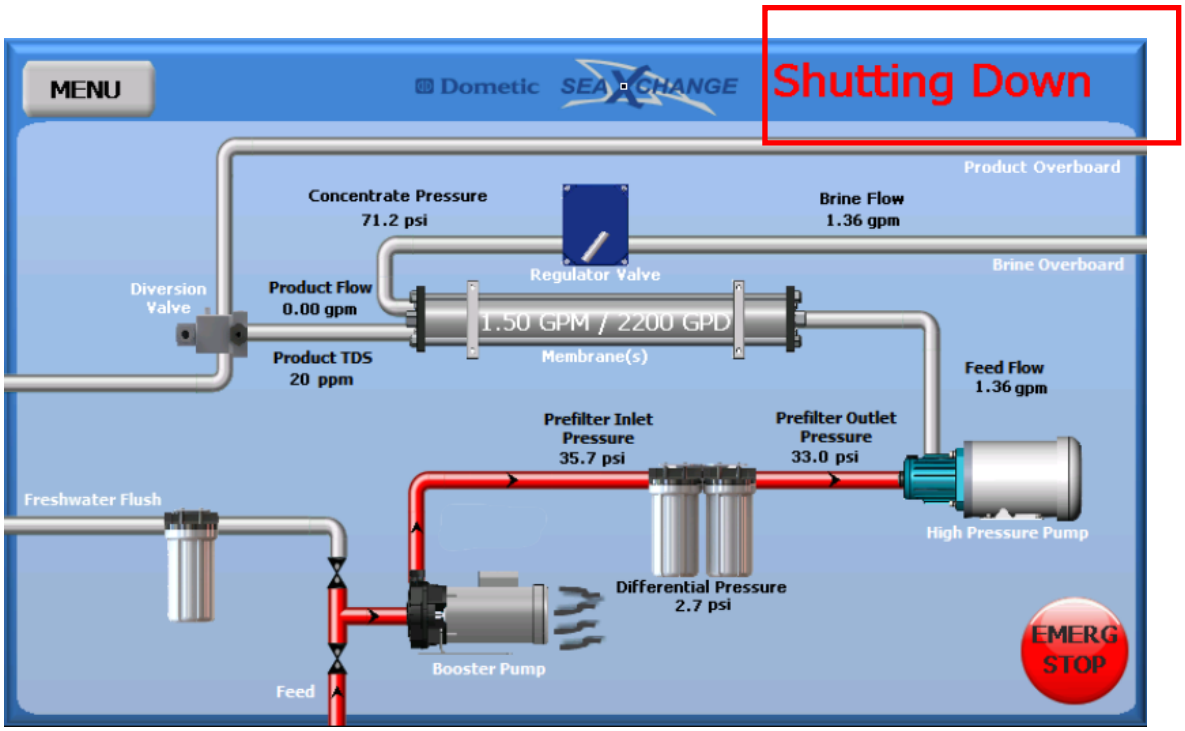

After the valve is all the way open, the booster pump will stop. After the system has shut down, it will do an automatic fresh water flush.

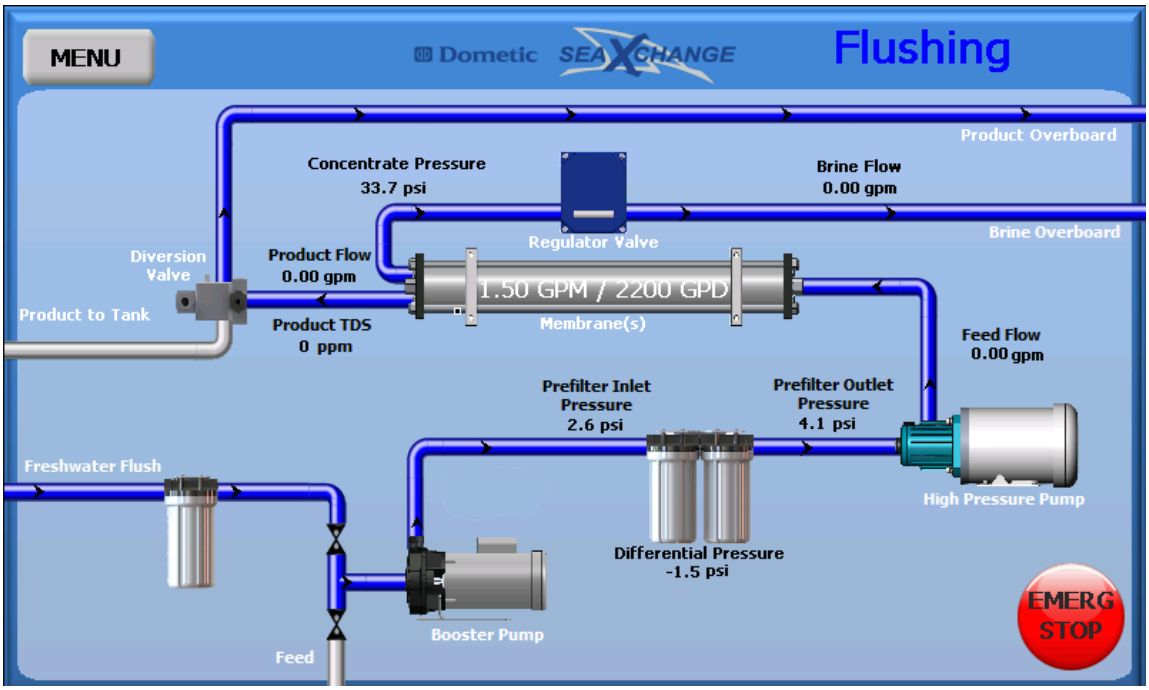

B. Emergency Shut Down button . Selecting this option will shut down the system as fast as possible and it will not do a fresh water flush.

C. Auto Shut Down button. Press this button and get the following options:

I. Auto Shut Down by time

II. Auto Shut Down by volume

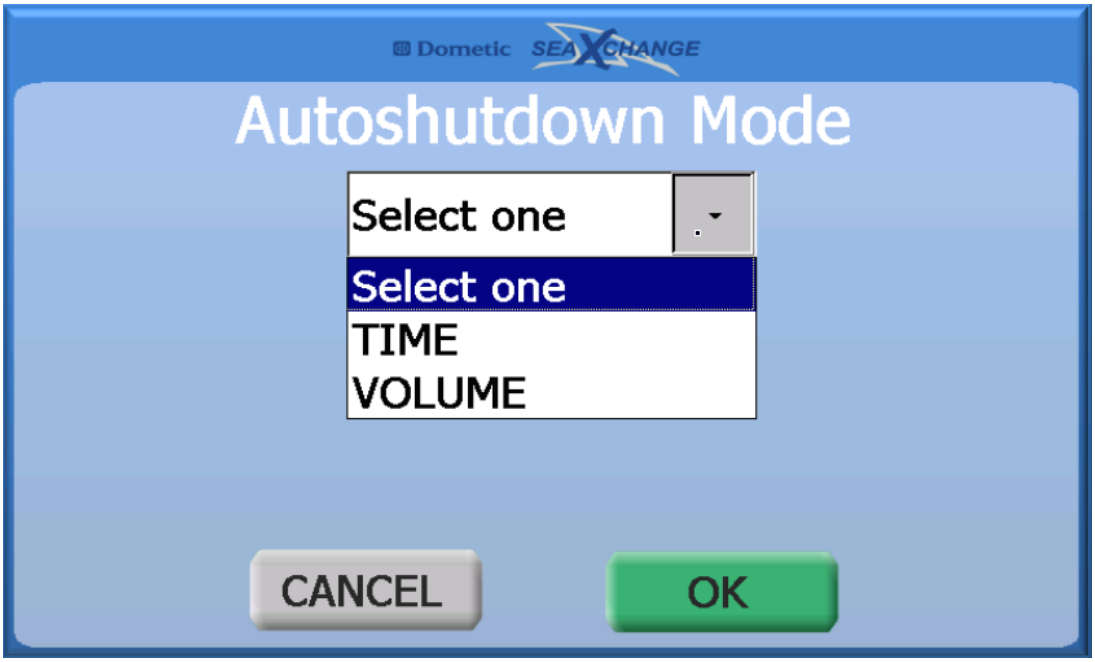

I. Auto Shut Down by time

When “Time” is selected, there will be a sliding scale to select the amount of time the system will operate for.

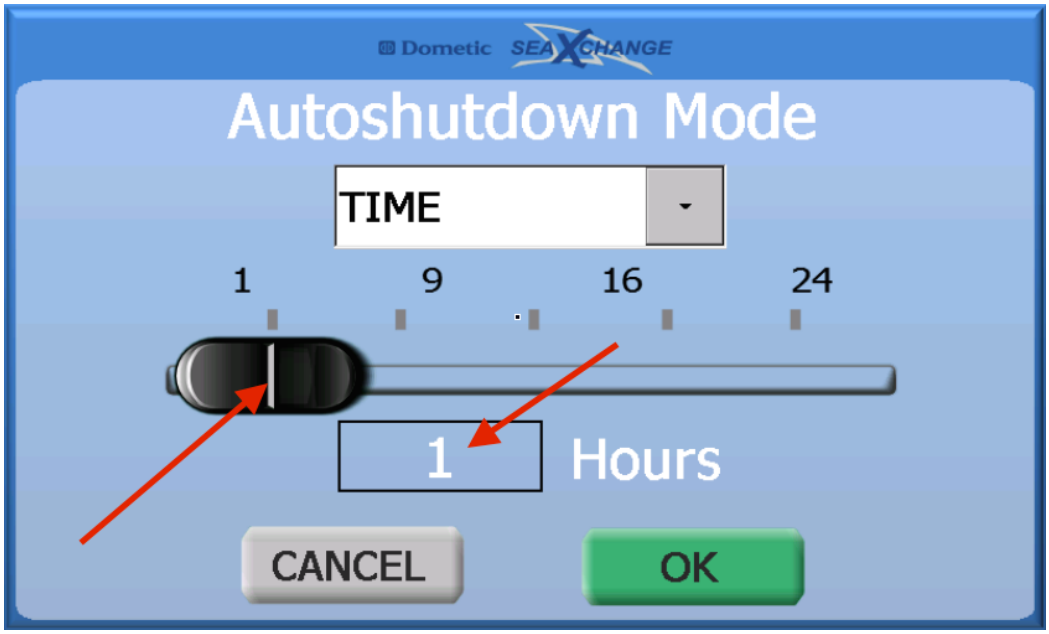

Touch the “Hours” box and you can manually type in the hours. Press enter after entering the hours. Then press OK.

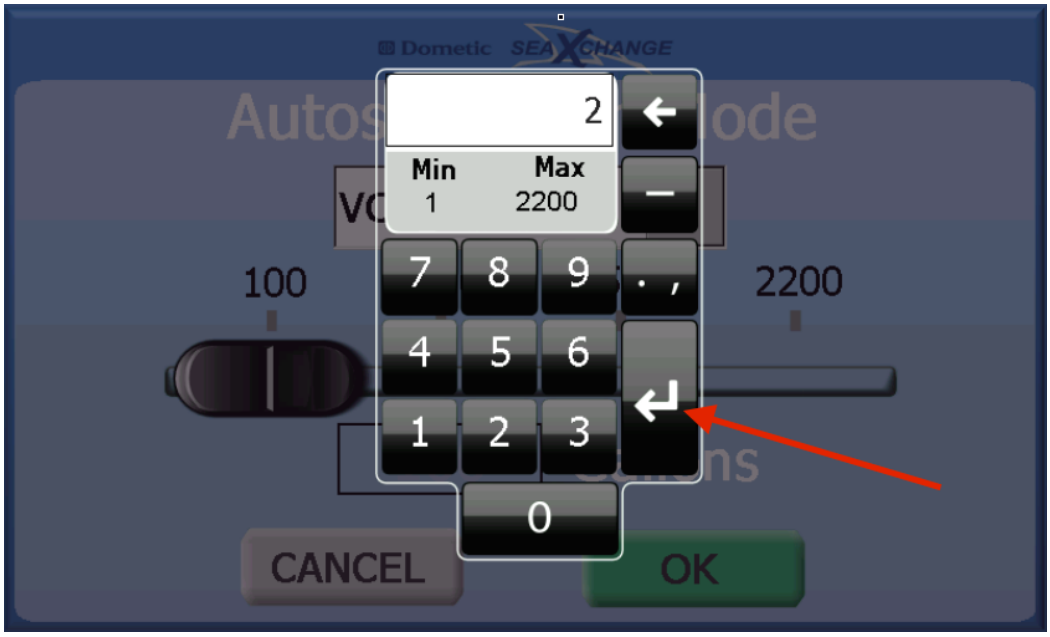

I. Auto Shut Down by volume

When “Volume” is selected, there will be a sliding scale to select the volume of water the system will produce.

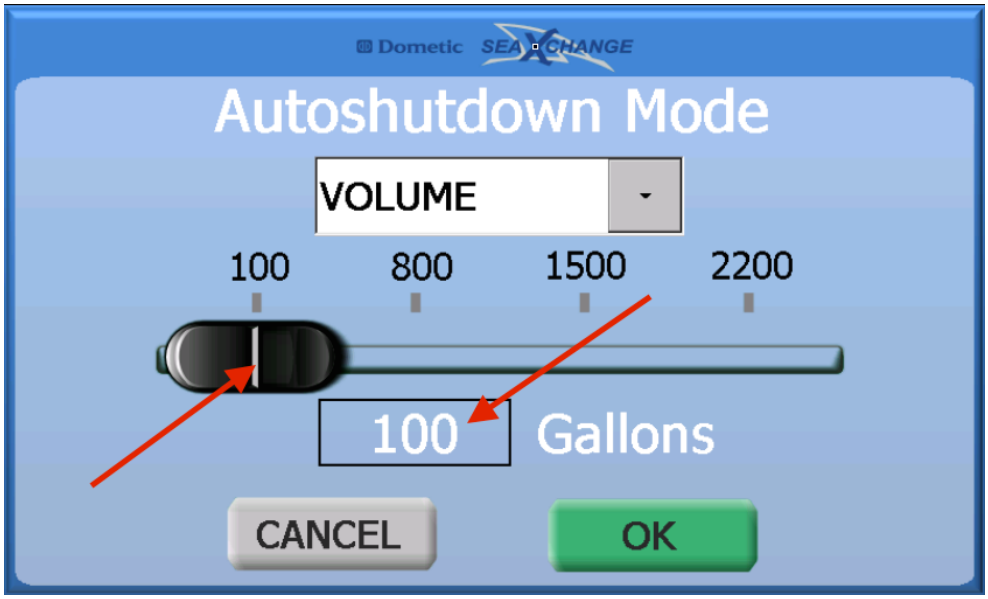

Touch the “Gallons” box and you can manually type in the gallons. Press enter after entering the gallons. Then press OK.

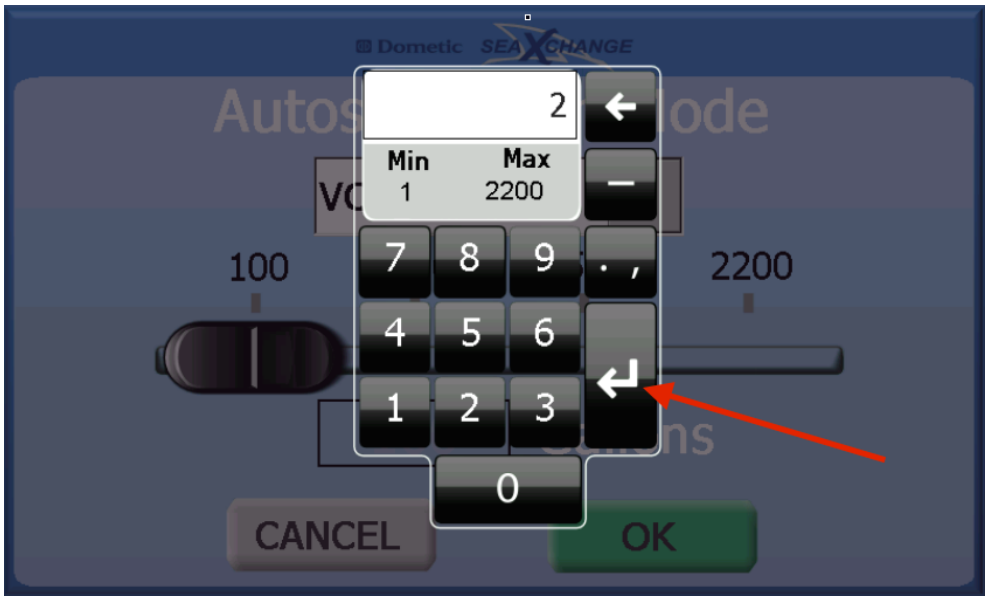

When the is in auto shut down mode, there will be a count on the home screen that will track the production or the time of operation. When the system has satisfied the setting, it will shut down and do a fresh water flush.

Time Remaining

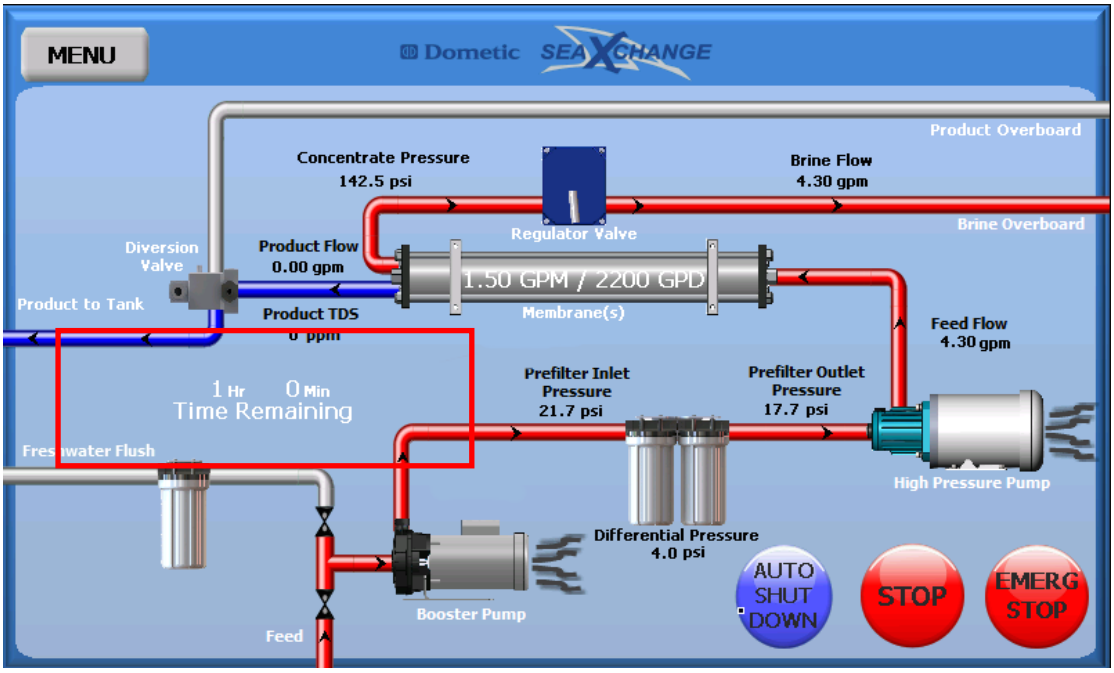

Gallons Produced

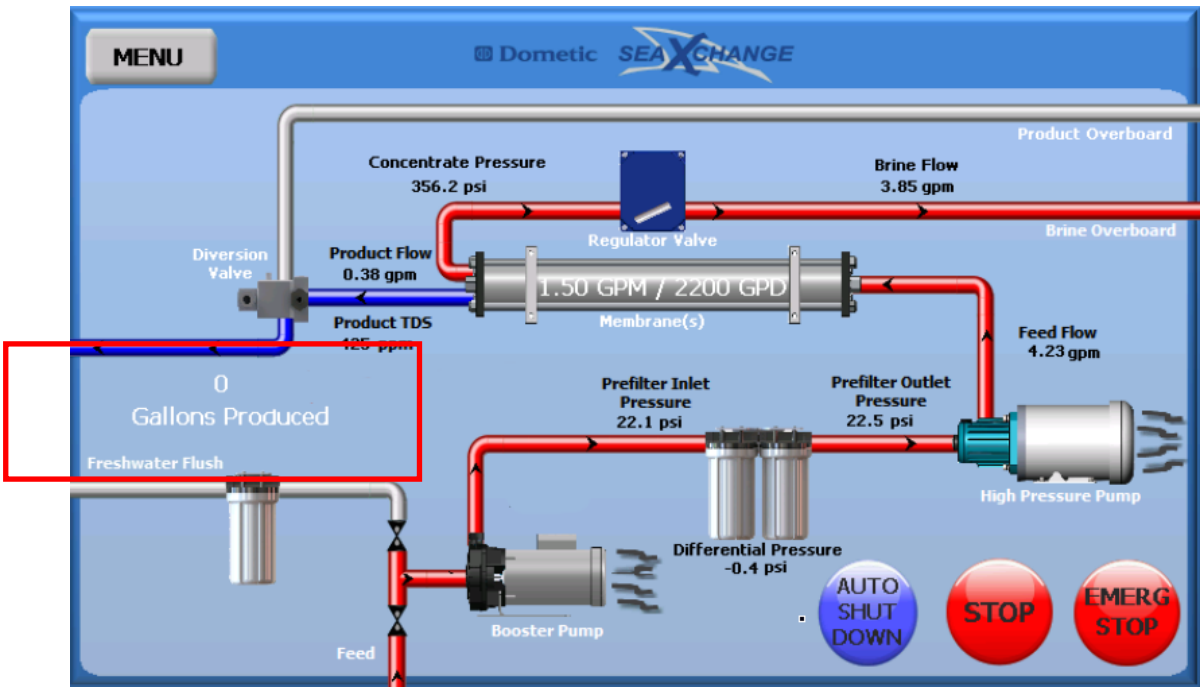

MANUAL RUN PROCEDURE

1. Prime the system by touching the Booster Pump image

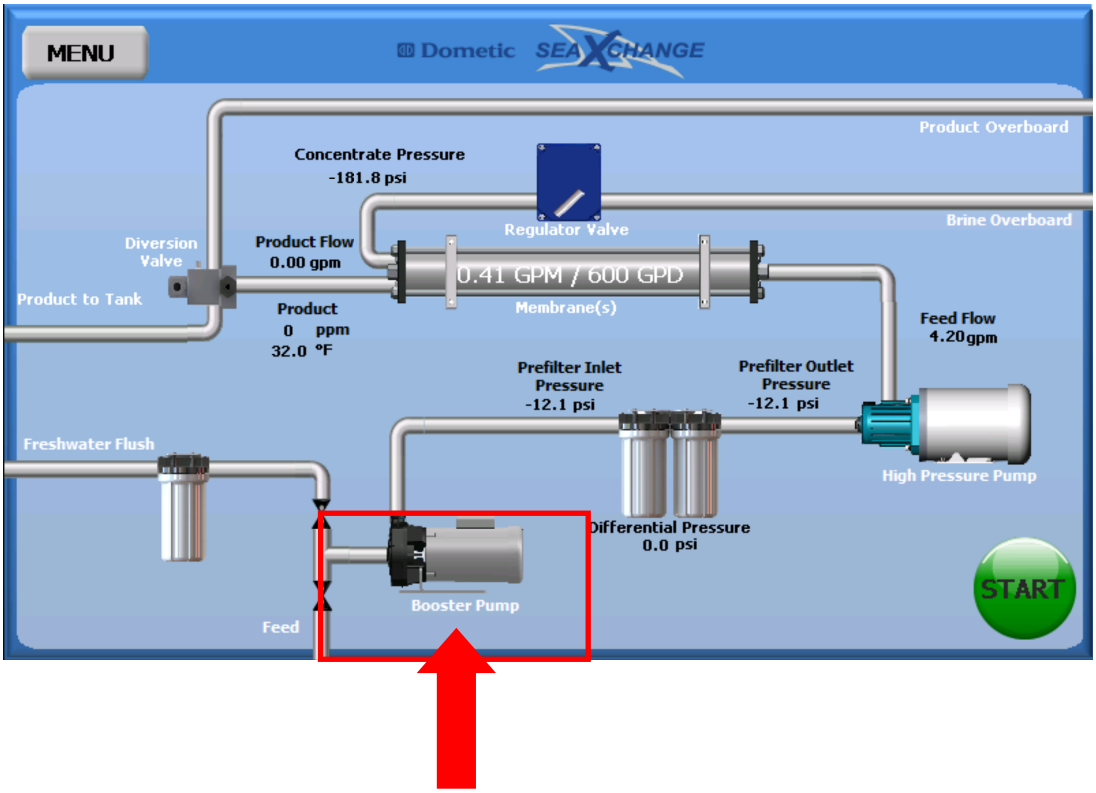

2. Press the "ON" button, then press the "X" button to exit the menu. When the Booster Pump is running wavy line should appear to the right of the Booster Pump image indicating that the motor is on.

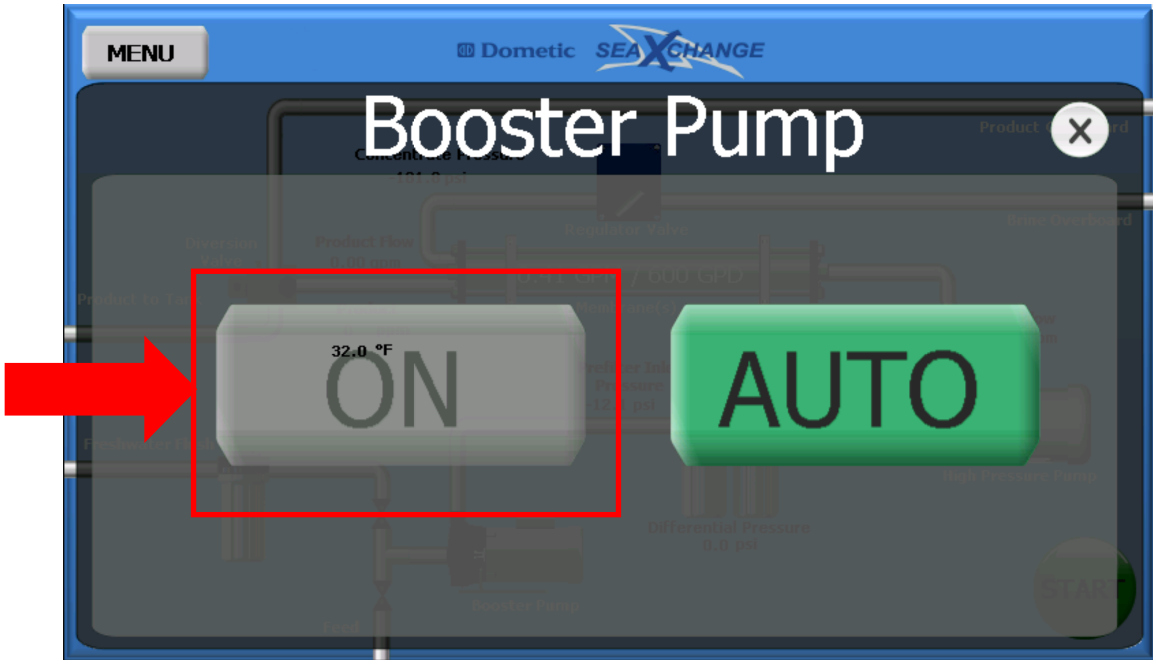

3. Press the High Pressure Pump image

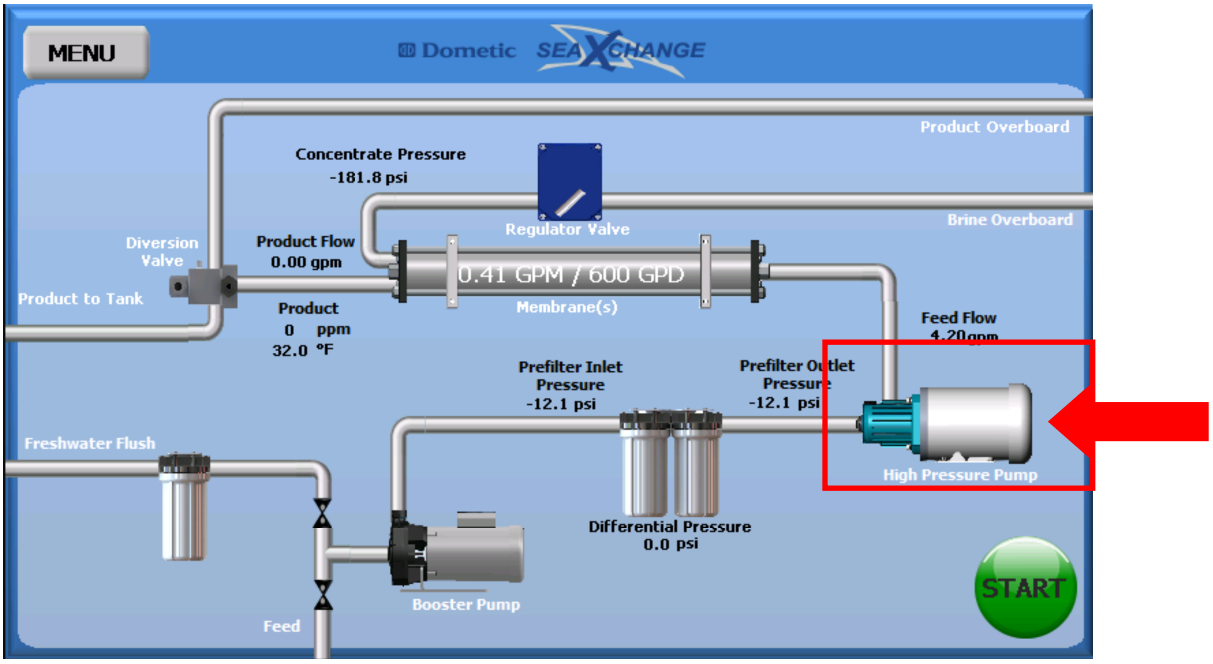

4. Press the "ON" button, then press the "X" button to exit the menu.

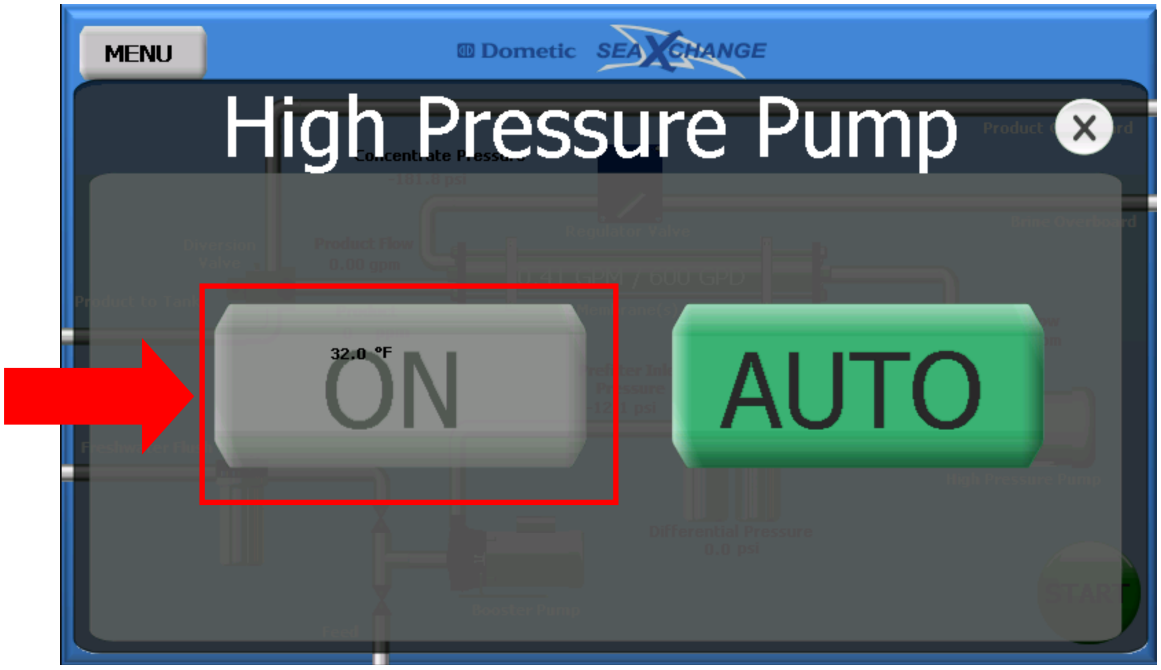

5. Press the Regulator Valve icon

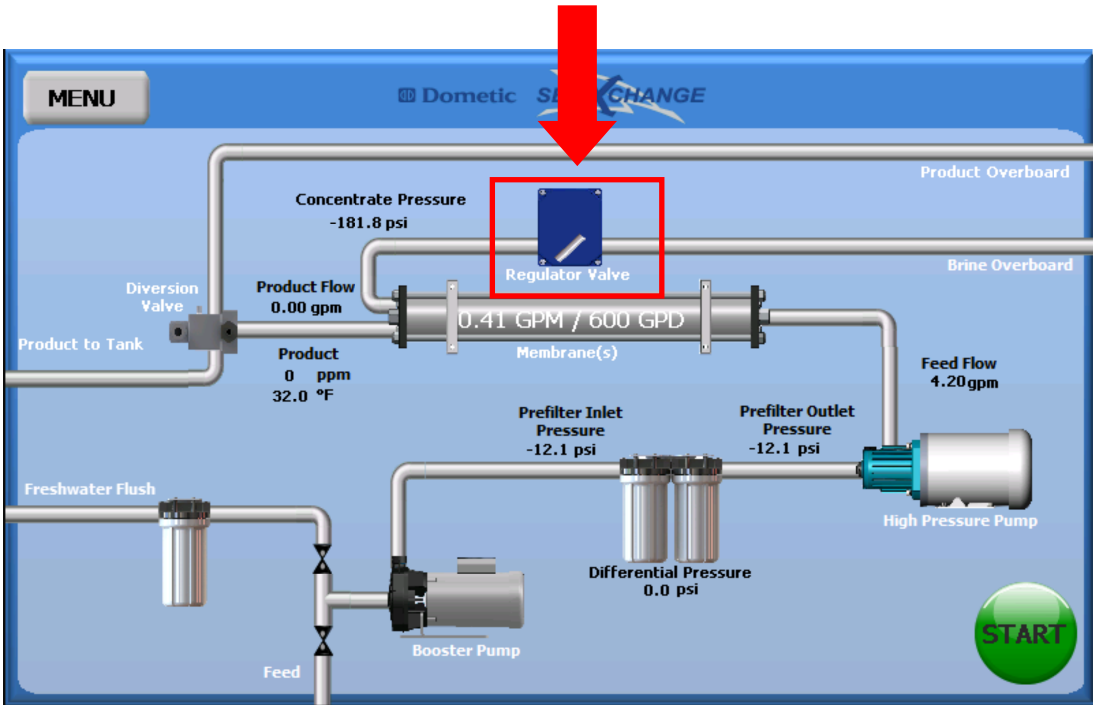

6. Press the down arrow to select “Manual –PLC” to digitally input a number for the valve to turn. The valve closes in % numbers.

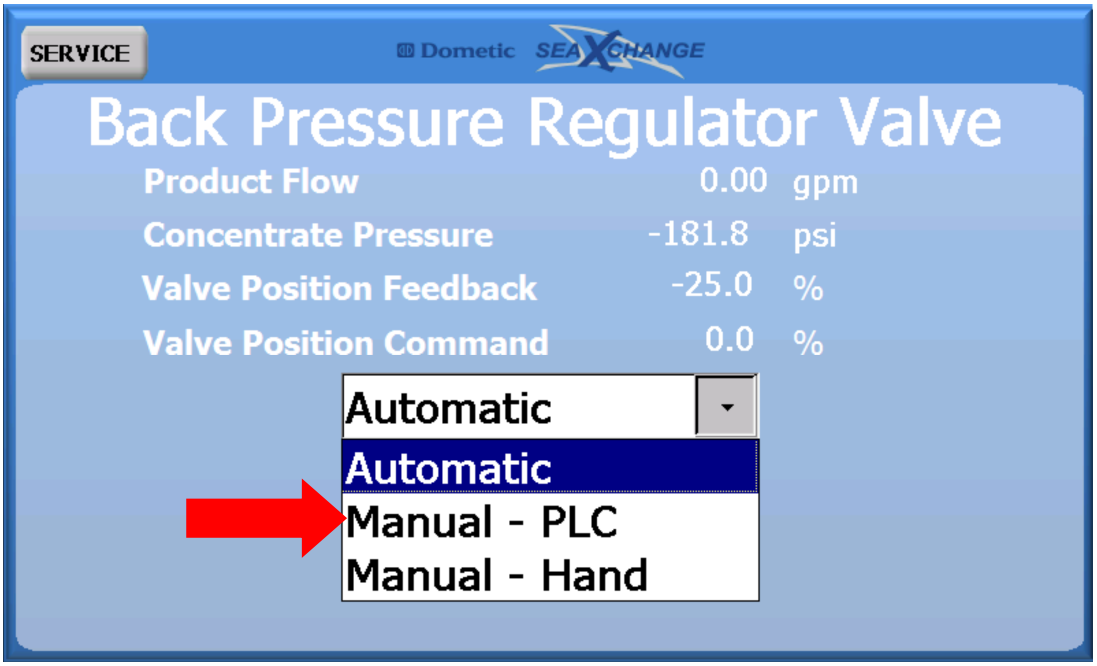

6. Press the plus or minus icons to move close or open the valve digitally. You can also press the number box to enter set number for the valve to go to.

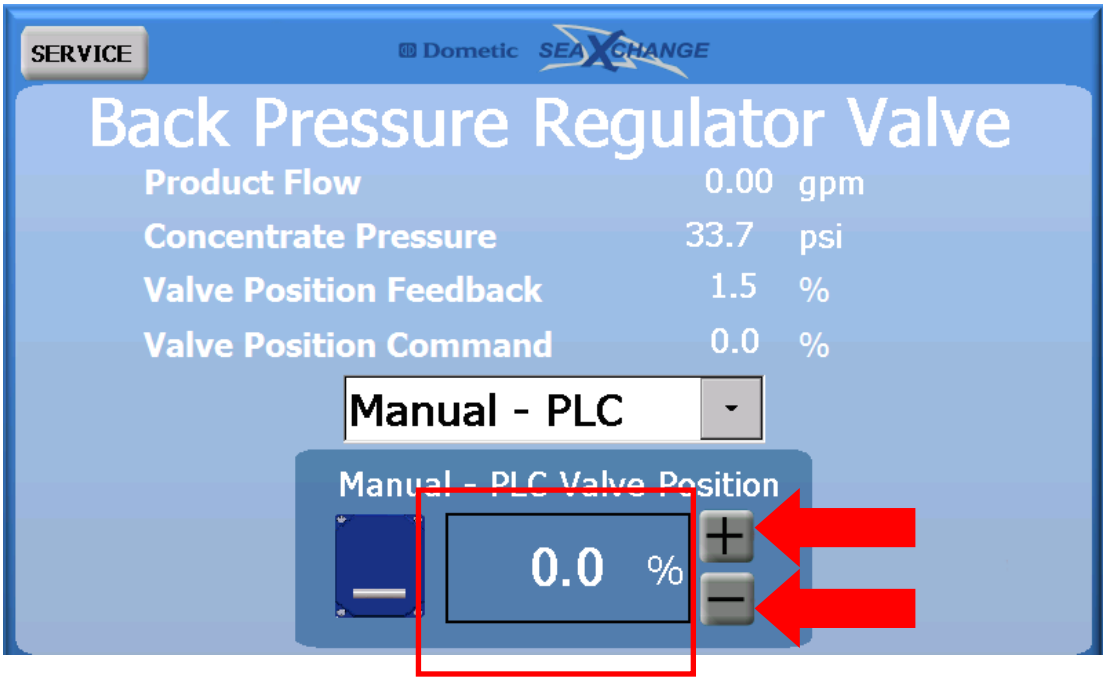

When the "Manual-Hand option is pressed you are able to mechanically turn the valve with you hand.

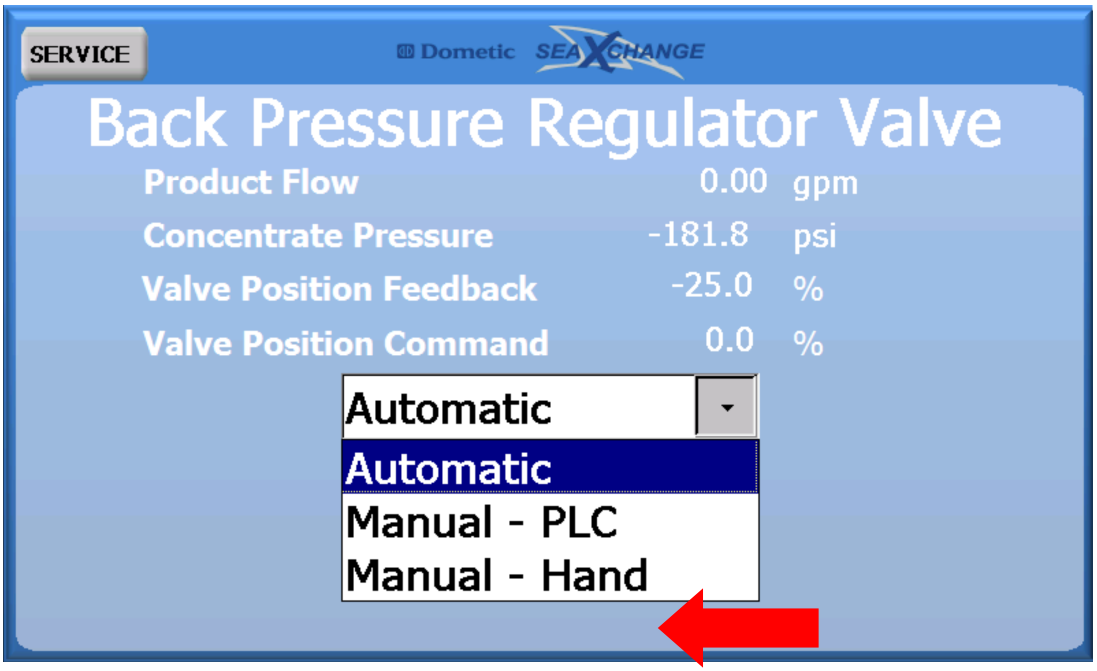

The following icon message will appear on the Home Screen:

Manually or electronically start turning the valve until you reach you rated product flow or you reach 850 PSI, which ever comes first.

7. The Diversion valve is factory set to 650 ppm.

A. To change the set point, just press the Diversion valve image access the sub-menu. Slide the scale to adjust the Set point or simply press the box and manually enter a number followed by the Enter key.

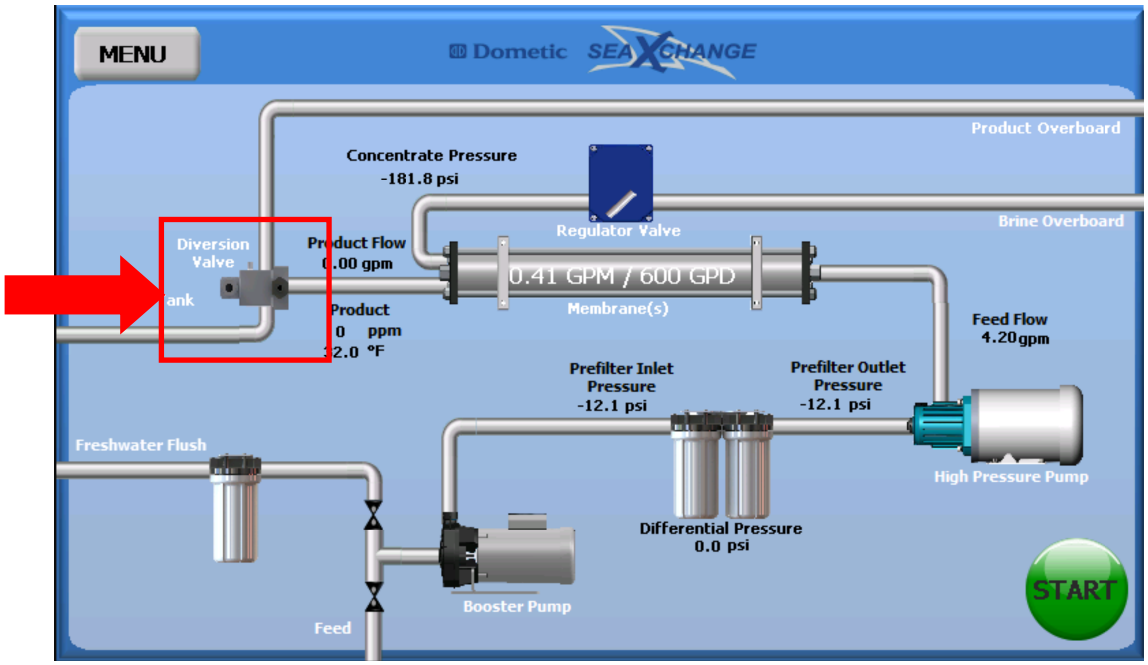

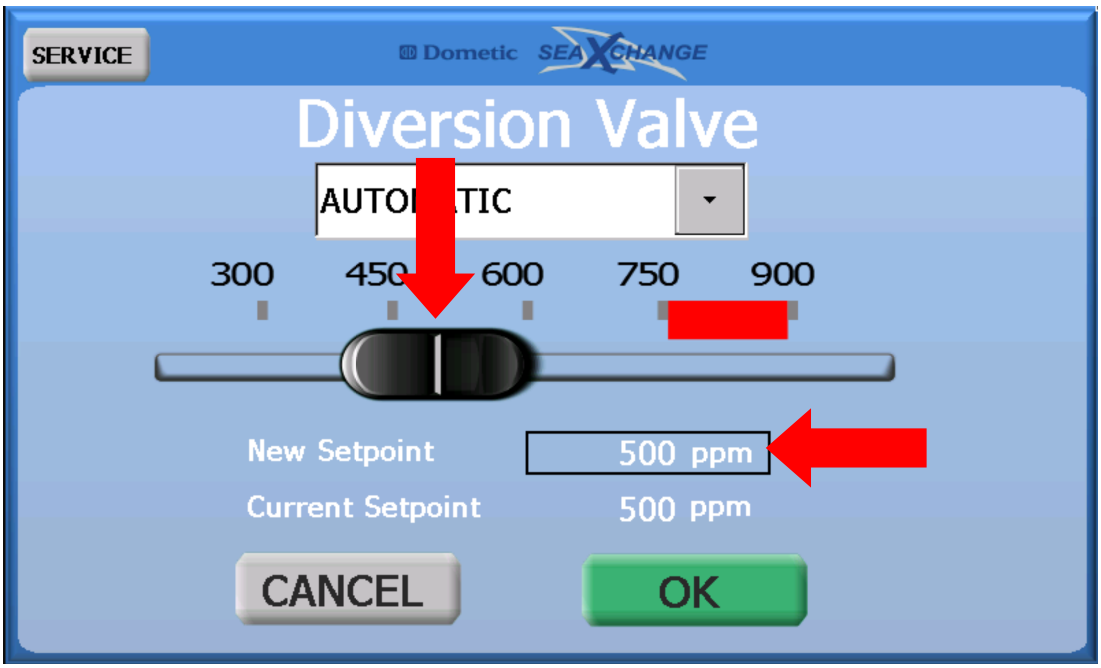

8. Press the Diversion Valve icon and select the down arrow from the selection menu and choose manual override.

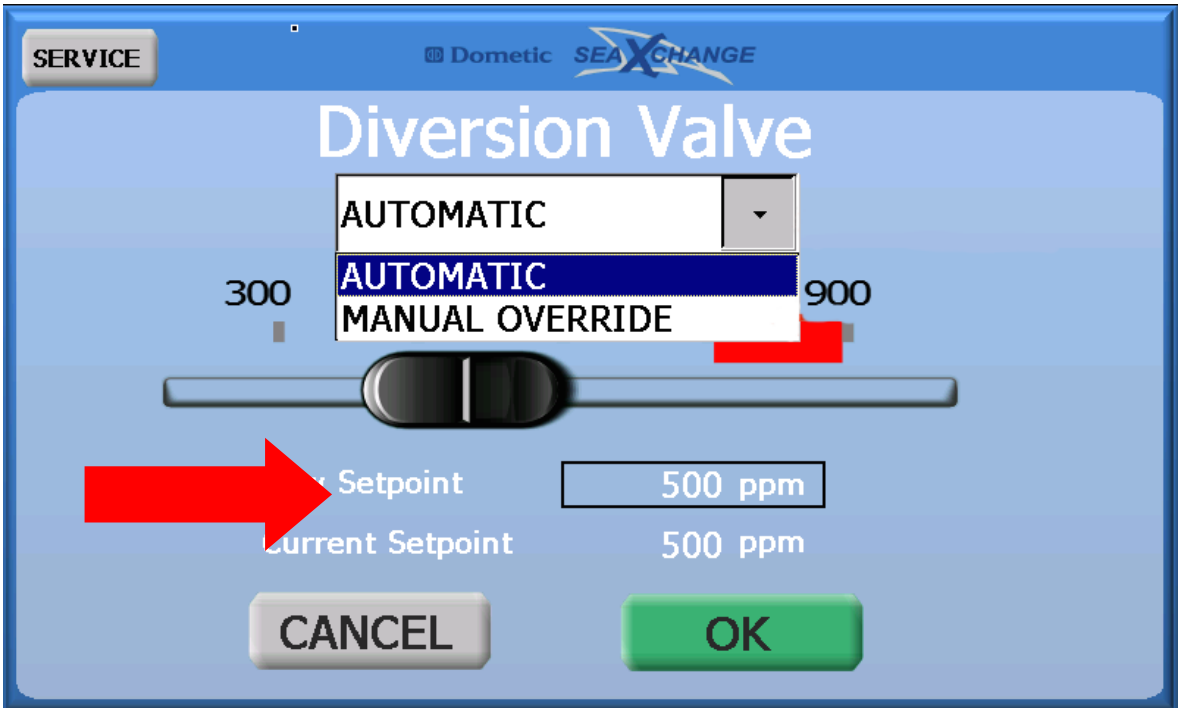

DIVERT WATER will send water to the ships fresh water tank

OPEN VALVE will send water overboard

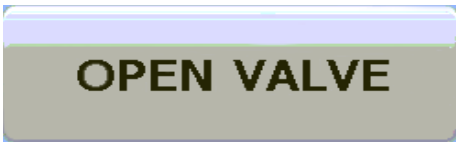

9. To **SHUT DOWN** the system simply reverse steps 1 though 8 and continue to do a Fresh Water Flush as depicted on the following page.

MANUAL FRESH WATER FLUSH

1. Press the Fresh Water Flush image or select Fresh Water Flush from the service menu.

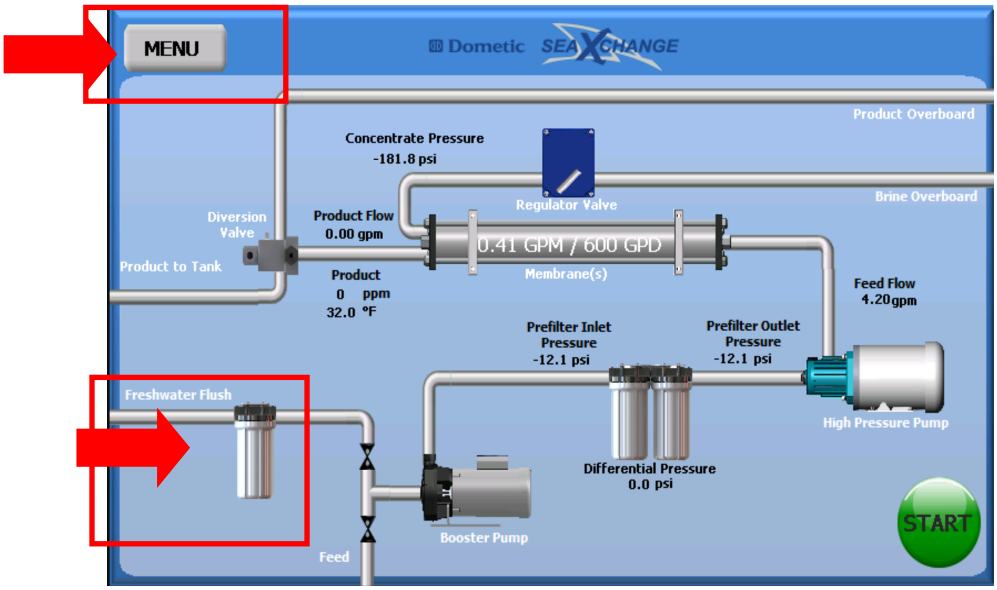

2. Press the down arrow on Mode and select the OFF option in order to activate MANUAL FWF

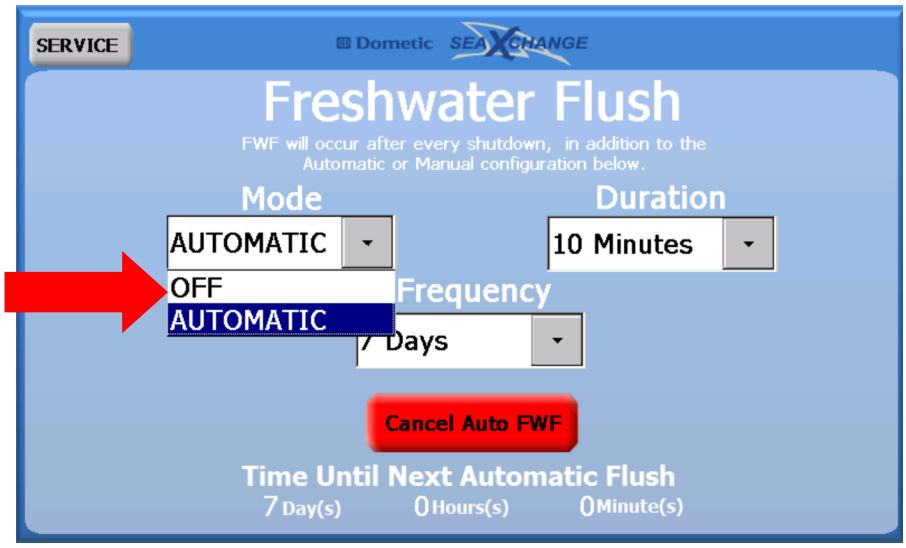

3. MANUAL FWF icon should appear. Press the button to initiate a FWF. You would need to reverse the steps in order to STOP the FWF.

MENU OPTIONS

1. Press the MENU button on the Home Screen

2. The MENU screen should appear.

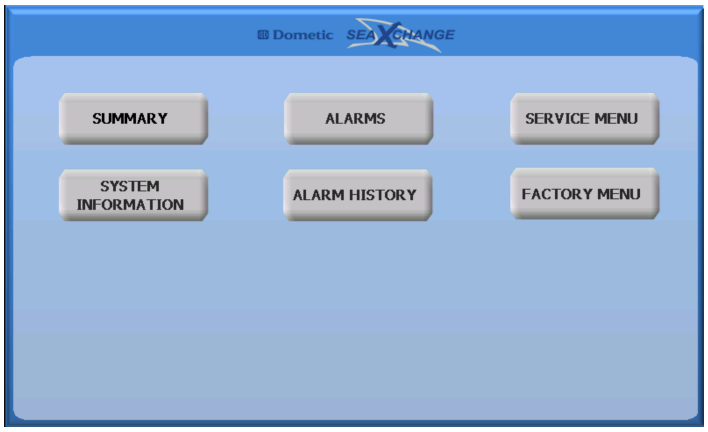

SUMMARY

Pressing the SUMMARY button will show the systems current values. Pressing the arrow on the bottom right hand side of the screen will scroll to the components of the system.

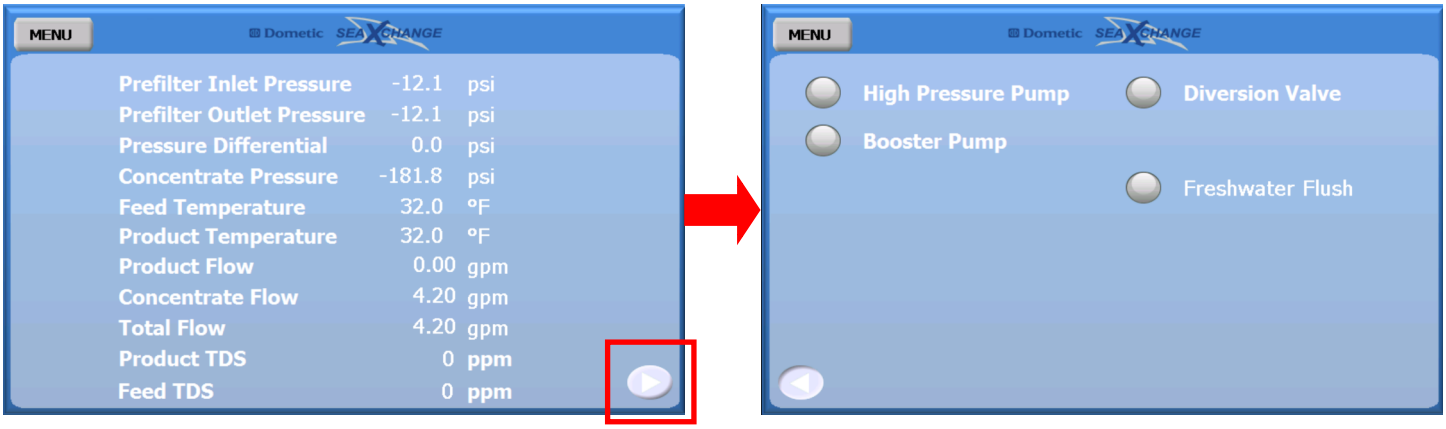

SYSTEM INFORMATION

Pressing the SYSTEM INFORMATION will bring up the systems specification

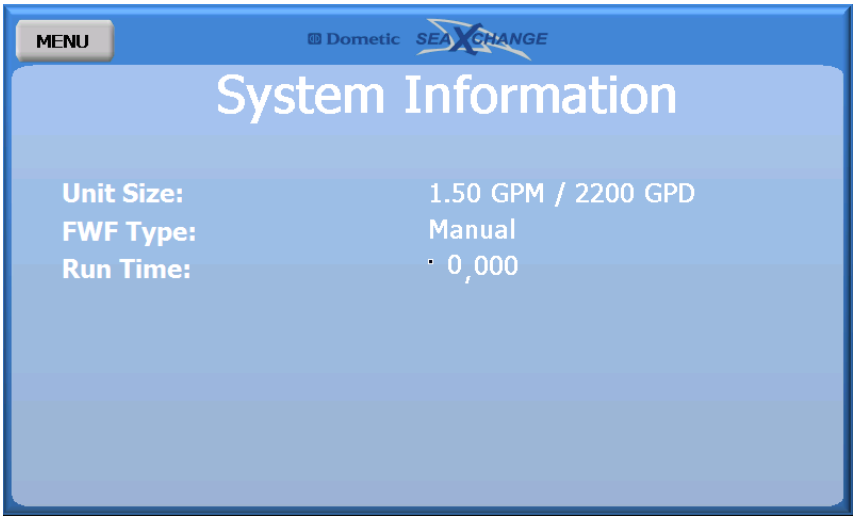

ALARMS

Pressing the ALARMS will show any active alarms present.

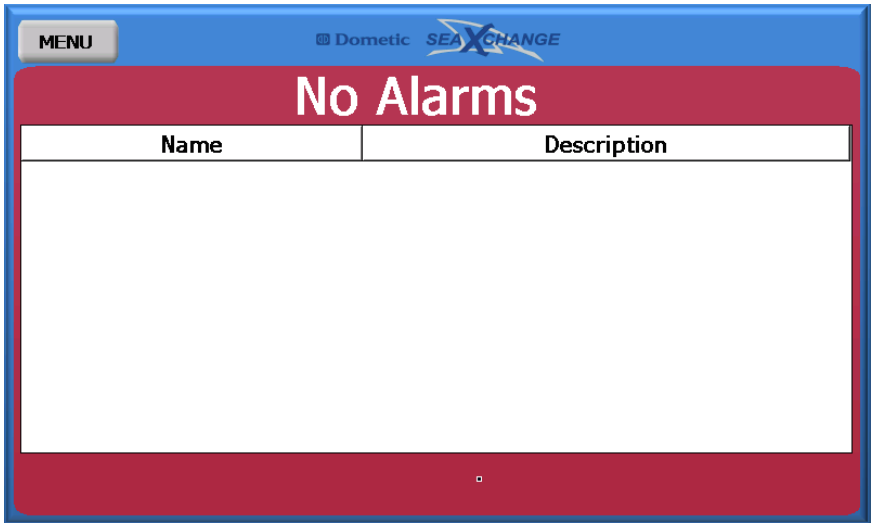

If any active alarms are present a flashing red bell will appear to the left of the Dometic Sea Xchange logo.

ALARM HISTORY

ALARM HISTORY will display any past and current alarms in the system. Pressing Back and Forward will scroll though the systems alarm history. The down arrow menu can also scroll through different time parameters. The USB icon can be selected to transfer history to a USB thumb drive.

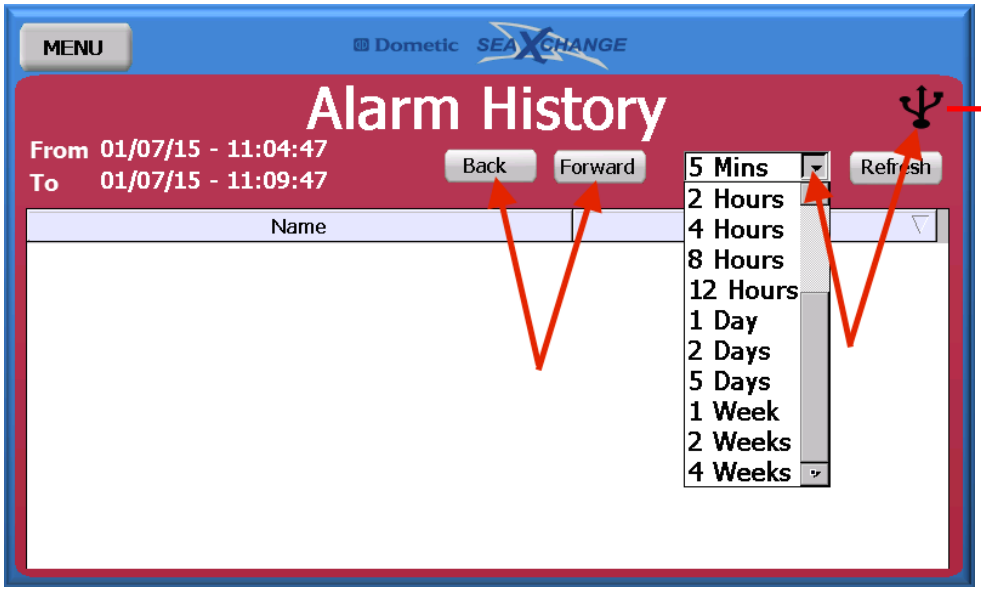

SERVICE MENU

The Service Menu gives you access to several option in the system. Some of this option can also be selected by pressing the images on the Home Screen as depicted on the MANUAL SYSTEM OPERATION.

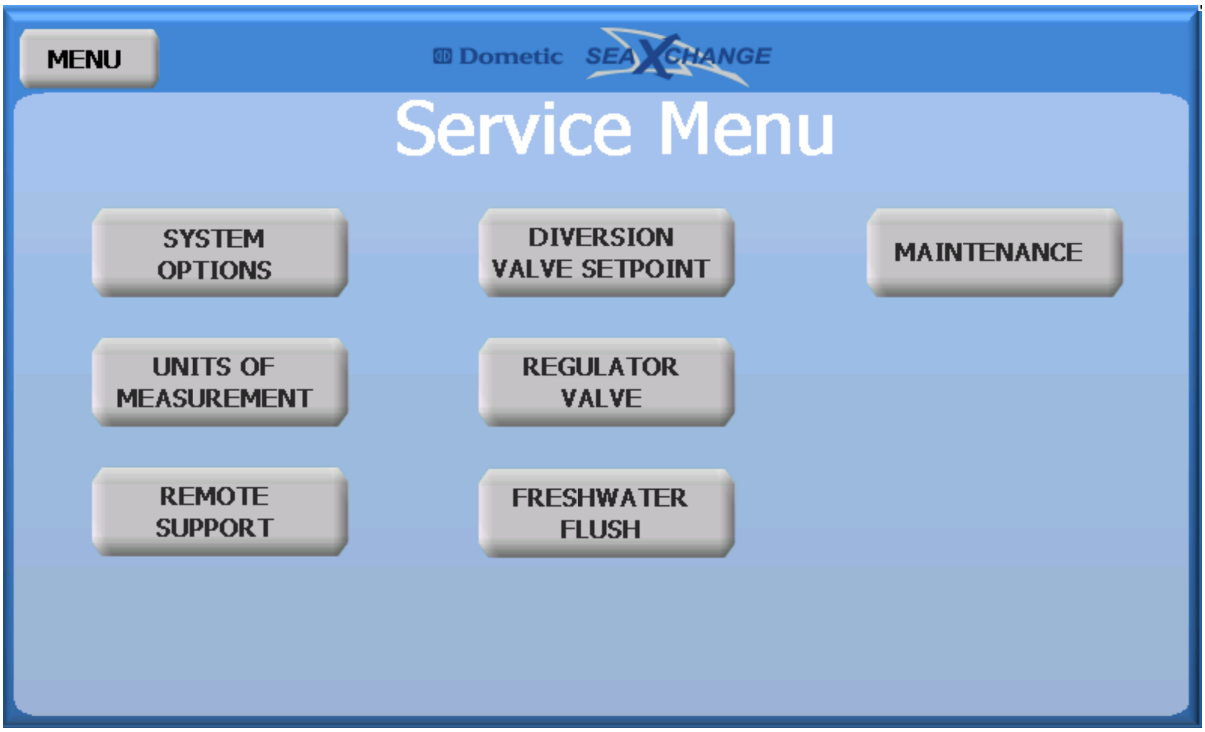

SYSTEM OPTIONS

System Options give you the ability to add or remove components to the system. Or turn OFF some

components when they are not being used.

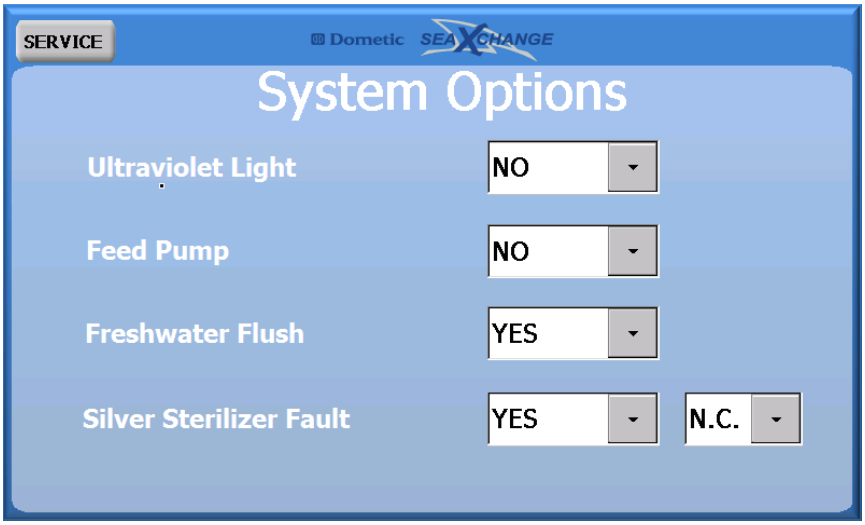

UNITS OF MEASUREMENT

The units of measurement on the system can be changed from within this menu. Simply press the measurement you want to display and press the Home Screen logo or the Service button to go back.

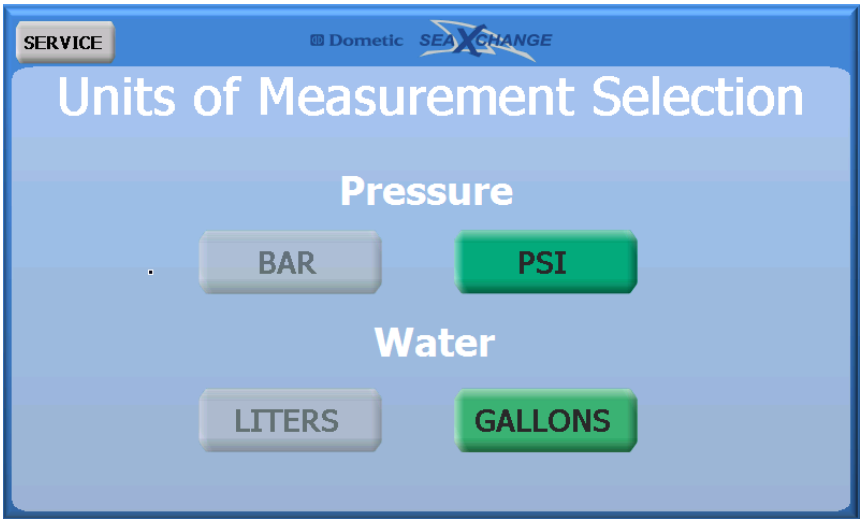

DIVERSION VALVE SETPOINT

This can also be accessed from the home screen by pressing the diversion valve image. The set point is factory set at 650 ppm. To change the set point there is a sliding scale, or press the box and type in the set point desired. Then press ok to change it, or cancel.

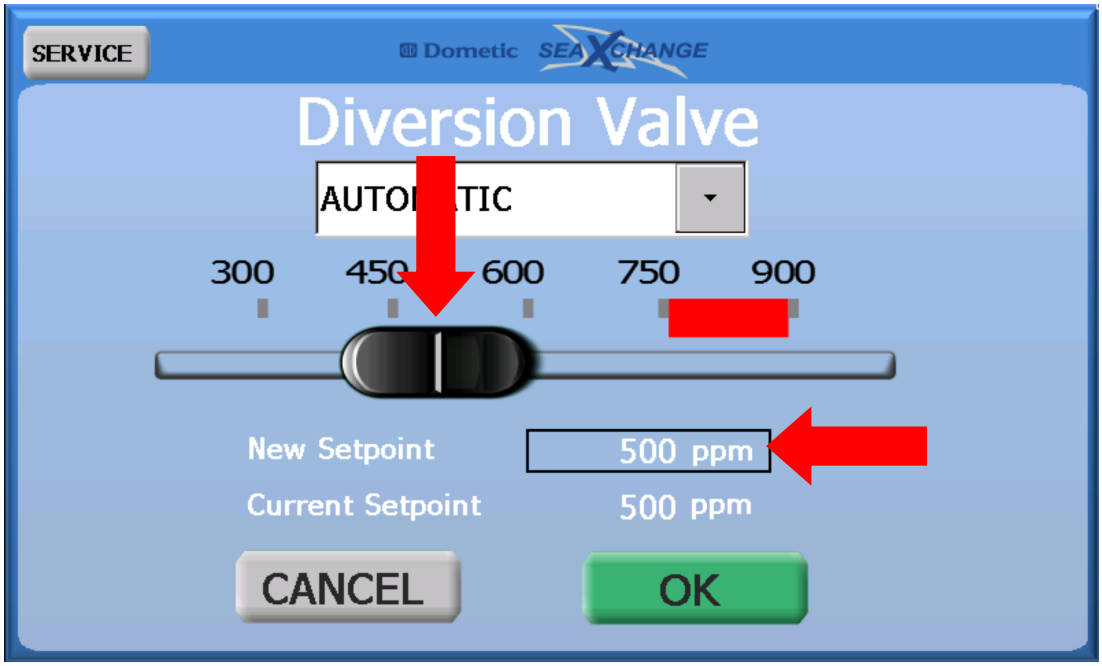

The diversion valve can be manually operated, by selecting the **MANUAL OVERRIDE** then pressing divert water button.

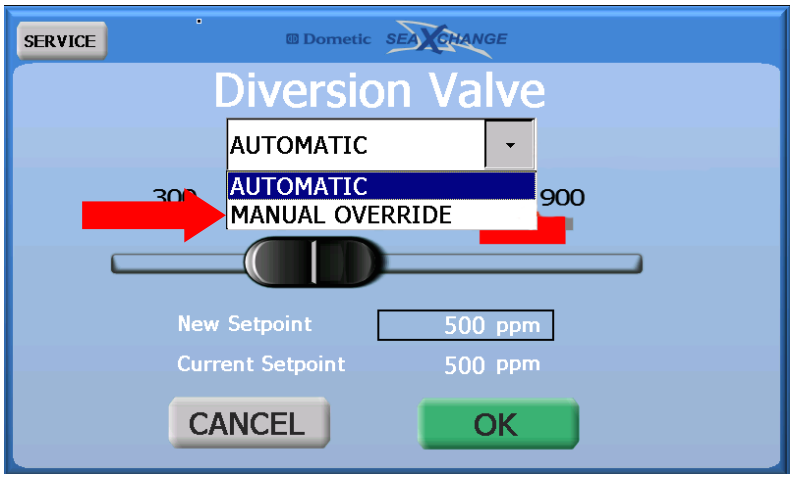

DIVERT WATER will send water to the ships fresh water tank

OPEN VALVE will send water overboard

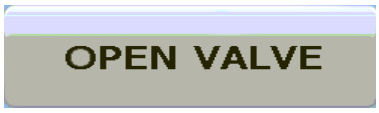

REGULATOR VALVE

This menu can also be accessed from the home screen by pressing the image of the regulator valve. The regulator valve is normally in the automatic selection. There are also two manual selections used for manual operation, and troubleshooting. The manual PLC selection allows the regulator valve to be open and closed by entering a percentage. The manual hand selection cuts the electronic functions of the regulator valve off so it may be turned by hand. *NOTE: After manual hand has been selected, the system will go into alarm when it is switched back to automatic. The alarm will have to be cleared to go back to normal operation.

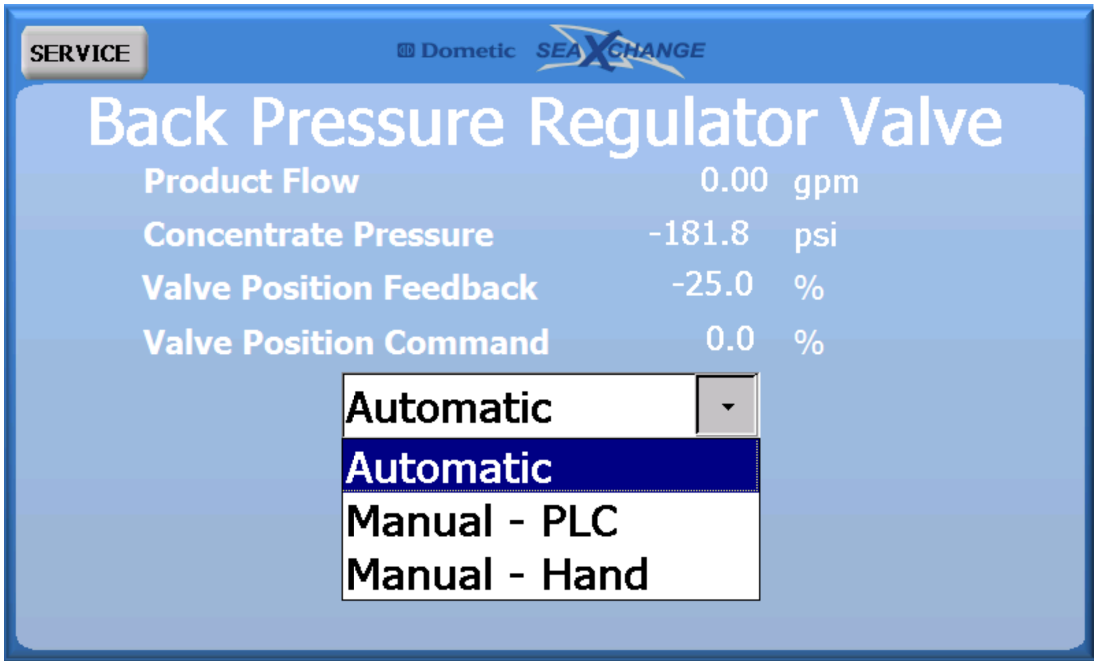

Manual-PLC will allow the user to move the valve by entering a percentage. Press the box to enter the numbers, then press enter. The valve will open or close according to the percentage entered. This will be displayed by the valve position command. The valve position feedback is the actual current position of the valve. The plus and minus buttons can be used to move the valve in smaller increments.

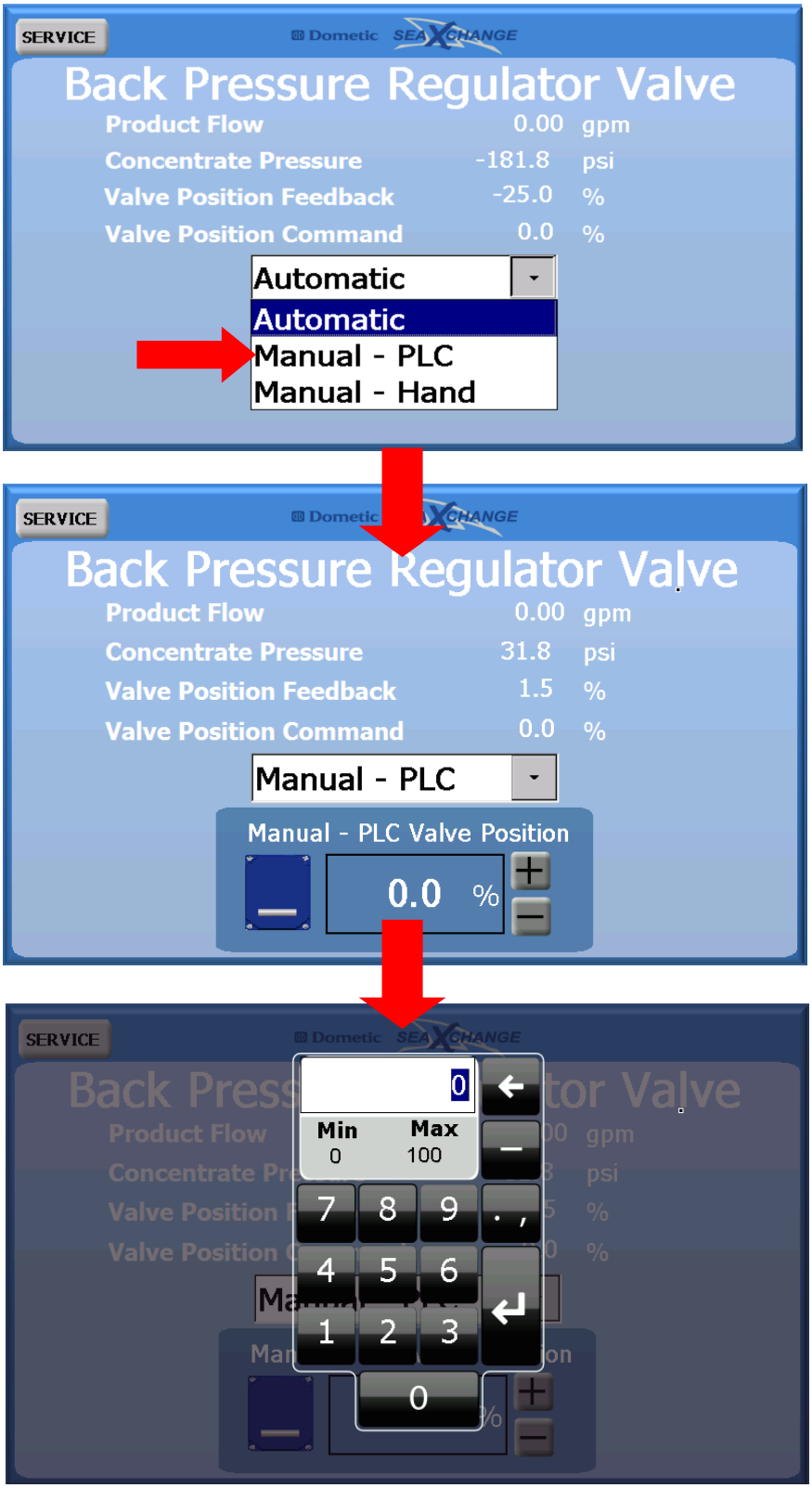

Manual-Hand will be displayed over the valve on the home screen.

*NOTE: After manual hand has been selected, the system will go into alarm when it is switched back to automatic. The alarm will have to be cleared to go back to normal operation.

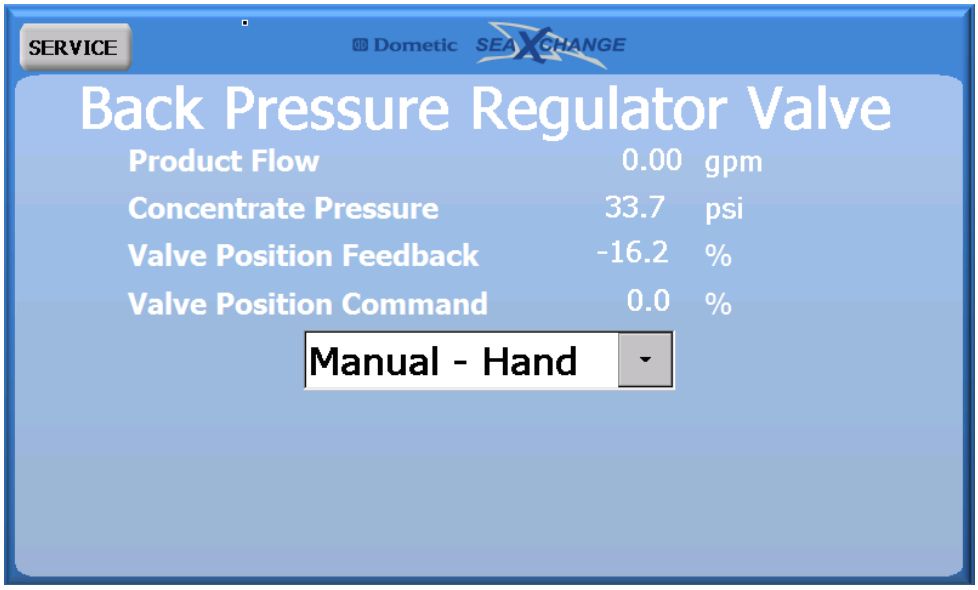

The following icon message will appear on the Home Screen:

Manually start turning the valve until you reach you rated product flow or you reach 850 PSI, which ever comes first.

FRESH WATER FLUSH

This screen is also accessible from the home screen by pressing the fresh water flush image. The mode, duration and frequency can be changed here. The fresh water flush can also be canceled. The time until the next flush is displayed and counted down at the bottom of this screen. A Manual flush can be done by selecting the mode and the duration preferred.

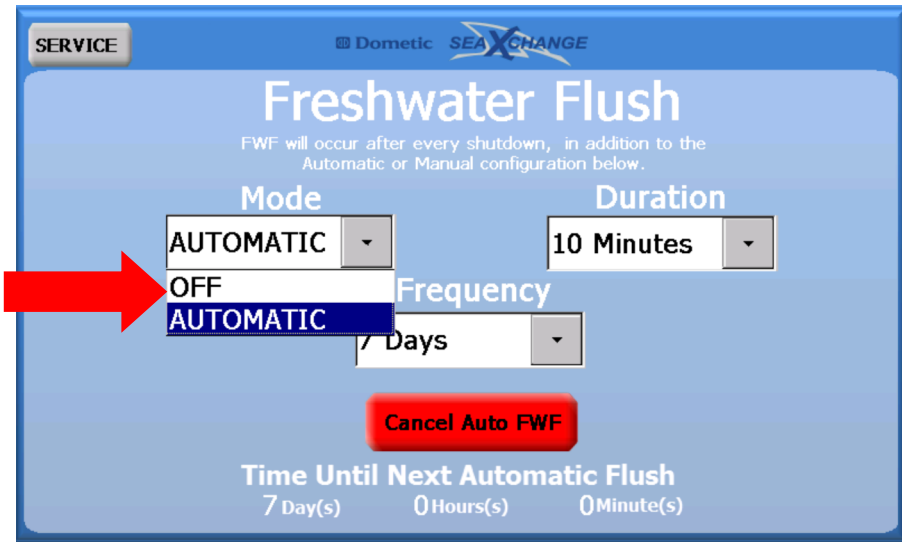

Selectin OFF Mode will make the MANUAL FWF icon appear. Press the button to initiate a FWF. You would need to reverse the steps in order to STOP the FWF.

The duration of the MANUAL FWF can also be adjusted with the Duration drop down arrow.

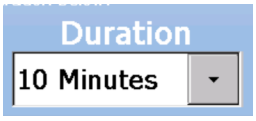

MAINTENANCE

This will show any maintenance that is necessary to preform at the time. If no maintenance is needed at this time this will be displayed.

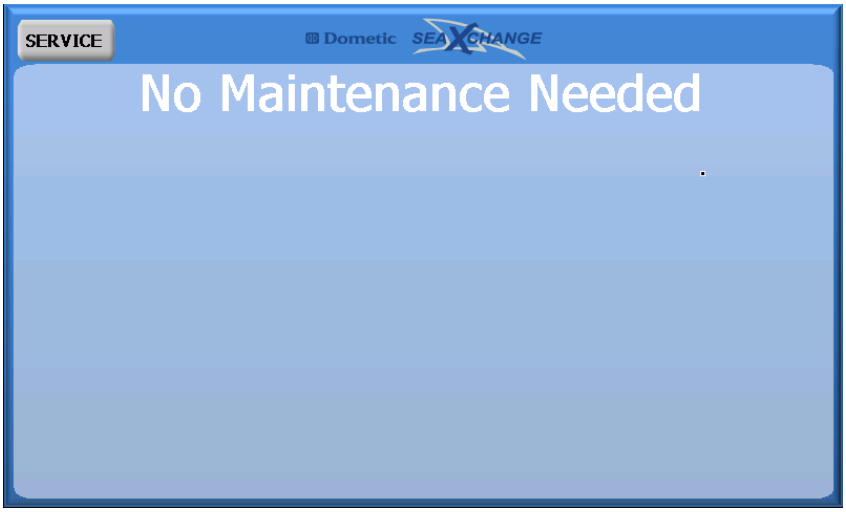

When maintenance is required a wrench and screwdriver symbol with appear at the top of the display. On the home screen this symbol can be pressed to bring up this screen. Preform the required maintenance then press reset.

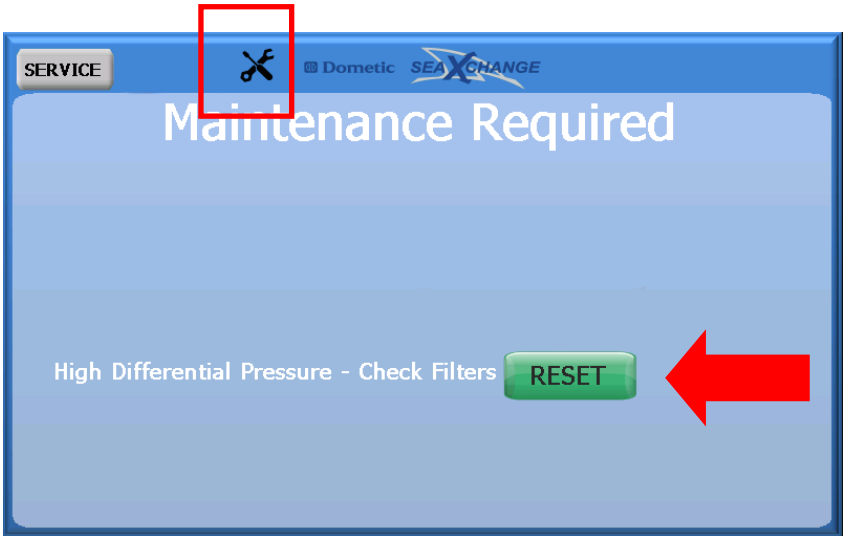

REMOTE SUPPORT

In this menu the pGD Touch IP address will be shown at the bottom of the screen if the system is wired to a router. This will be needed to connect to the VNC viewer app. This manual will be brought up if the launch manual button is pressed. The VNC viewer menu will pop up if the enable remote support is pressed. The web browser will pop up is the launch web browser is pressed. To enable remote support, see the VNC viewer procedure section of the manual.

Enable Remote Support

1. Press the green button next to Enable Remote Support

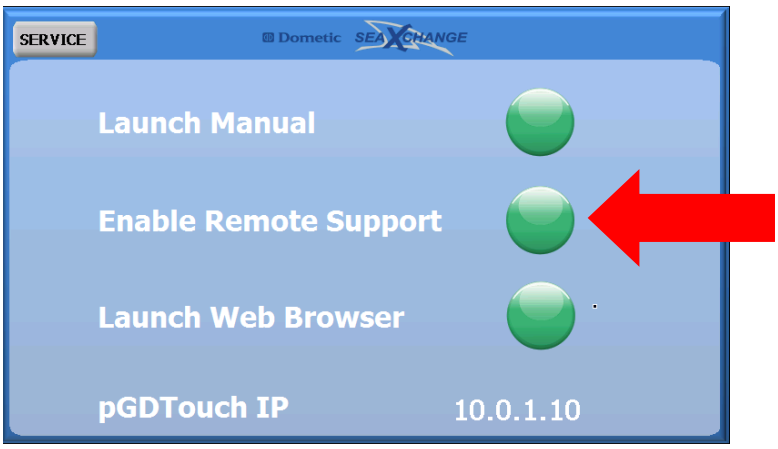

2. In the service menu, press the enable remote support button. Another menu will pop up. Press the start VNC server button, then press ok

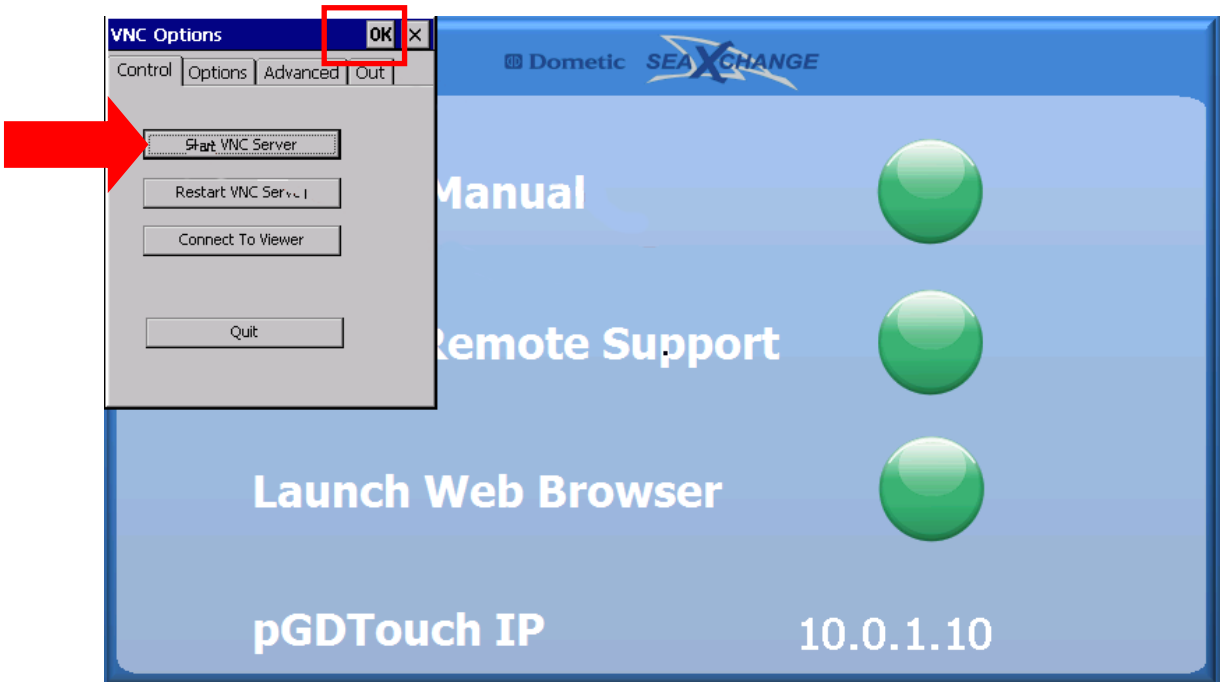

3. Download the Free VNC Viewer app from the app store.

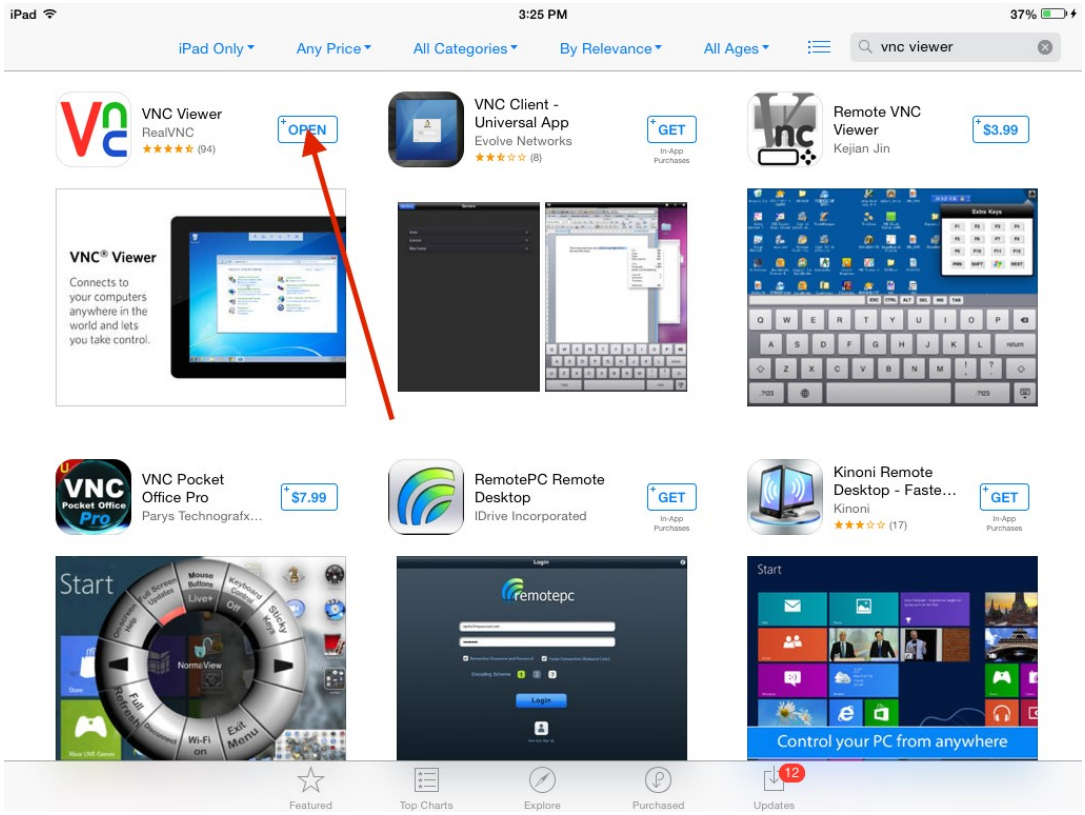

4. Search for the VNC Viewer Icon on you device and open it.

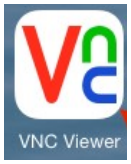

5. Press the plus sign in the upper right hand corner to set up new connection.

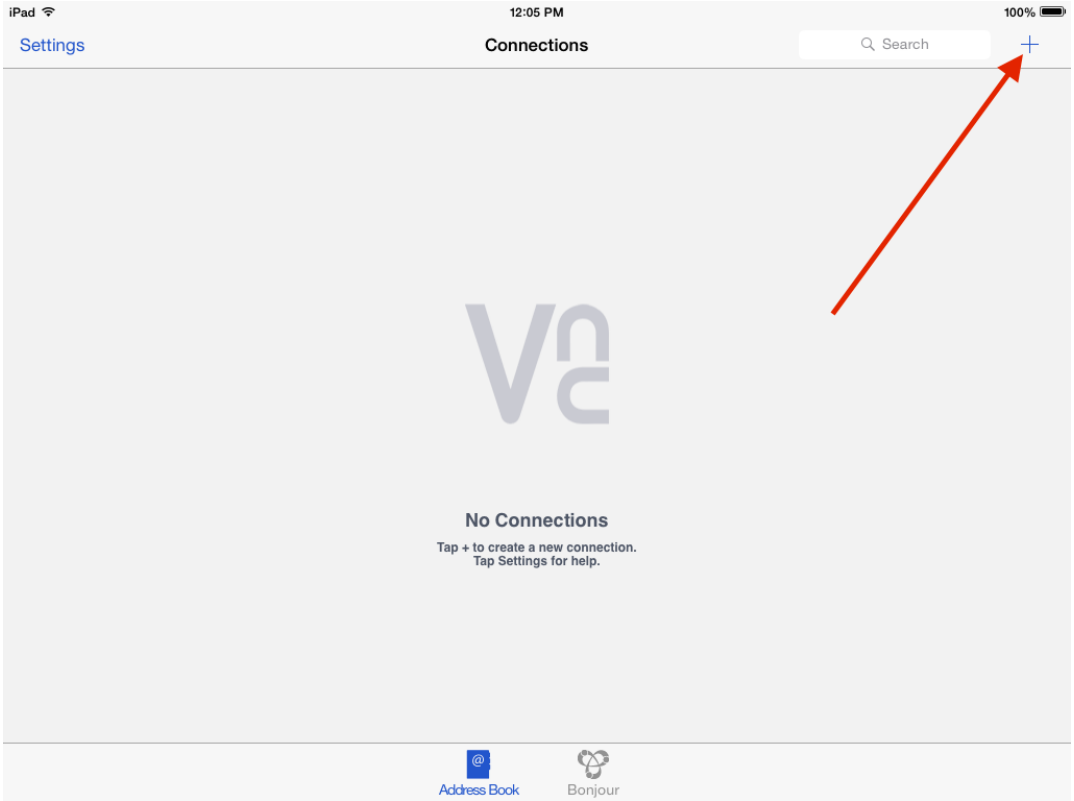

6. Type in the IP Address found in the unit's service menu, in the remote support menu at the bottom of the screen. Then give it a name.

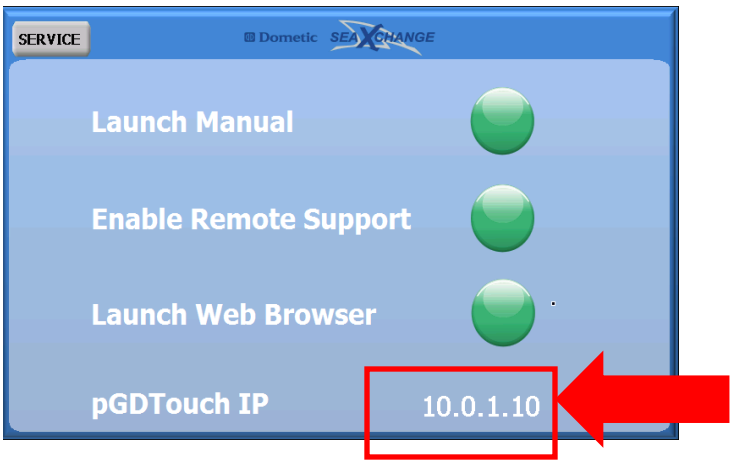

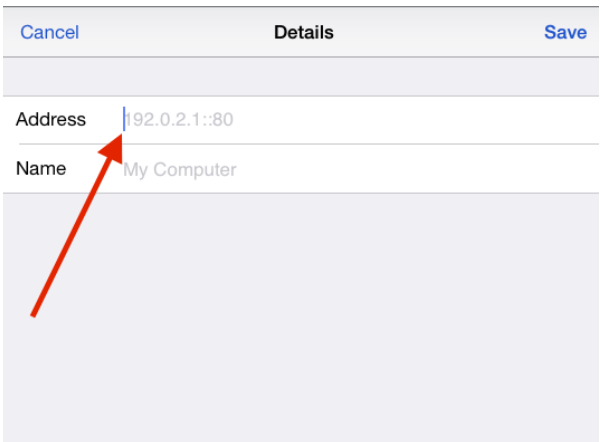

EXAMPLE

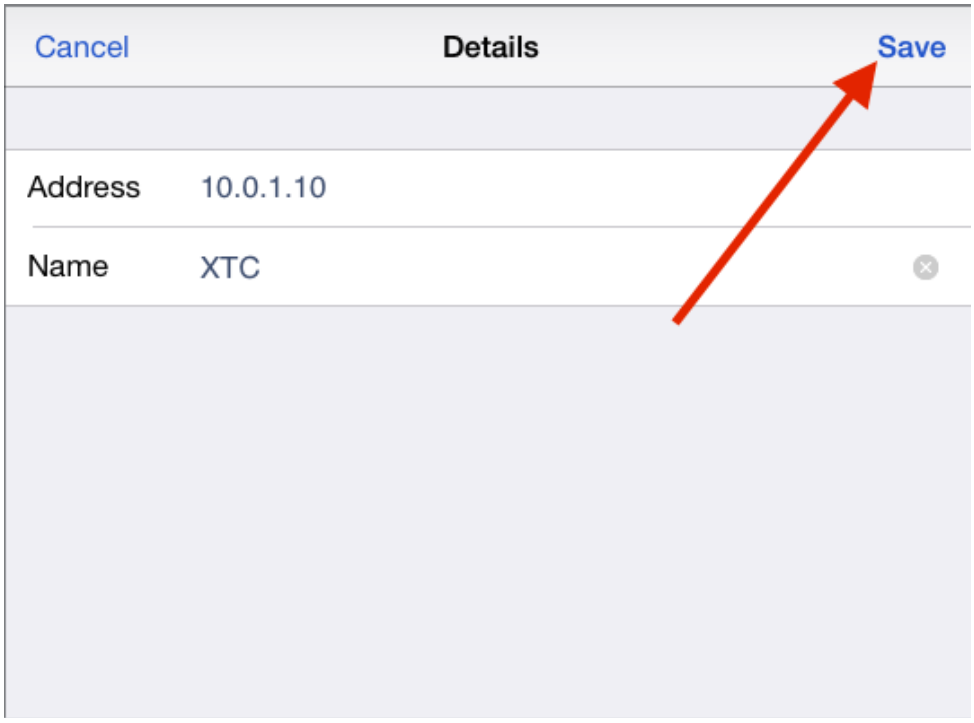

7. Next, press the “Connect” button

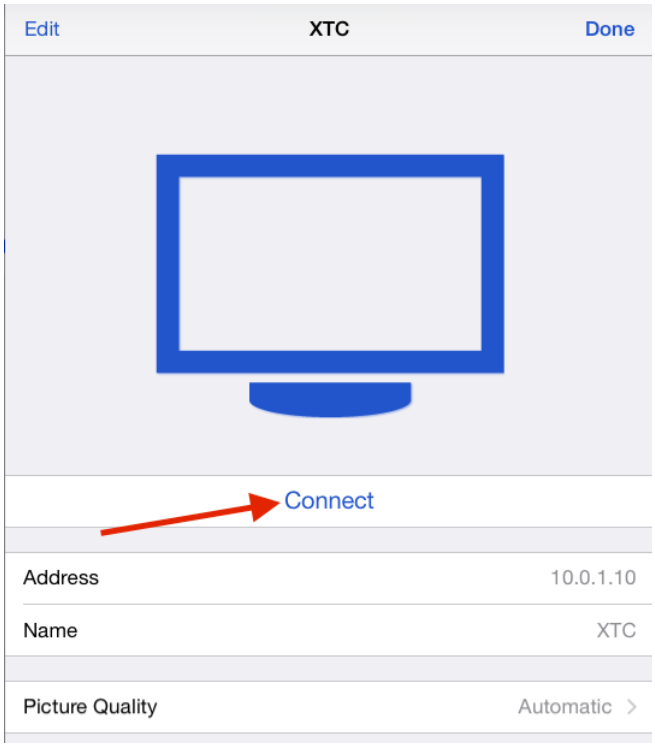

8. The following screen will pop up. Simply press the “Connect” option.

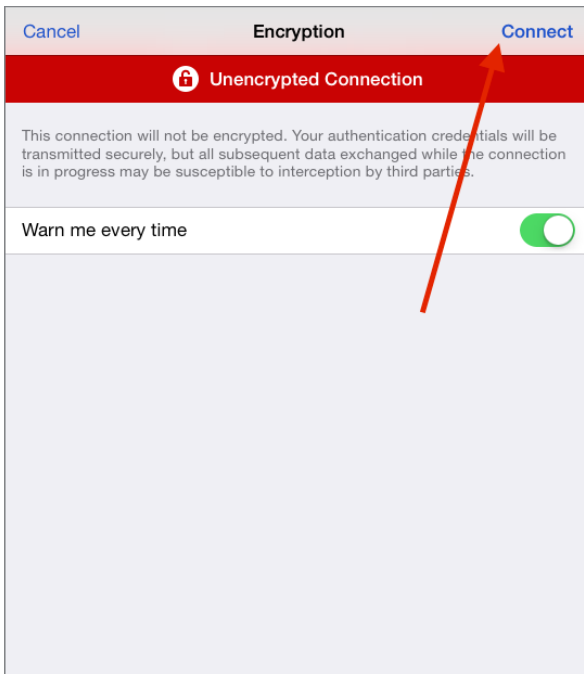

9. Finally it will show you the connecting screen. When it is done connecting you will see the same image on your display and your device

10. In order to browse and navigate the screen on you phone, a small dot will appear. This is a cursor that allows you to select icons and menus. Move the cursor with your finger to an icon you want to press and tap the screen to select it.

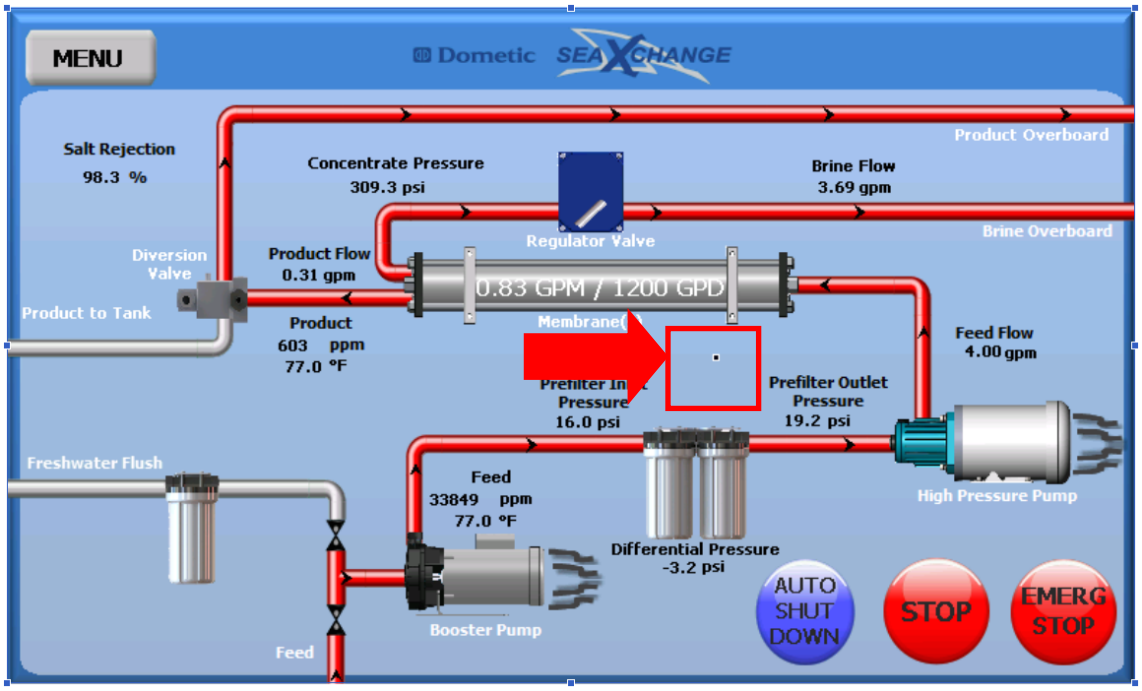

10. If there is a problem connecting, the enable remote support button can be pressed. Another menu will pop up. Select the start VNC server button, and press ok. Try to connect again.

REMOTE TOUCH SCREEN SETUP

1. Run a 4 conductor cable piggy backed on the power terminal and communication terminal on the display on the unit to the same terminals on the remote display .

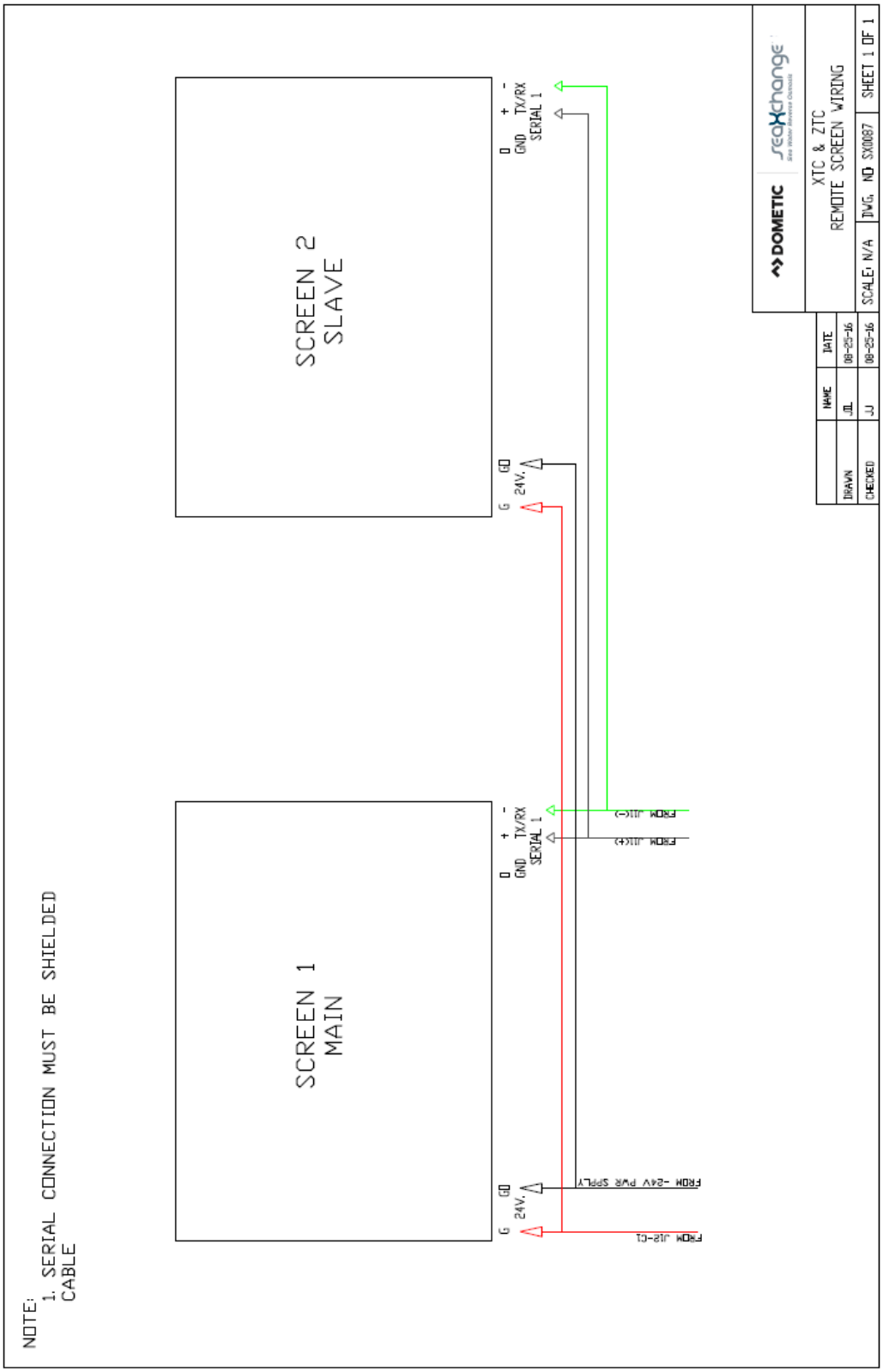

2. Press and hold the screen in a spot that does not bring you to another screen. A hidden menu will pop up. Press the Show System Settings selection.

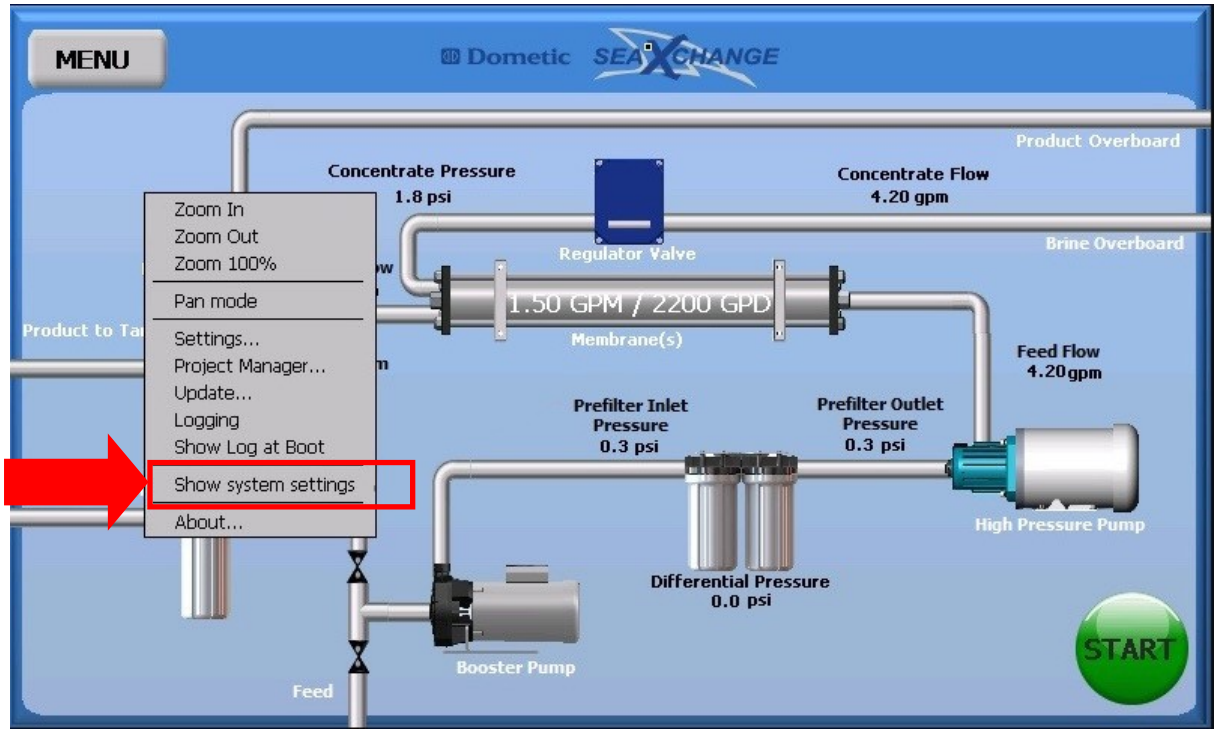

3. Press the “Next” button until Set Device Address is highlighted. Then press “Set Device Address”.

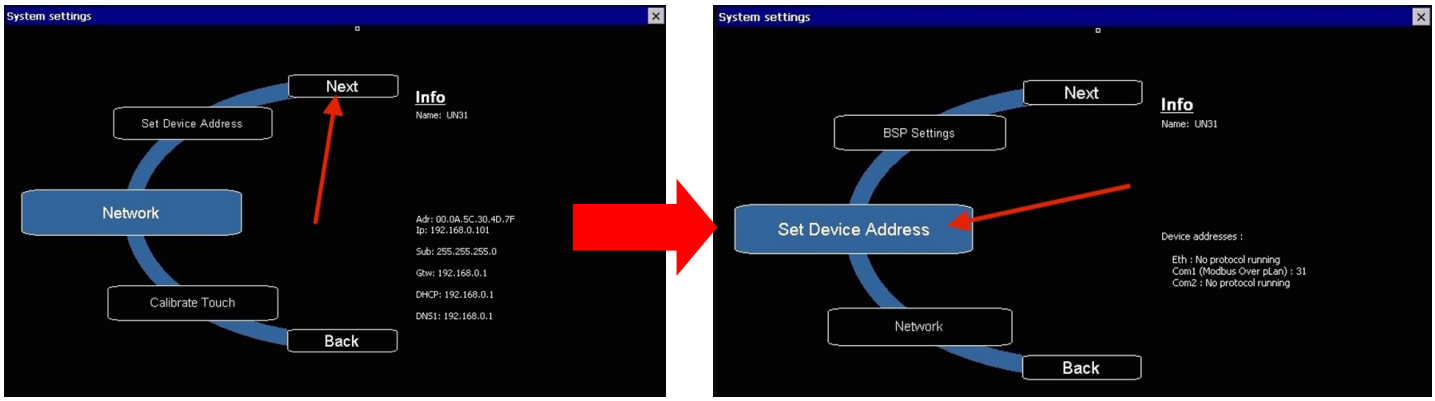

4. Press the Port selection button to select “COM 1”. You will see it set for address 31. Press the box that has the 31 in it and change it to 30.

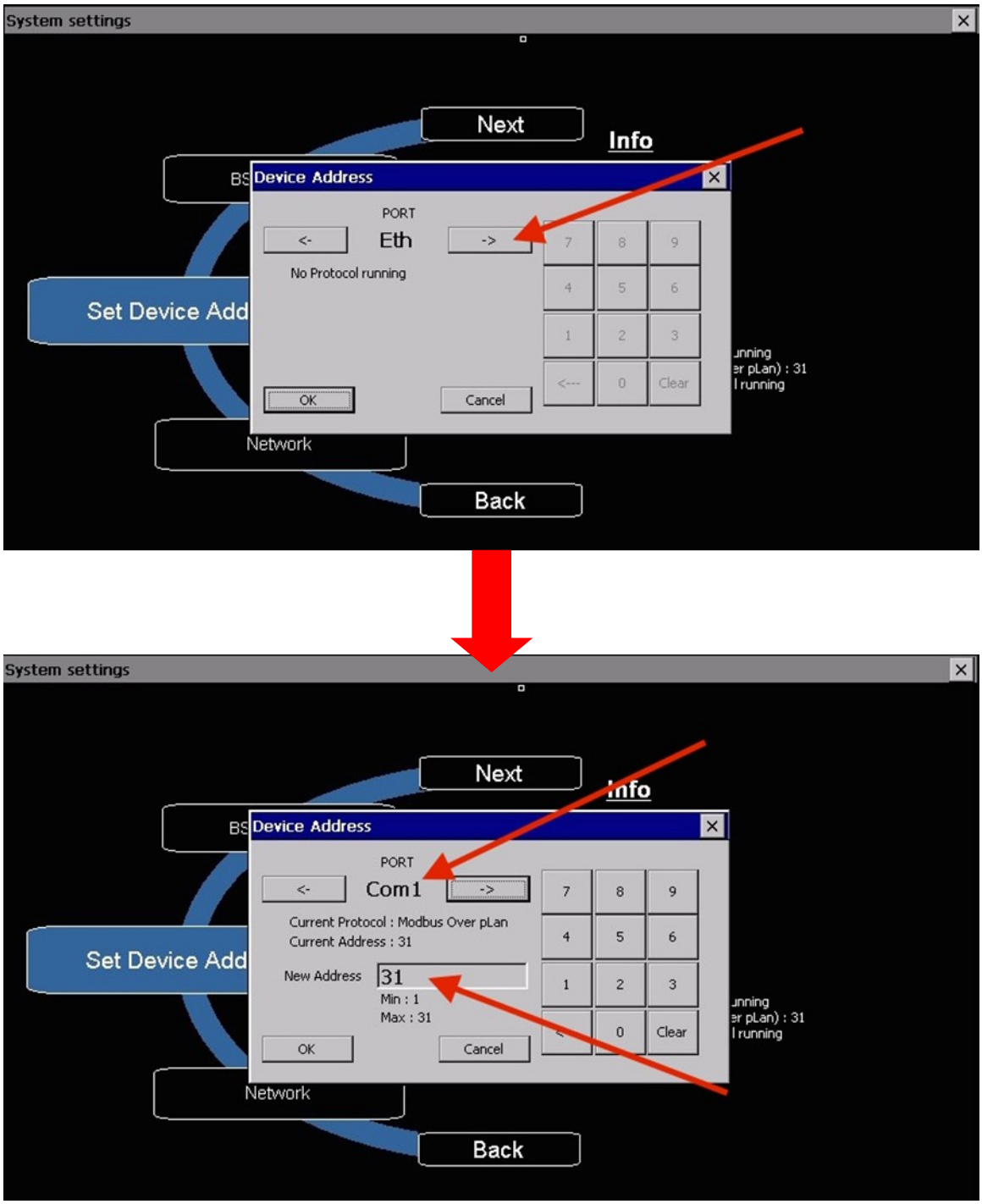

5. Press “ok”. You will then be instructed to cycle the power of the unit for the changes to take effect. Press “ok”, then “x” out of the screen and cycle the power to the machine. Now the display should be functioning correctly.

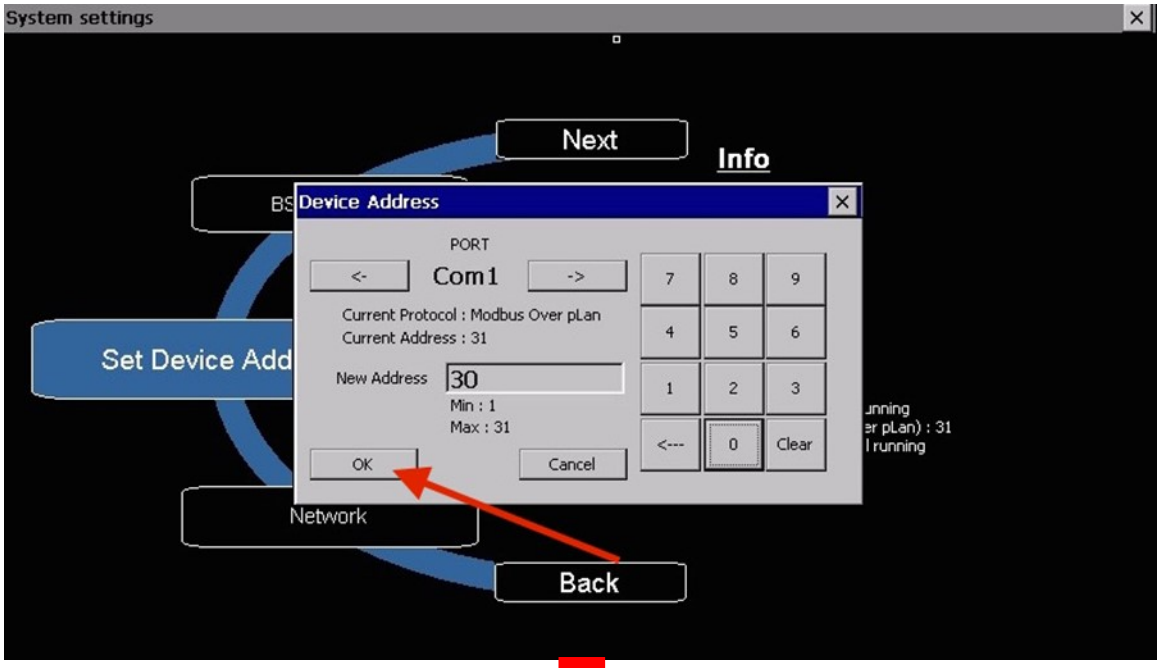

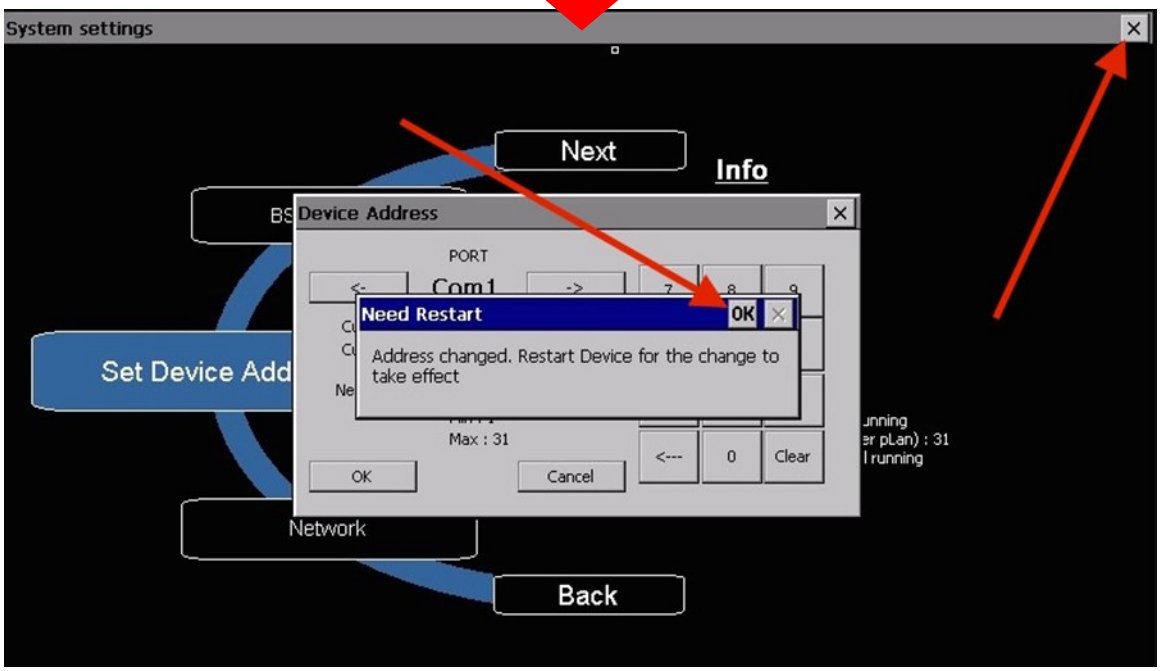

6. XTC SYSTEM SCHEMATICS

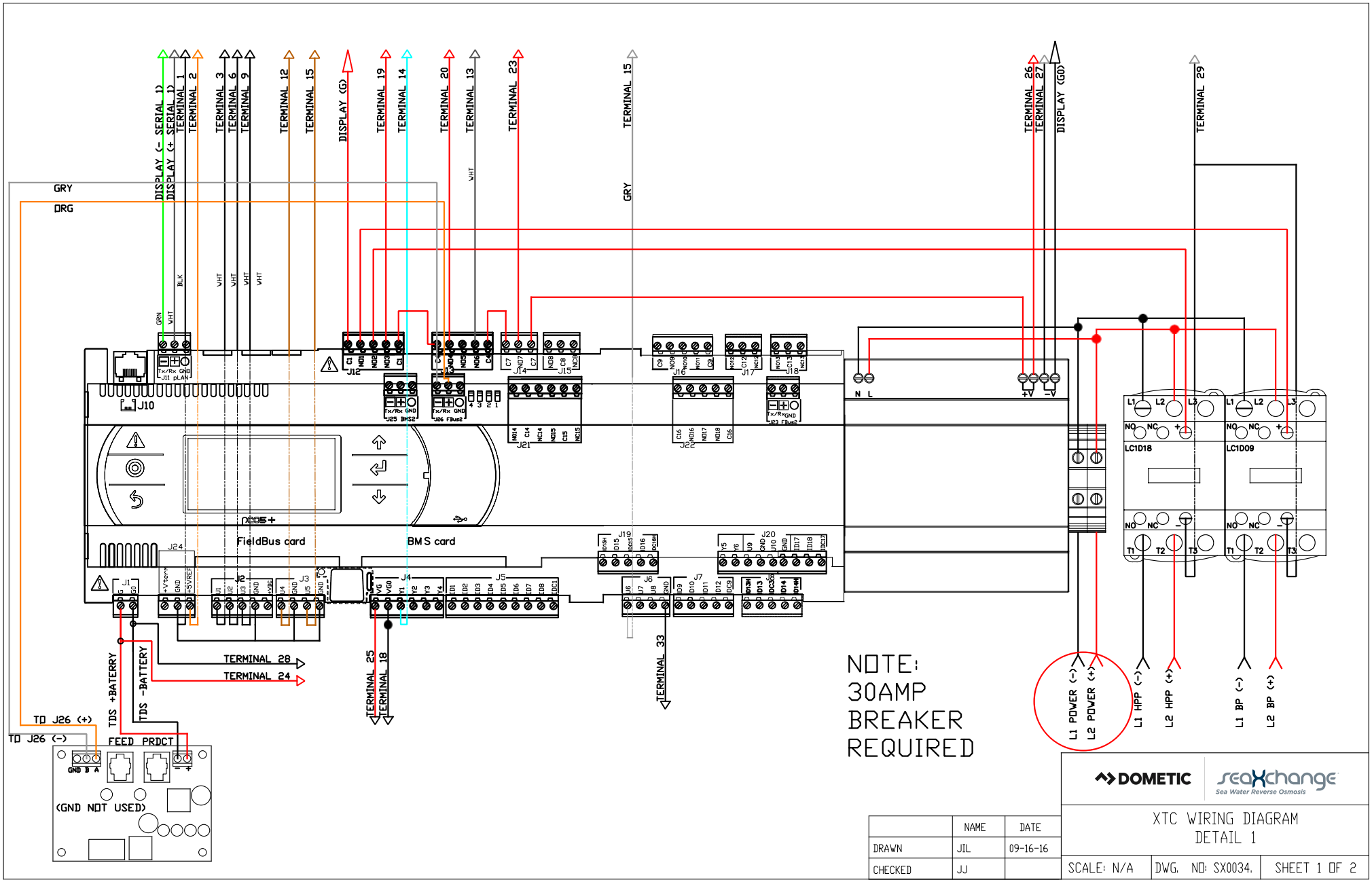
DISPLAY (- SERIAL 1)
DISPLAY (+ SERIAL 1)
TERMINAL 1
TERMINAL 2
TERMINAL 3
TERMINAL 6
TERMINAL 9
TERMINAL 12
TERMINAL 15
DISPLAY (G)
TERMINAL 19
TERMINAL 14
TERMINAL 20
TERMINAL 13
TERMINAL 23
TERMINAL 15
TERMINAL 26
TERMINAL 27
DISPLAY (G0)
TERMINAL 29
GRY
ORG
GRN
WHT
BLK
J10
J11 pLAN
J12
J13
J14
J15
J16
J17
J18
J21
J22
J23 FBus2
J24
J25 BMS2
J26 FBus2
FieldBus card
BMS card
J1
J2
J3
J4
J5
J6
J7
J20
TERMINAL 28
TERMINAL 24
TERMINAL 25
TERMINAL 18
TERMINAL 33
TDS +BATERRY
TDS -BATTERY
TD J26 (+)
TD J26 (-)
FEED PRDCT
GND B A
(GND NOT USED)
N L
+V -V
LC1D18
LC1D09
L1 L2 L3
NO NC
T1 T2 T3
L1 POWER (-)
L2 POWER (+)
L1 HPP (-)
L2 HPP (+)
L1 BP (-)
L2 BP (+)
NOTE:
30AMP
BREAKER
REQUIRED
DOMETIC
seaXchange
Sea Water Reverse Osmosis
XTC WIRING DIAGRAM
DETAIL 1
NAME
DATE
DRAWN
JIL
09-16-16
CHECKED
JJ
SCALE: N/A
DWG. NO: SX0034.
SHEET 1 OF 2

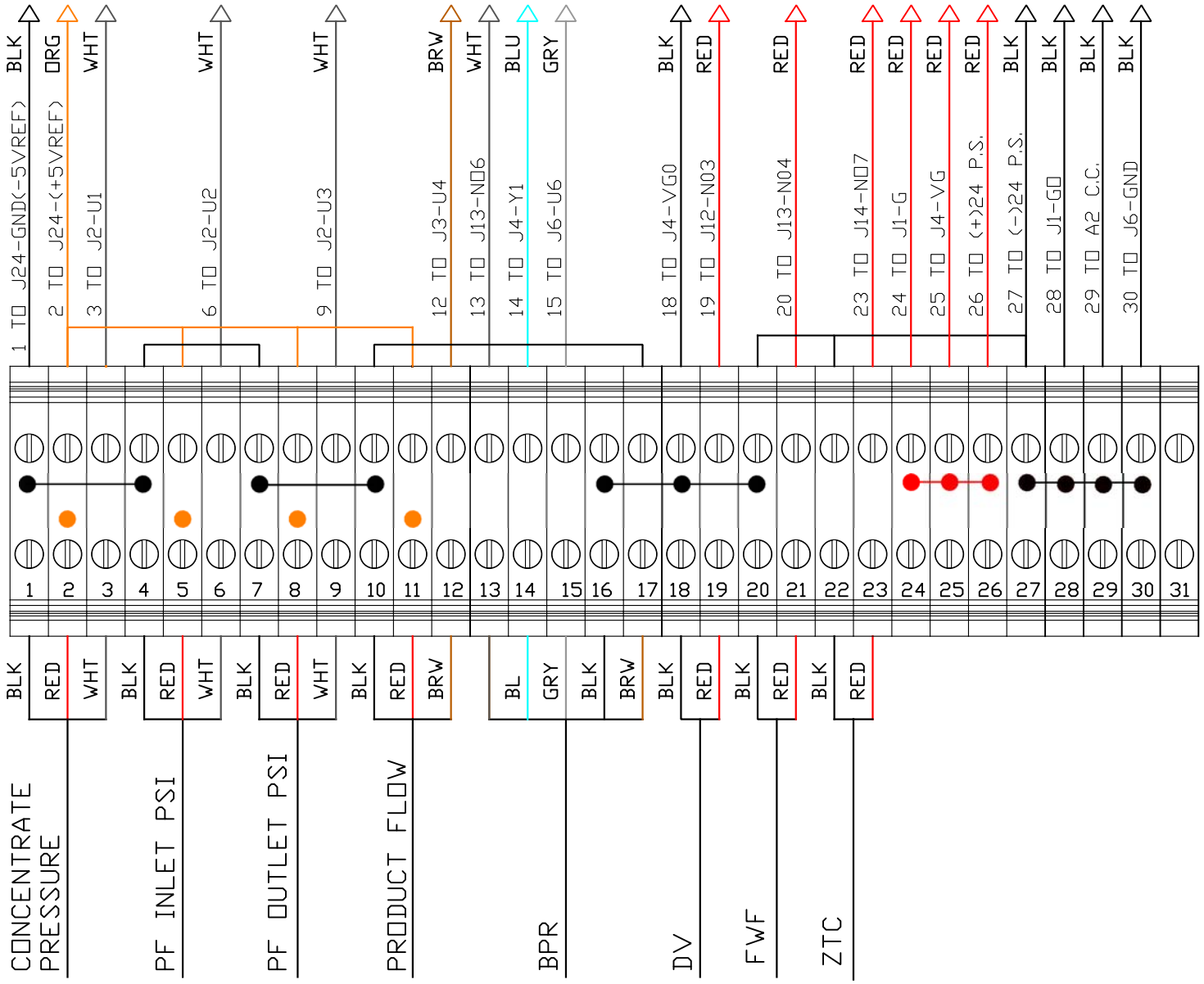

88

PROPRIETARY AND CONFIDENTIAL
THE INFORMATION CONTAINED IN THIS DRAWING IS THE SOLE PROPERTY OF SPOT ZERO. ANY REPRODUCTION IN PART OR AS A WHOLE WITHOUT THE WRITTEN PERMISSION OF SPOT ZERO IS PROHIBITED.

	NAME	DATE
DRAWN	JIL	03-16-17
CHECKED	JJ	

DOMETIC

seaXchange Sea Water Reverse Osmosis

XTC WIRING DIAGRAM
DETAIL 2

SCALE: N/A | DWG. NO: SX0034. | SHEET 2 OF 2

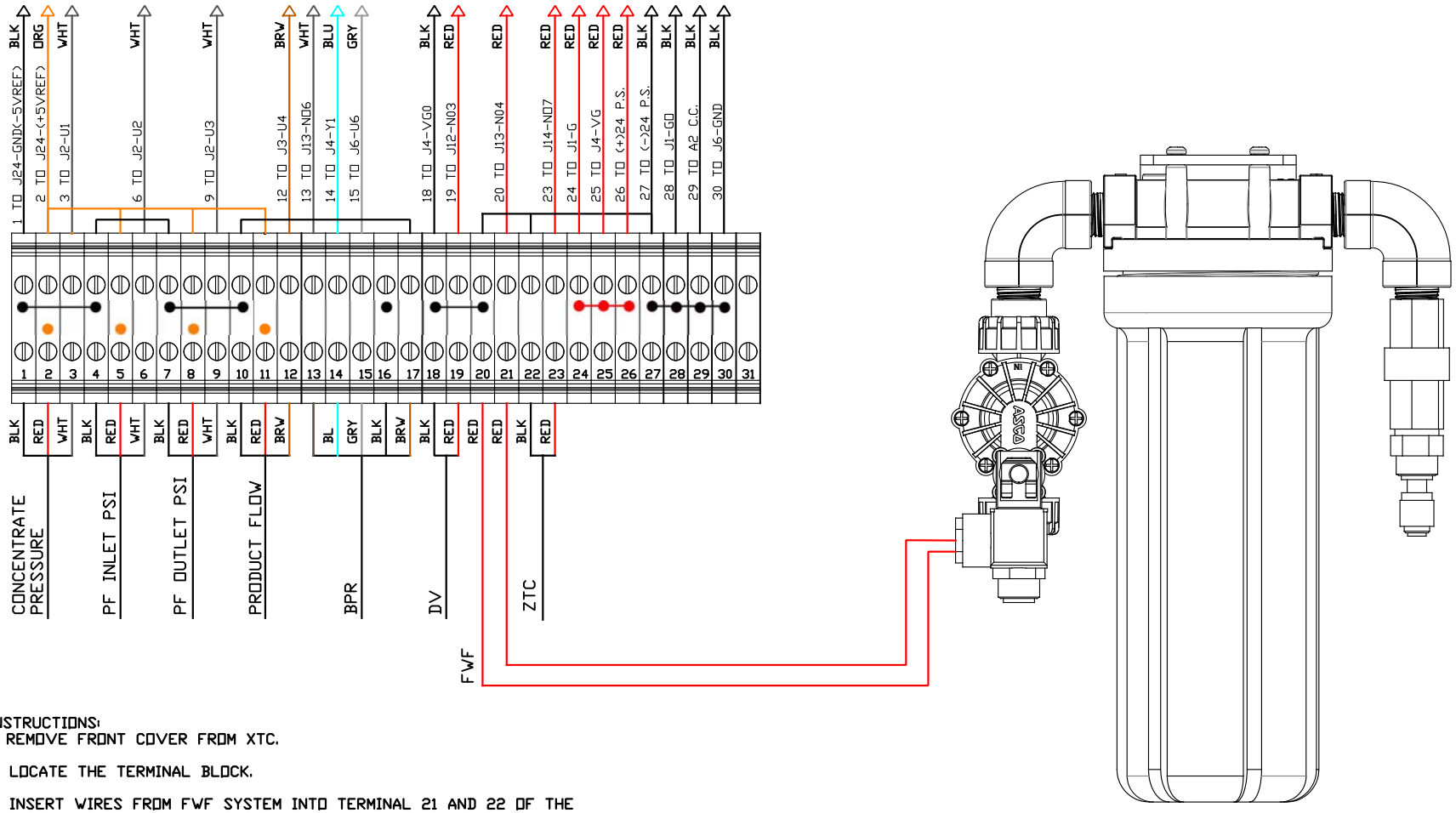

INSTRUCTIONS:

1. REMOVE FRONT COVER FROM XTC.

2. LOCATE THE TERMINAL BLOCK.

3. INSERT WIRES FROM FWF SYSTEM INTO TERMINAL 21 AND 22 OF THE TERMINAL BLOCK.

4. TIGHTEN THE BOLTS OF THE BLOCK TO SECURE THE WIRES IN PLACE.

5. SYSTEM SHOULD NOW FLUSH FRESH WATER AUTOMATICALLY AFTER EVERY USE.

PROPRIETARY AND CONFIDENTIAL
THE INFORMATION CONTAINED IN THIS DRAWING IS THE SOLE PROPERTY OF SPOT ZERO. ANY REPRODUCTION IN PART OR AS A WHOLE WITHOUT THE WRITTEN PERMISSION OF SPOT ZERO IS PROHIBITED.

UNLESS OTHERWISE SPECIFIED:

DIMENSIONS ARE IN INCHES
TOLERANCES: ±.015
FRACTIONAL ±1/32
ANGULAR: MACH ±1/2 BEND ±1
TWO PLACE DECIMAL ±.010
THREE PLACE DECIMAL ±.005

	NAME	DATE
DRAWN	JIL	02-20-17
CHECKED		
ENG APPR.		
MFG APPR.		
Q.A.		

DOMETIC

seaXchange Sea Water Reverse Osmosis

XTC
FWF WIRING SCHEMATIC

SCALE: N/A | DWG. #:SX0133 | SHEET 1 OF 1

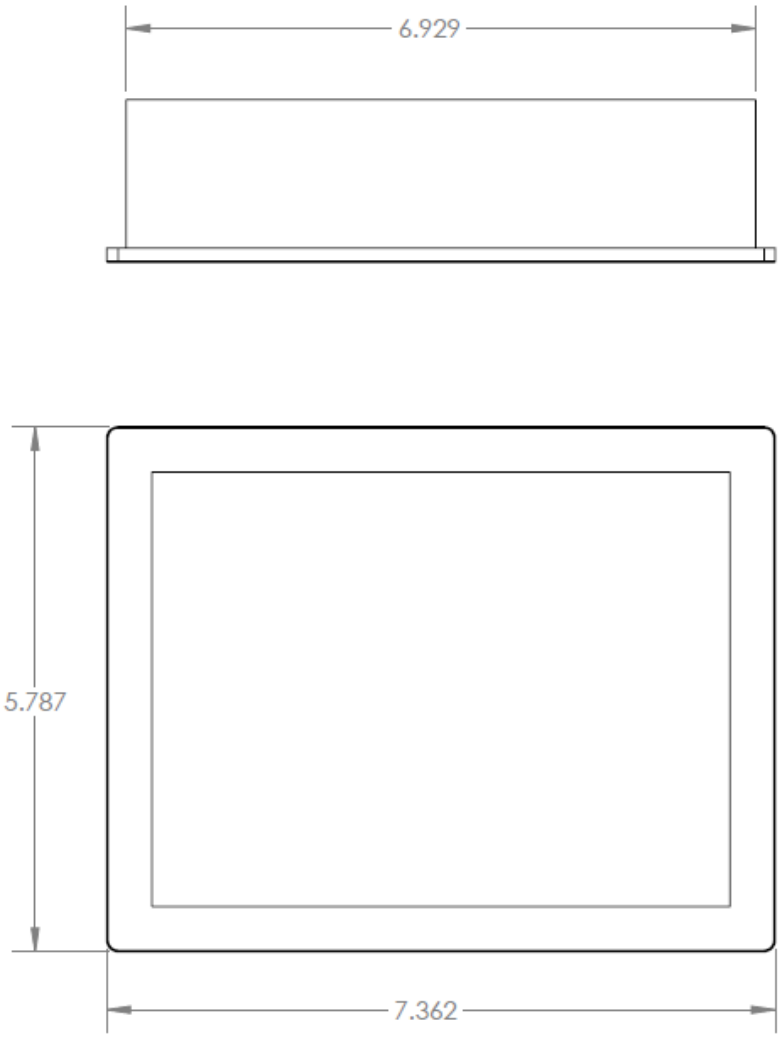

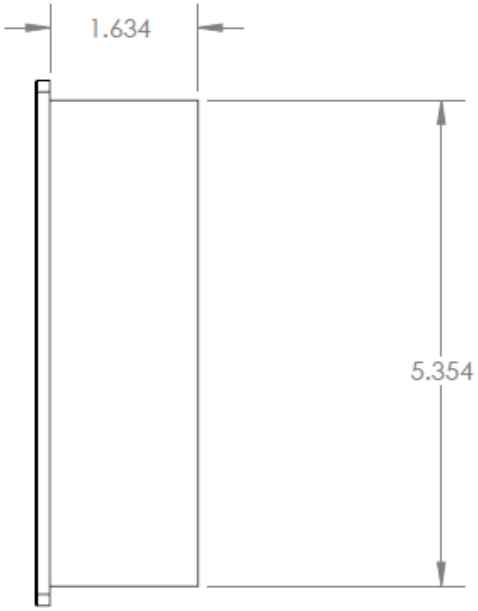

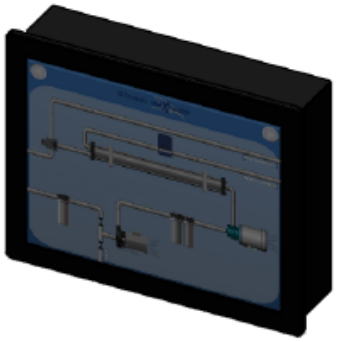

		NAME	DATE
	DRAWN	JIL	12-14-15
UNLESS OTHERWISE SPECIFIED:	CHECKED		
DIMENSIONS ARE IN INCHES TOLERANCES: ±.015 FRACTIONAL ±1/32 ANGULAR: MACH ±1/2 BEND ±1 TWO PLACE DECIMAL ±.010 THREE PLACE DECIMAL ±.005	ENG APPR.		
	MFG APPR.		
	Q.A.		

DOMETIC

seaXchange
Sea Water Reverse Osmosis

SEA XCHANGE
TOUCH SCREEN CONTROL

SCALE: 1:2 | DWG. #: SX0071 | SHEET 1 OF 1

PROPRIETARY AND CONFIDENTIAL
THE INFORMATION CONTAINED IN THIS DRAWING IS THE SOLE PROPERTY OF SPOT ZERO. ANY REPRODUCTION IN PART OR AS A WHOLE WITHOUT THE WRITTEN PERMISSION OF SPOT ZERO IS PROHIBITED.

7. XTC SYSTEM SPECIFICATIONS & PARTS

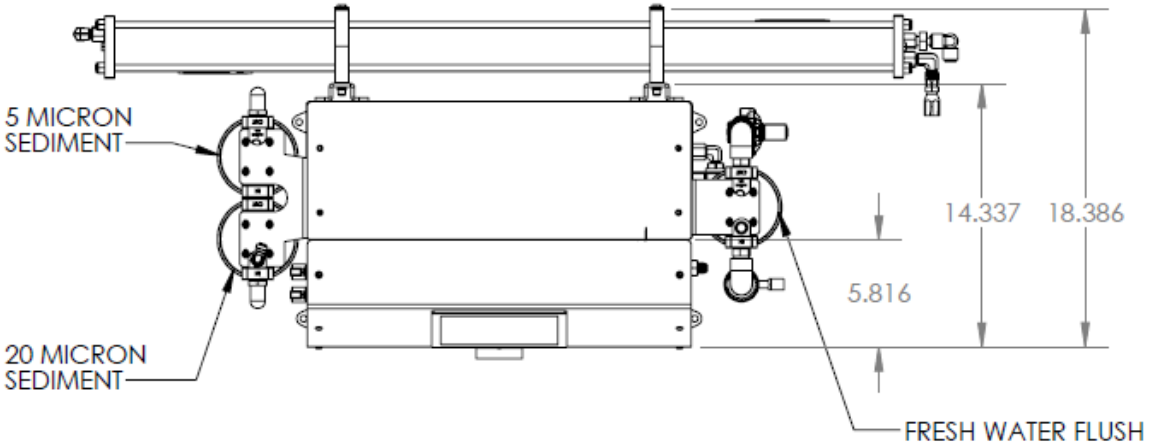

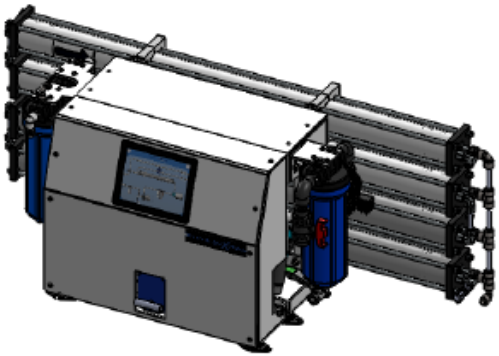

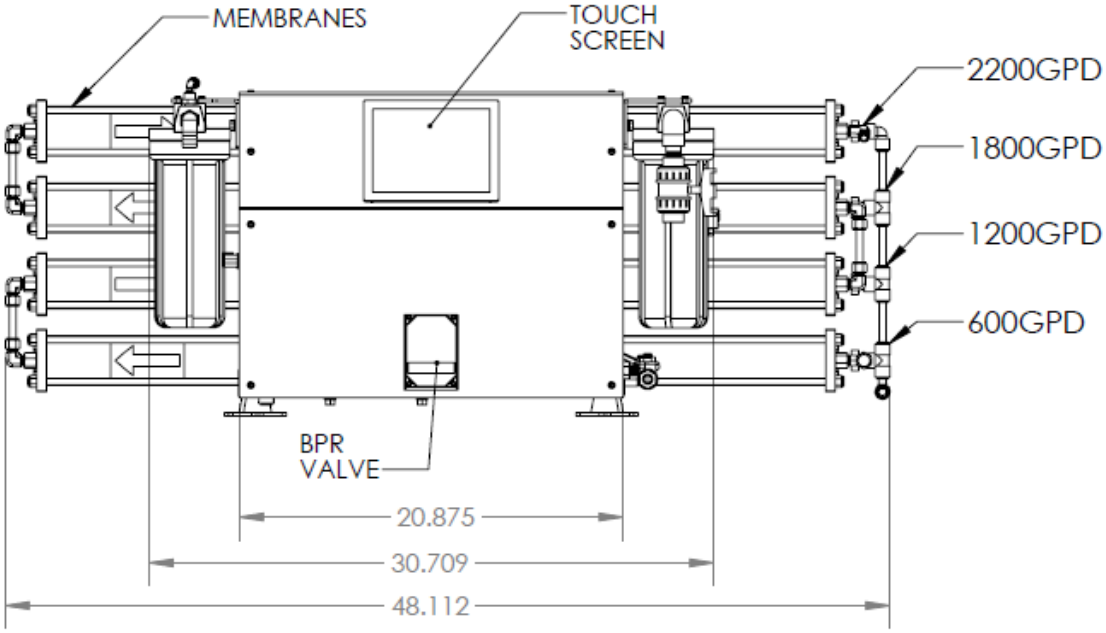

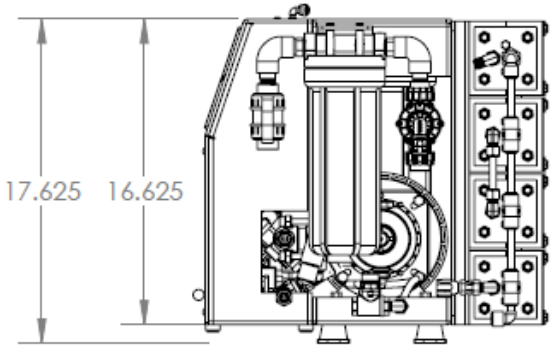

MODEL	WEIGHT (LBS)
XTC 600	114
XTC 1200	158
XTC 1800	169
XTC 2200	180

PROPRIETARY AND CONFIDENTIAL
THE INFORMATION CONTAINED IN THIS DRAWING IS THE SOLE PROPERTY OF SPOT ZERO. ANY REPRODUCTION IN PART OR AS A WHOLE WITHOUT THE WRITTEN PERMISSION OF SPOT ZERO IS PROHIBITED.

UNLESS OTHERWISE SPECIFIED:
DIMENSIONS ARE IN INCHES
TOLERANCES: ±.015
FRACTIONAL ±1/32
ANGULAR: MACH ±1/2 BEND ±1
TWO PLACE DECIMAL ±.010
THREE PLACE DECIMAL ±.005

	NAME	DATE
DRAWN	JIL	02-04-15
CHECKED		
ENG APPR.		
MFG APPR.		
Q.A.		

DOMETIC
seaXchange Sea Water Reverse Osmosis

XTC
Sea Xchange

SCALE: n/a | DWG. #: SX0020 | SHEET 1 OF 1

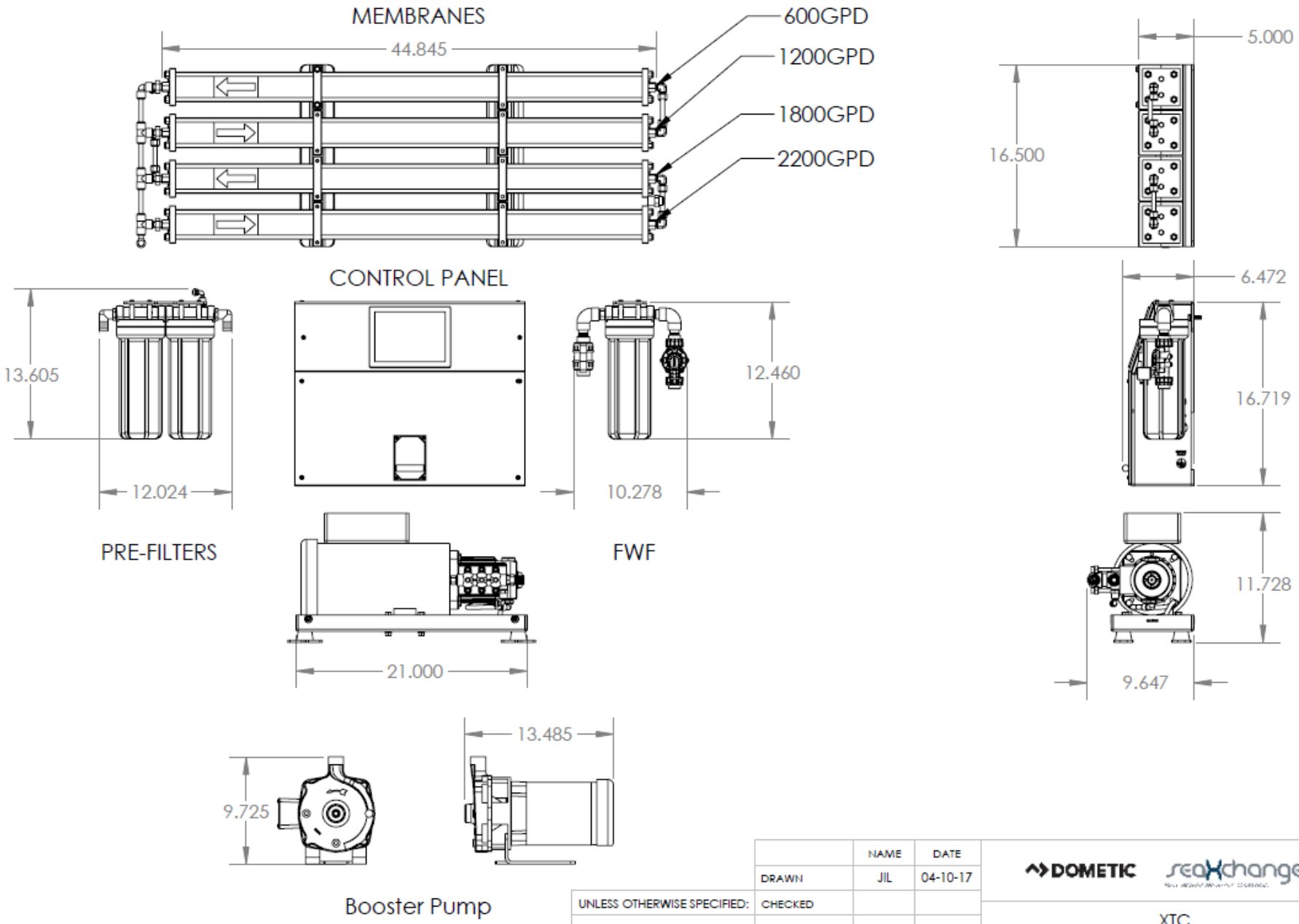

	NAME	DATE
DRAWN	JIL	04-10-17
CHECKED		
ENG APPR.		
MFG APPR.		
Q.A.		

UNLESS OTHERWISE SPECIFIED:

DIMENSIONS ARE IN INCHES
TOLERANCES: ±.015
FRACTIONAL ±1/32
ANGULAR: MACH ±1/2 BEND ±1
TWO PLACE DECIMAL ±.010
THREE PLACE DECIMAL ±.005

DOMETIC seaXchange

XTC
MODULAR

SCALE: N/A | DWG. #:SX0032 | SHEET 1 OF 1

PROPRIETARY AND CONFIDENTIAL
THE INFORMATION CONTAINED IN THIS DRAWING IS THE SOLE PROPERTY OF SPOT ZERO. ANY REPRODUCTION IN PART OR AS A WHOLE WITHOUT THE WRITTEN PERMISSION OF SPOT ZERO IS PROHIBITED.

BOTTOM VIEW
DRILL TEMPLATE & FOOTPRINT

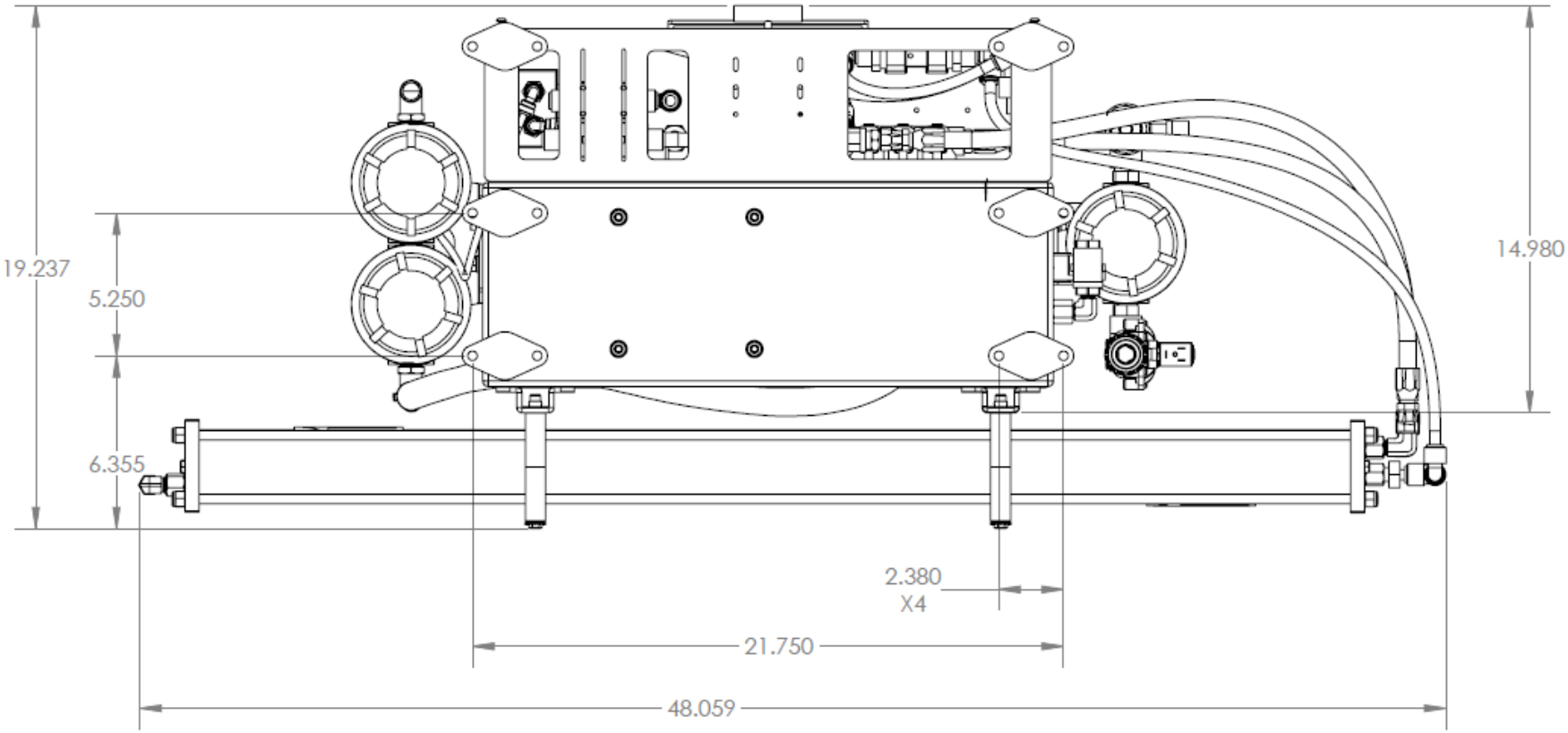

		NAME	DATE
	DRAWN	JIL	02-03-15
UNLESS OTHERWISE SPECIFIED:	CHECKED		
DIMENSIONS ARE IN INCHES TOLERANCES:±.015 FRACTIONAL±1/32 ANGULAR: MACH±1/2 BEND ±1 TWO PLACE DECIMAL ±.010 THREE PLACE DECIMAL ±.005	ENG APPR.		
	MFG APPR.		
	Q.A.		

DOMETIC

seaXchange
Sea Water Reverse Osmosis

XTC
DRILL TEMPLATE & FOOTPRINT

SCALE:N/A | DWG. #:SX0048 | SHEET 1 OF 1

PROPRIETARY AND CONFIDENTIAL
THE INFORMATION CONTAINED IN THIS DRAWING IS THE SOLE PROPERTY OF SPOT ZERO. ANY REPRODUCTION IN PART OR AS A WHOLE WITHOUT THE WRITTEN PERMISSION OF SPOT ZERO IS PROHIBITED.

NOTES:

1. (*) FOR XTC MODEL ONLY

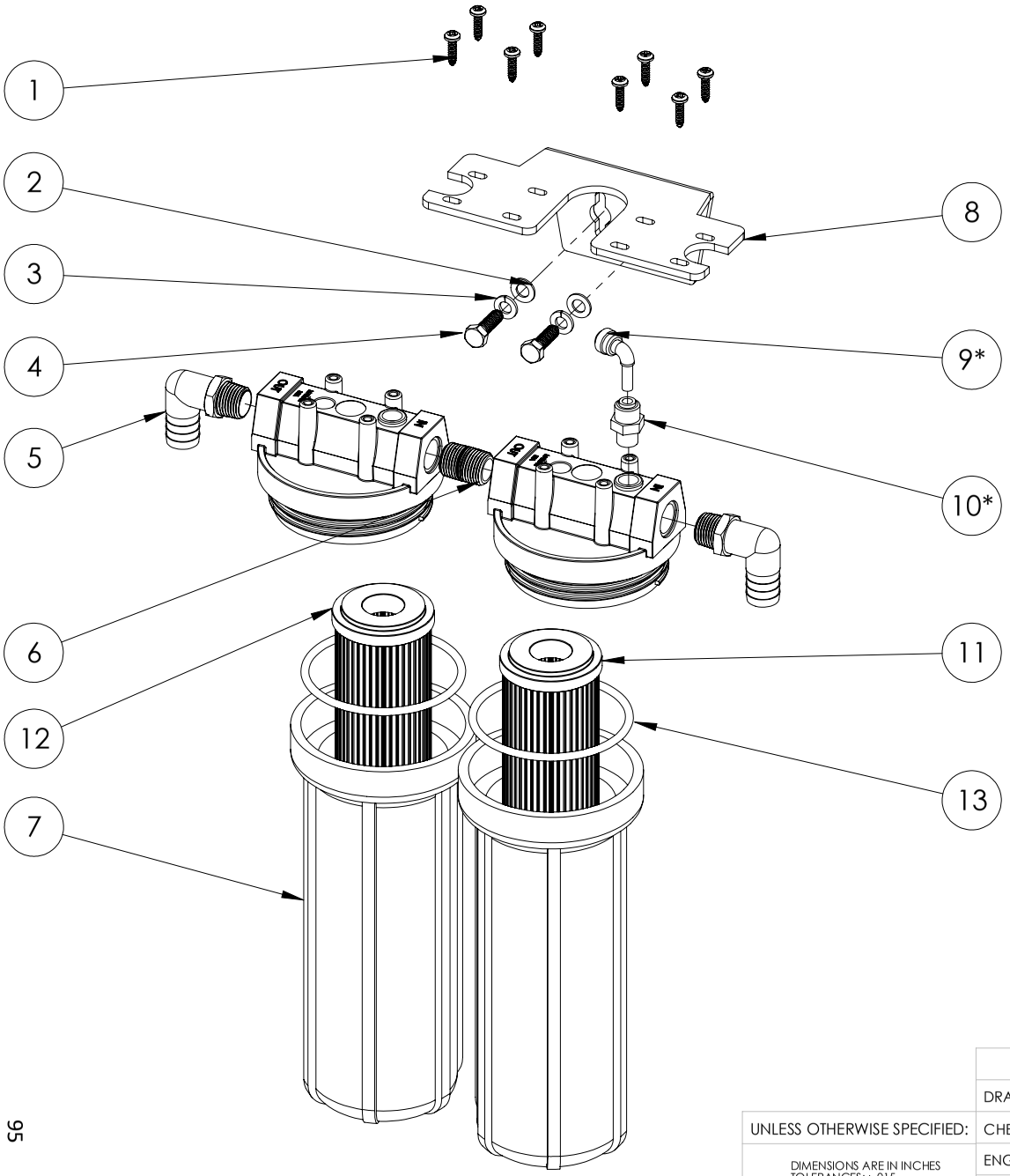

ITEM #	PART #	DESCRIPTION
1	252404854	10-24 X 1/2 PAN SS SCREW
2	252404806	5/16 SS WASHER
3	252404807	5/16 SS LOCK WASHER
4	252404800	5/16 X 1 SS HEX BOLT
5	252404861	1/2 MNPT X 3/4 BARB ELBOW NYLON
6	252404862	1/2 NIPPLE 1.5" THREADED
7	252404324	2.5 X 10 CLEAR HOUSING
8	252404863	DOUBLE PRE-FILTER BRACKET
9	252404836	1/4 PLUG IN ELBOW ACETAL
10	252404864	1/4 MNPT TO 1/4QC CONNECTOR ACETAL
11	252404018	20 MICRON FILTER
12	252404019	5 MICRON FILTER
13	252404856	2.5 x 10 CLEAR HOUSING O-RING
14	252404857	WRENCH FOR 2.5 CELAR HOUSING

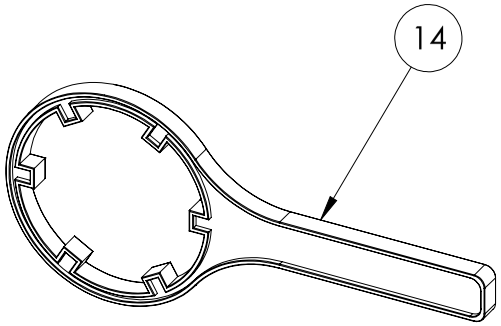

PROPRIETARY AND CONFIDENTIAL

THE INFORMATION CONTAINED IN THIS DRAWING IS THE SOLE PROPERTY OF SPOT ZERO. ANY REPRODUCTION IN PART OR AS A WHOLE WITHOUT THE WRITTEN PERMISSION OF SPOT ZERO IS PROHIBITED.

UNLESS OTHERWISE SPECIFIED:

DIMENSIONS ARE IN INCHES
TOLERANCES: ±.015
FRACTIONAL ±1/32
ANGULAR: MACH ±1/2 BEND ±1
TWO PLACE DECIMAL ±.010
THREE PLACE DECIMAL ±.005

	NAME	DATE
DRAWN	JIL	10-1-14
CHECKED		
ENG APPR.		
MFG APPR.		
Q.A.		

DOMETIC | seaXchange Sea Water Reverse Osmosis

SX/XTC/SE
PRE-FILTER SUB ASSEMBLY

SCALE: N/A | DWG. #:SX0041 | SHEET 1 OF 1

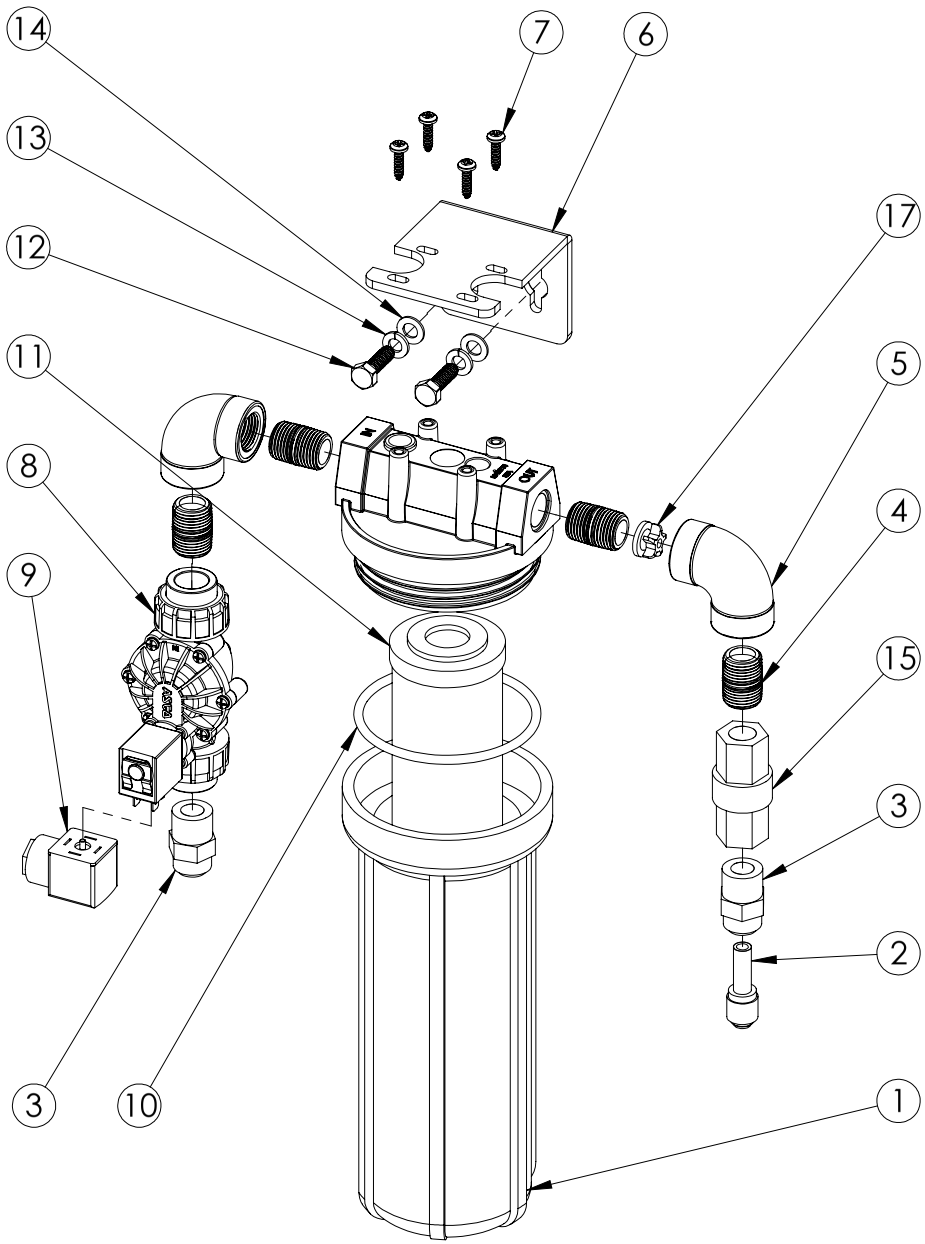

ITEM #	PART #	DESCRIPTION
1	252404324	2.5 X 10 CLEAR HOUSING
2	252404106	3/8 TO 1/4QC STEM REDUCER
3	252404099	1/2 MNPT X 3/8QC CONNECTOR ACETAL
4	252404214	1/2 THREADED NIPPLE
5	252404852	1/2 FNPT REINFORCED ELBOW
6	252404039	SINGLE PRE-FILTER BRACKET
7	252404854	10-24 X 1/2 PAN SS SCREW
8	SEE CHART	2-WAY SOLENOID
9	252404278	DIN CONNECTOR
10	252404127	2.5 CLEAR HOUSING O-RING
11	252404014	CARBON BLOCK FILTER
12	252404800	5/16 X 1 SS HEX BOLT
13	252404807	5/16 SS LOCK WASHER
14	252404806	5/16 SS WASHER
15	252404217	1/2 SPRING CHECK VALVE
16	252404326	WRENCH FOR 2.5 CELAR HOUSING
17	252404375	WATER RESTRICTOR 1.0

2-WAY SOLENOID		
SYSTEM VOLTAGE	SYSTEM MODEL	PART #
115V	SE/SXII	252404256
230V	SE/SXII	252404074
24V	XTC/XZ	252404397

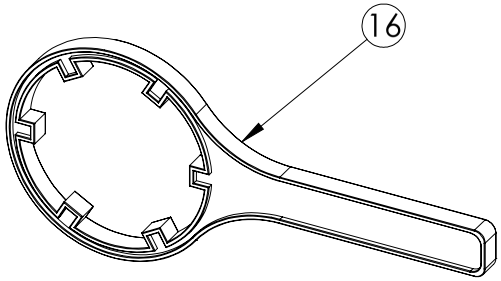

		NAME	DATE
	DRAWN	JIL	08-03-17
UNLESS OTHERWISE SPECIFIED:	CHECKED		
DIMENSIONS ARE IN INCHES TOLERANCES: ±.015 FRACTIONAL ±1/32 ANGULAR: MACH ±1/2 BEND ±1 TWO PLACE DECIMAL ±.010 THREE PLACE DECIMAL ±.005	ENG APPR.		
	MFG APPR.		
	Q.A.		

DOMETIC | seaXchange

SXII/XTC/SE
FRESH WATER FLUSH SUB ASSY

SCALE: 1:8 | DWG. #: SX0042 | SHEET 1 OF 1

PROPRIETARY AND CONFIDENTIAL
THE INFORMATION CONTAINED IN THIS DRAWING IS THE SOLE PROPERTY OF SPOT ZERO. ANY REPRODUCTION IN PART OR AS A WHOLE WITHOUT THE WRITTEN PERMISSION OF SPOT ZERO IS PROHIBITED.

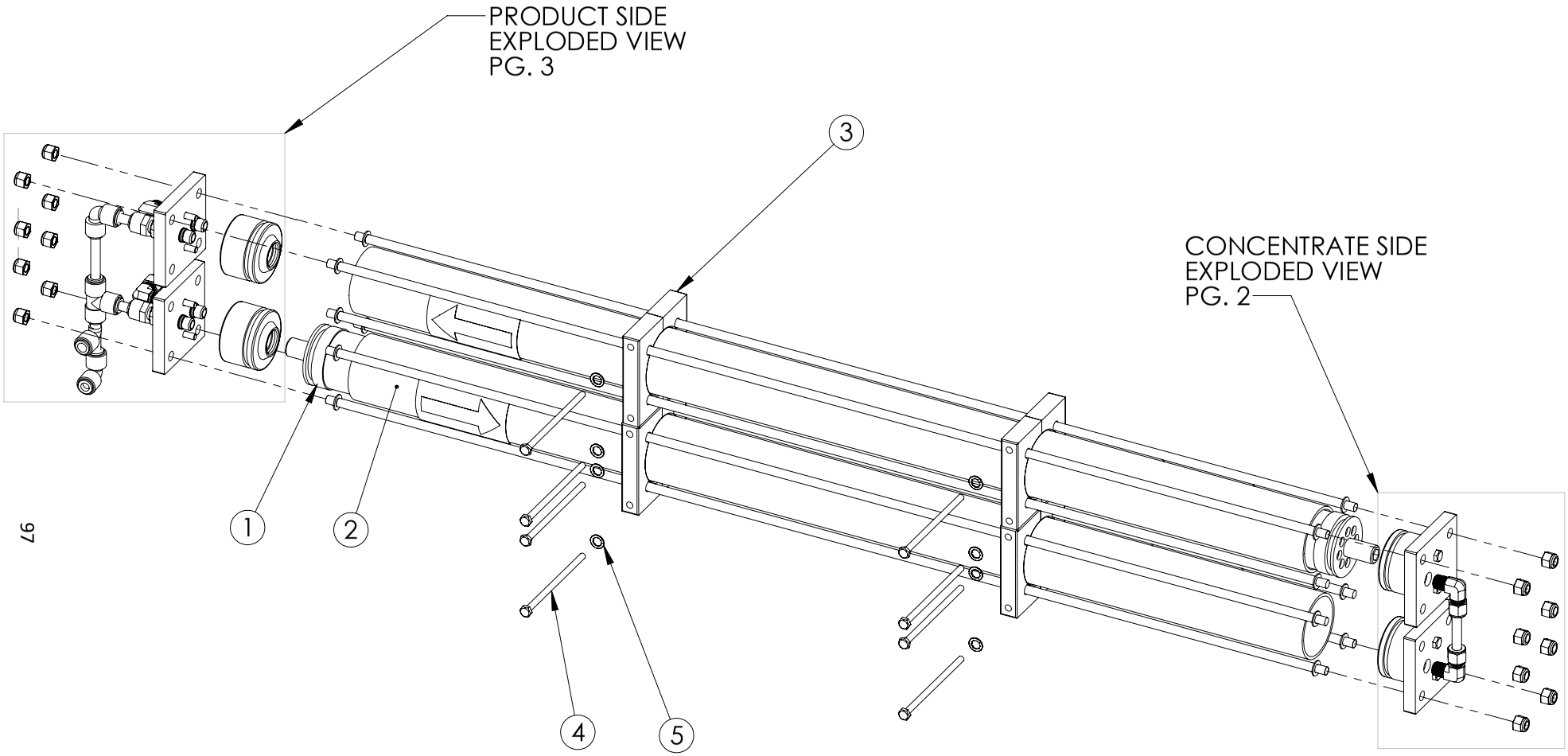

ITEM #	PRODUCT #	DESCRIPTION
1	252404179	SW MEMBRANE 40" LONG
2	252404312	SW PRESSURE VESSEL 40" LONG
1	252404178	SW MEMBRANE 20" LONG
2	252404281	SW VESSEL 20" LONG
3	252404868	MEBRANE MOUNTING BLOCK
4	252404869	1/4-20 X 5 HEX BOLT
5	252404870	1/4 WASHER

PROPRIETARY AND CONFIDENTIAL
THE INFORMATION CONTAINED IN THIS DRAWING IS THE SOLE PROPERTY OF SPOT ZERO. ANY REPRODUCTION IN PART OR AS A WHOLE WITHOUT THE WRITTEN PERMISSION OF SPOT ZERO IS PROHIBITED.

UNLESS OTHERWISE SPECIFIED:
DIMENSIONS ARE IN INCHES
TOLERANCES: ±.015
FRACTIONAL ±1/32
ANGULAR: MACH ±1/2 BEND ±1
TWO PLACE DECIMAL ±.010
THREE PLACE DECIMAL ±.005

	NAME	DATE
DRAWN	JIL	03-22-17
CHECKED		
ENG APPR.		
MFG APPR.		
Q.A.		

DOMETIC | seaXchange

SEA XCHANGE
VESSEL EXPLODED VIEW

SCALE: 1:16 | DWG. #: SX0105 | SHEET 1 OF 3

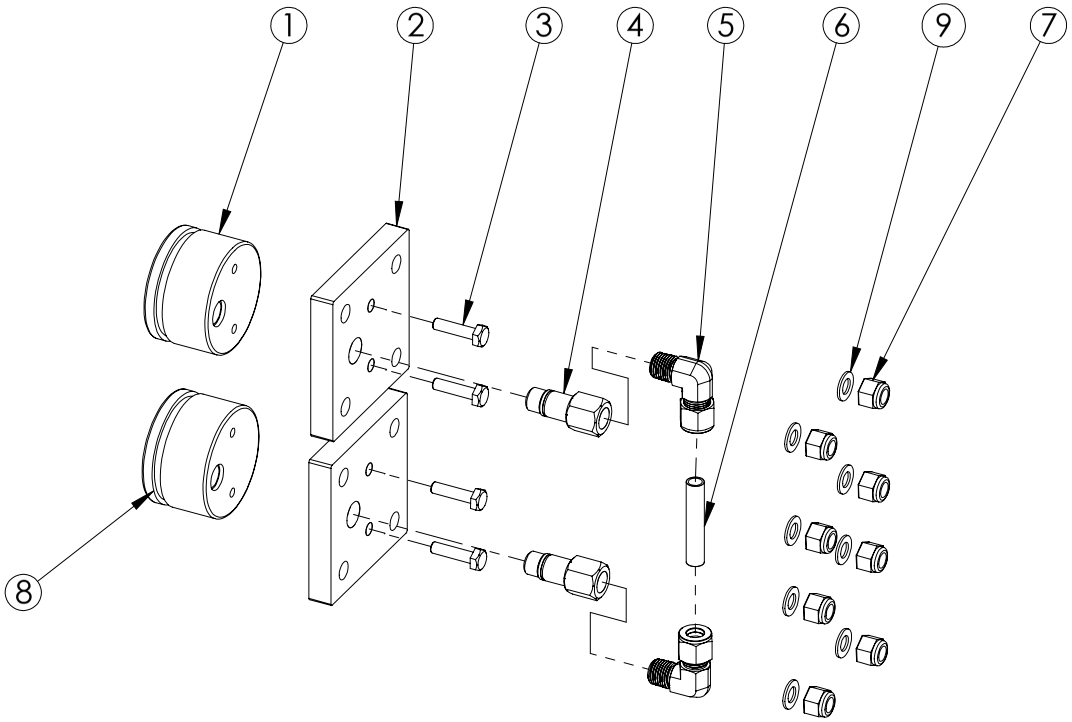

ITEM #	PRODUCT #	DESCRIPTION
1	252404814	END PLUG ONE PORT
2	252404815	BEARING PLATE ONE PORT
3	252404816	1/4-20 X BOLT SET OF 4
4	252404817	HEX PORT
5	252404271	1/4MNPT X 3/8 COMP. ELBOW SS
6	252404868	3/8 SS S HP TUBING FOR CONC. SIDE 3" LONG
7	252404819	3/8-16 LOCK NUT SET OF 8
8	252404820	END PLUG O-RING
9	252404821	1/4 SS WASHER

PROPRIETARY AND CONFIDENTIAL
THE INFORMATION CONTAINED IN THIS DRAWING IS THE SOLE PROPERTY OF SPOT ZERO. ANY REPRODUCTION IN PART OR AS A WHOLE WITHOUT THE WRITTEN PERMISSION OF SPOT ZERO IS PROHIBITED.

UNLESS OTHERWISE SPECIFIED:
DIMENSIONS ARE IN INCHES
TOLERANCES: ±.015
FRACTIONAL ±1/32
ANGULAR: MACH ±1/2 BEND ±1
TWO PLACE DECIMAL ±.010
THREE PLACE DECIMAL ±.005

	NAME	DATE
DRAWN	JILI	08-07-17
CHECKED		
ENG APPR.		
MFG APPR.		
Q.A.		

DOMETIC seaXchange Sea Water Reverse Osmosis

CONCENTRATE SIDE PARTS

SCALE: 1:16 | DWG. #SX0105 | SHEET 2 OF 4

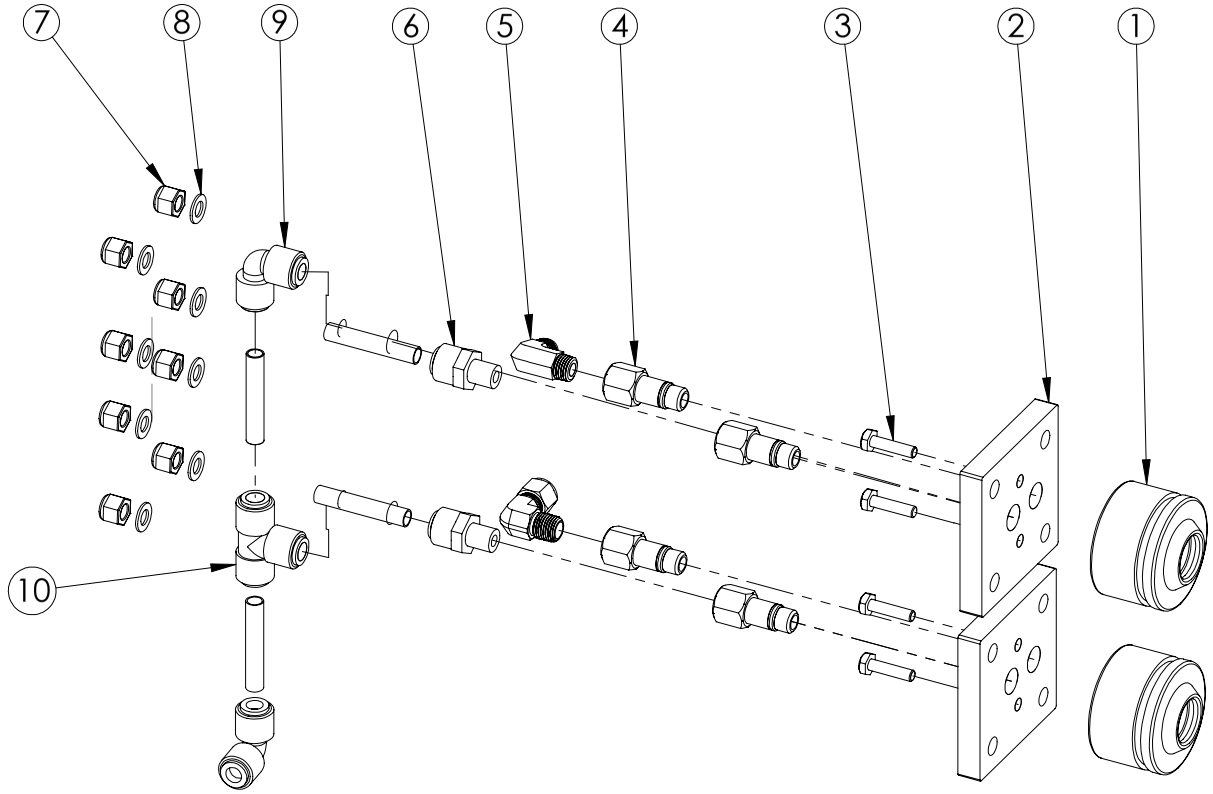

ITEM #	PRODUCT #	DESCRPITION
1	252404822	END PLUG TWO PORT
2	252404823	TWO PORT BEARING PLATE
3	252404816	1/4-20 X BOLT SET OF 4B1
4	252404817	HEX PORT
5	252404274	1/4MNPT X 3/8 FLARE ELBOW SS
6	252404125	1/4MNPT X 3/8QC ACETAL
7	252404819	3/8-16 LOCK NUT SET OF 8
8	252404821	3/8 WASHERS SET OF 8
9	252404109	3/8QC X 3/8QC ELBOW ACETAL
10	252404114	3/8QC TEE ACETAL

PROPRIETARY AND CONFIDENTIAL
THE INFORMATION CONTAINED IN THIS DRAWING IS THE SOLE PROPERTY OF SPOT ZERO. ANY REPRODUCTION IN PART OR AS A WHOLE WITHOUT THE WRITTEN PERMISSION OF SPOT ZERO IS PROHIBITED.

UNLESS OTHERWISE SPECIFIED:
DIMENSIONS ARE IN INCHES
TOLERANCES: ±.015
FRACTIONAL ±1/32
ANGULAR: MACH ±1/2 BEND ±1
TWO PLACE DECIMAL ±.010
THREE PLACE DECIMAL ±.005

	NAME	DATE
DRAWN	JIL	08-07-17
CHECKED		
ENG APPR.		
MFG APPR.		
Q.A.		

DOMETIC seaXchange Sea Water Reverse Osmosis

PRODUCT SIDE PARTS

SCALE: N/A | DWG.#: SX0105 | SHEET 3 OF 4

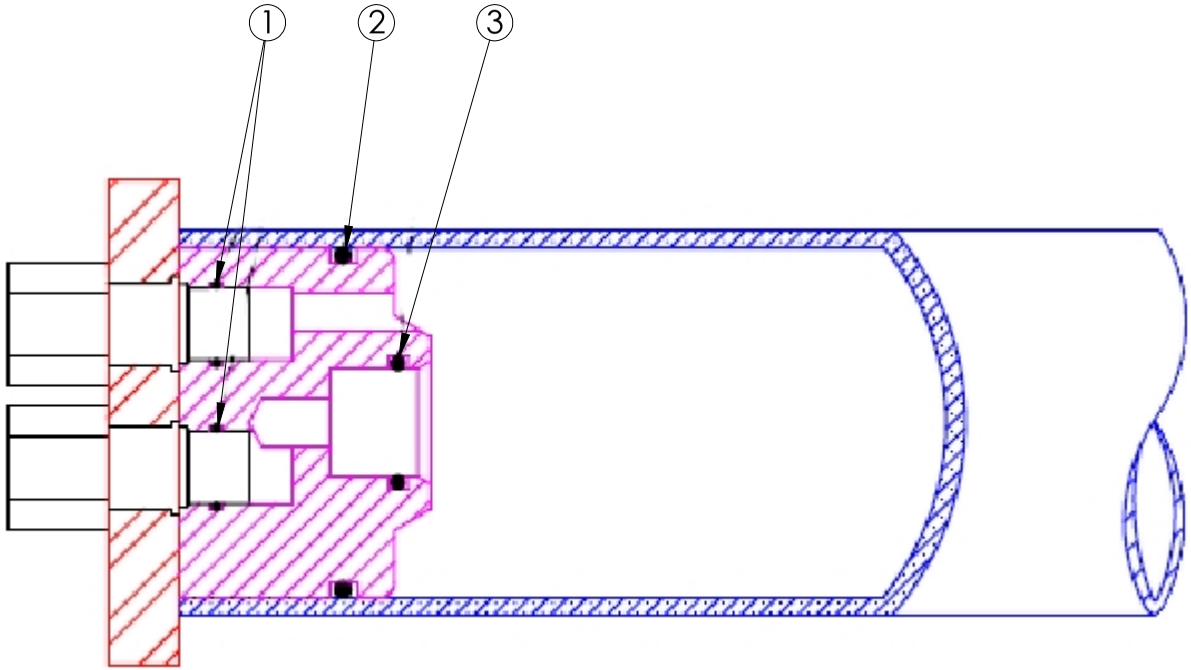

ITEM #	PART #	DESCRIPTION
1	252404826	PORT SEAL O-RING
2	252404820	END PLUG SEAL O-RING
3	252404828	HUB SEAL O-RING

SEAL KIT: 252404266

		NAME	DATE
	DRAWN	JIL	08-07-17
UNLESS OTHERWISE SPECIFIED:	CHECKED		
DIMENSIONS ARE IN INCHES TOLERANCES: ±.015 FRACTIONAL ±1/32 ANGULAR: MACH ±1/2 BEND ±1 TWO PLACE DECIMAL ±.010 THREE PLACE DECIMAL ±.005	ENG APPR.		
	MFG APPR.		
	Q.A.		

DOMETIC seaXchange Sea Water Reverse Osmosis

SW VESSEL O-RINGS

SCALE: N/A | DWG. #SX0105 | SHEET 4 OF 4

PROPRIETARY AND CONFIDENTIAL
THE INFORMATION CONTAINED IN THIS DRAWING IS THE SOLE PROPERTY OF SPOT ZERO. ANY REPRODUCTION IN PART OR AS A WHOLE WITHOUT THE WRITTEN PERMISSION OF SPOT ZERO IS PROHIBITED.

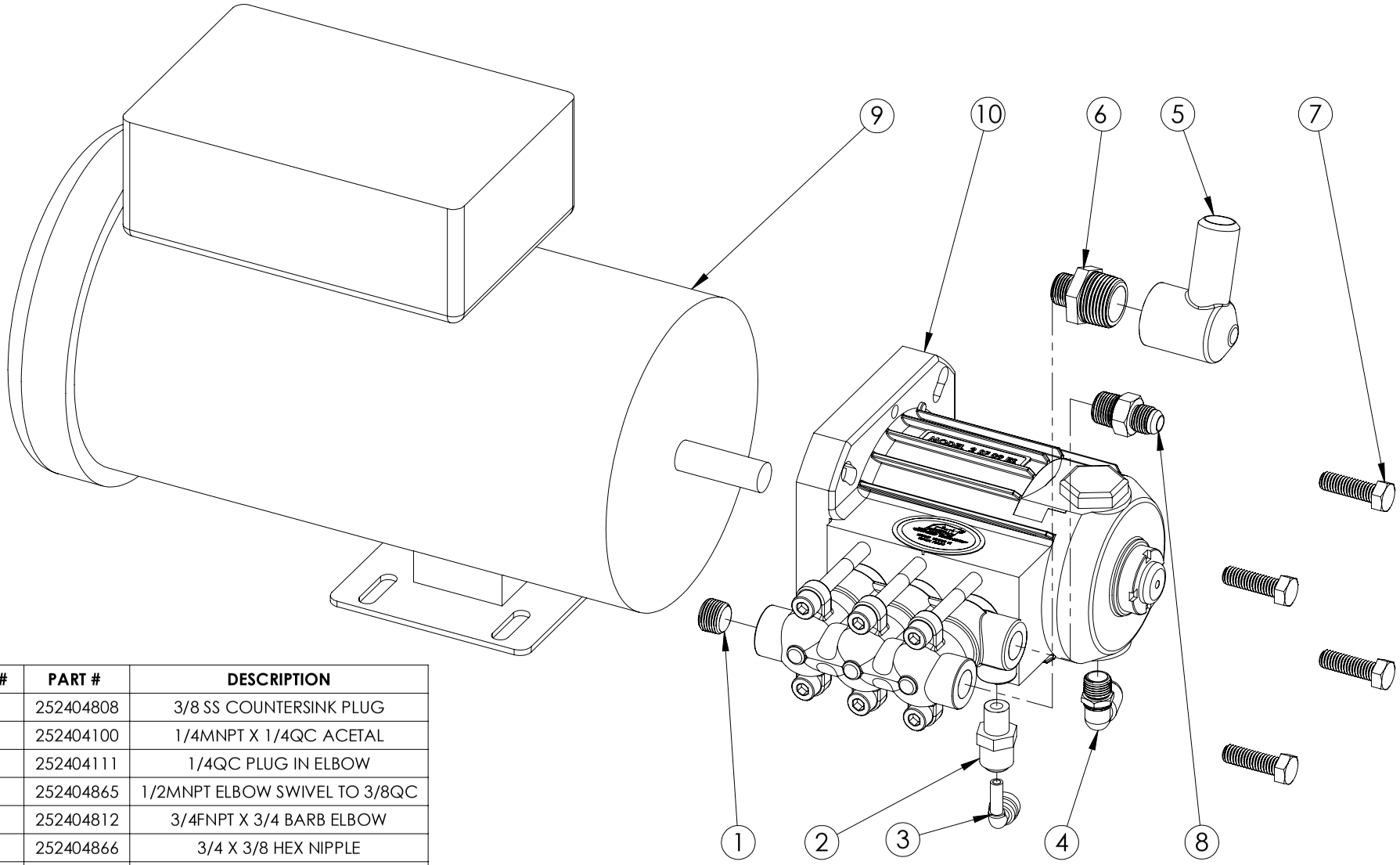

ITEM #	PART #	DESCRIPTION
1	252404808	3/8 SS COUNTERSINK PLUG
2	252404100	1/4MNPT X 1/4QC ACETAL
3	252404111	1/4QC PLUG IN ELBOW
4	252404865	1/2MNPT ELBOW SWIVEL TO 3/8QC
5	252404812	3/4FNPT X 3/4 BARB ELBOW
6	252404866	3/4 X 3/8 HEX NIPPLE
7	252404867	3/8-16 X 1 1/4 SS HEX BOLT
8	252404273	3/8MNPT X 3/8 FLARE STRAIGHT
9	252404155	2.5HP MOTOR
10	252404161	4.2GPM PUMP

PROPRIETARY AND CONFIDENTIAL
THE INFORMATION CONTAINED IN THIS DRAWING IS THE SOLE PROPERTY OF SPOT ZERO. ANY REPRODUCTION IN PART OR AS A WHOLE WITHOUT THE WRITTEN PERMISSION OF SPOT ZERO IS PROHIBITED.

UNLESS OTHERWISE SPECIFIED:
DIMENSIONS ARE IN INCHES
TOLERANCES: ±.015
FRACTIONAL ±1/32
ANGULAR: MACH ±1/2 BEND ±1
TWO PLACE DECIMAL ±.010
THREE PLACE DECIMAL ±.005

	NAME	DATE
DRAWN	JIL	08-03-17
CHECKED		
ENG APPR.		
MFG APPR.		
Q.A.		

DOMETIC seaXchange

SXII/XTC
PUMP AND MOTOR PARTS

SCALE: N/A | DWG. #: SX0126 | SHEET 1 OF 1

CONCENTRATE FLOW SENSOR

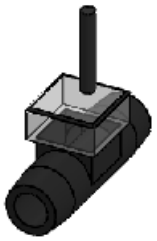

PART#: 252404875

PRODUCT FLOW SENSOR

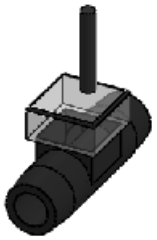

PART#: 252404874

LOW PRESSURE TRANSDUCER

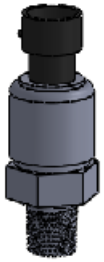

PART#: 252404878

HIGH PRESSURE TRANSDUCER

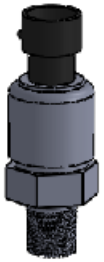

PART#: 252404877

TDS PC BOARD

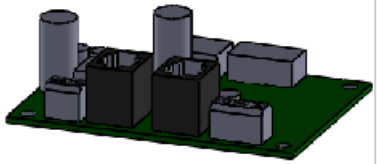

PART#: 252404277

TOUCH SCREEN

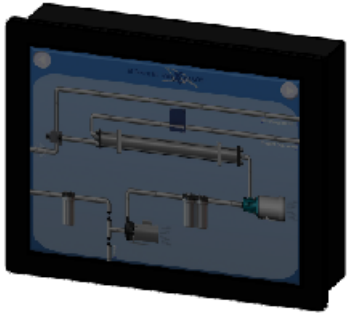

PART#: 252404180

PCO BOARD

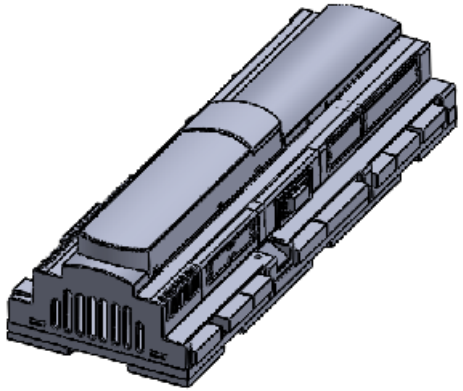

PART#: 252404336

POWER SUPPLY

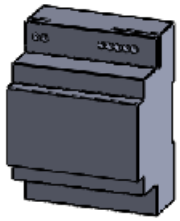

PART #: 252404873

DIVERSION VALVE (24V)

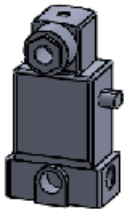

PART #: 252404875

		NAME	DATE
	DRAWN	JIL	04-19-17
UNLESS OTHERWISE SPECIFIED:	CHECKED		
DIMENSIONS ARE IN INCHES TOLERANCES: ±.015 FRACTIONAL ±1/32 ANGULAR: MACH ±1/2 BEND ±1 TWO PLACE DECIMAL ±.010 THREE PLACE DECIMAL ±.005	ENG APPR.		
	MFG APPR.		
	Q.A.		

DOMETIC

seaXchange
Sea Water Reverse Osmosis

SPARE PARTS

SCALE: N/A | DWG.#: SX0137 | SHEET 1 OF 1

8. XTC PLUMBING SCHEMATIC

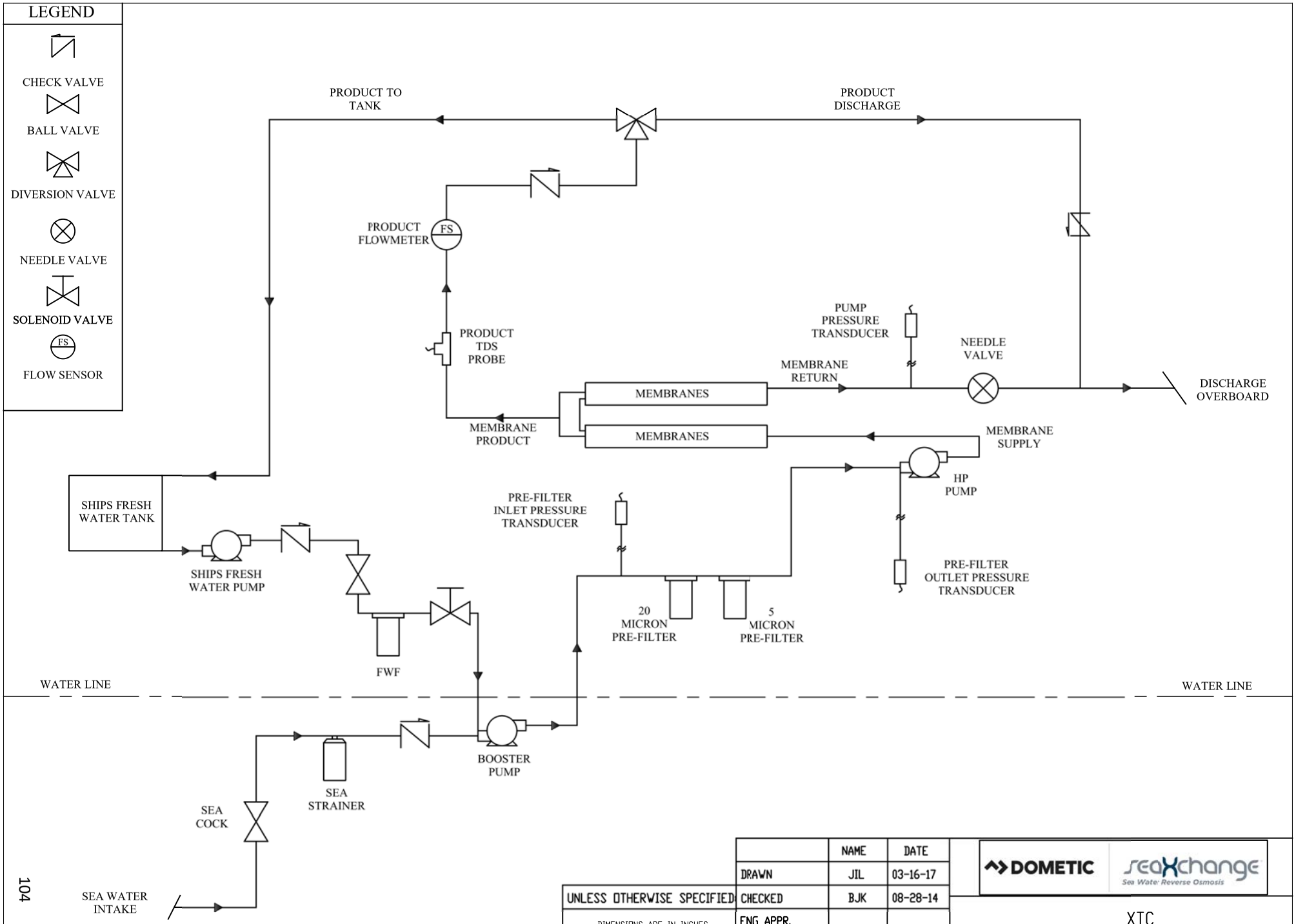

	NAME	DATE
DRAWN	JIL	03-16-17
CHECKED	BJK	08-28-14
ENG APPR.		
MFG APPR.		
Q.A.		

UNLESS OTHERWISE SPECIFIED

DIMENSIONS ARE IN INCHES
TOLERANCES: ±.015
FRACTIONAL ±1/32
ANGULAR: MACH ±1/2 BEND ±1
TWO PLACE DECIMAL ±.010
THREE PLACE DECIMAL ±.005

DOMETIC

seaXchange
Sea Water Reverse Osmosis

XTC
PIPING & INSTRUMENTATION

SCALE: N/A | DWG. #: SX0038 | SHEET 1 OF 1

PROPRIETARY AND CONFIDENTIAL
THE INFORMATION CONTAINED IN THIS DRAWING IS THE SOLE PROPERTY OF SPOT ZERO. ANY REPRODUCTION IN PART OR AS A WHOLE WITHOUT THE WRITTEN PERMISSION OF SPOT ZERO IS PROHIBITED.

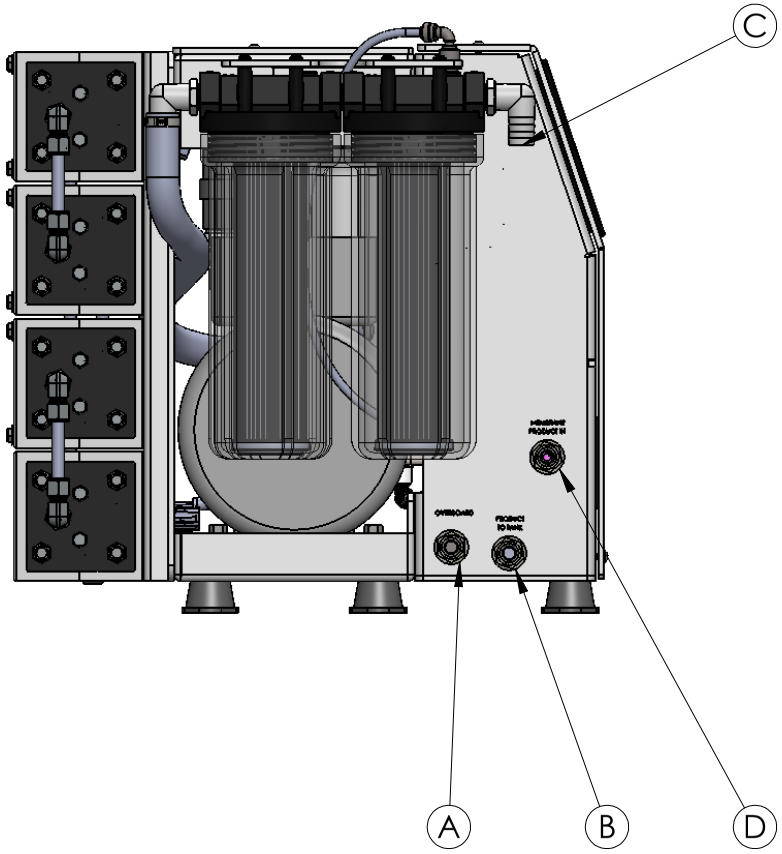

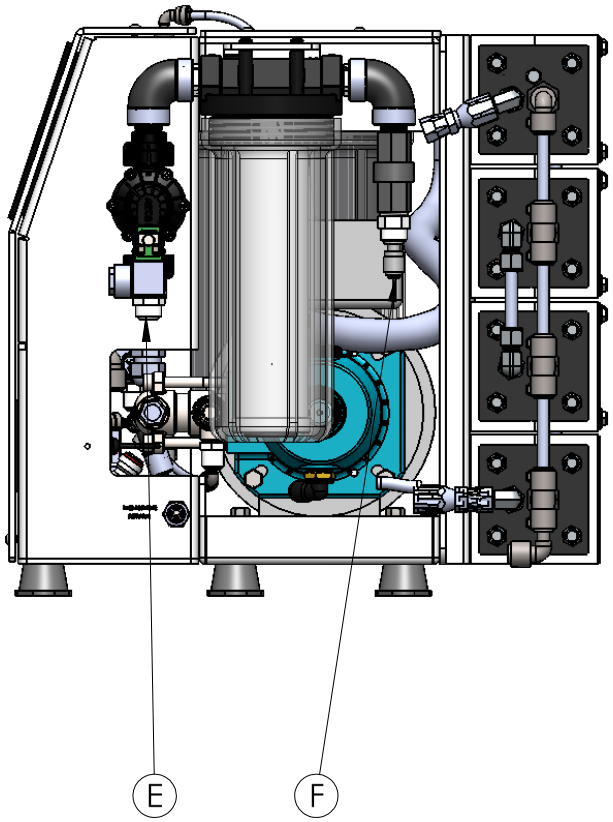

INLETS & OUTLETS		
LOCATION	**DESCRIPTION**	**SIZE**
A	OVERBOARD OUTLET	1/2" TUBE
B	PRODUCT WATER OUTLET	3/8" TUBE
C	SEA WATER INLET	3/4" HOSE
D	MEMBRANE PRODUCT IN	3/8" TUBE
E	FROM SHIPS PUMP	1/2" FNPT
F	TO BOOSTER PUMP	1/4" TUBE

PROPRIETARY AND CONFIDENTIAL
THE INFORMATION CONTAINED IN THIS DRAWING IS THE SOLE PROPERTY OF SPOT ZERO. ANY REPRODUCTION IN PART OR AS A WHOLE WITHOUT THE WRITTEN PERMISSION OF SPOT ZERO IS PROHIBITED.

UNLESS OTHERWISE SPECIFIED:

DIMENSIONS ARE IN INCHES
TOLERANCES: ±.015
FRACTIONAL ±1/32
ANGULAR: MACH ±1/2 BEND ±1
TWO PLACE DECIMAL ±.010
THREE PLACE DECIMAL ±.005

	NAME	DATE
DRAWN	JIL	04-10-17
CHECKED		
ENG APPR.		
MFG APPR.		
Q.A.		

DOMETIC | seaXchange

XTC
INLET & OUTLET LOCATIONS

SCALE: N/A | DWG. #: SX0052 | SHEET 1 OF 1

NOTES:

1. CONNECTIONS CAN BE MADE FROM THE TOP OR THE BOTTOM OF THE UNIT.
2. CLAMSHELL WATER INLET RECOMMENDED BEFORE SEA COCK.
3. REINFORCED HOSE NEEDED FROM SEA COCK TO BOOSTER PUMP.

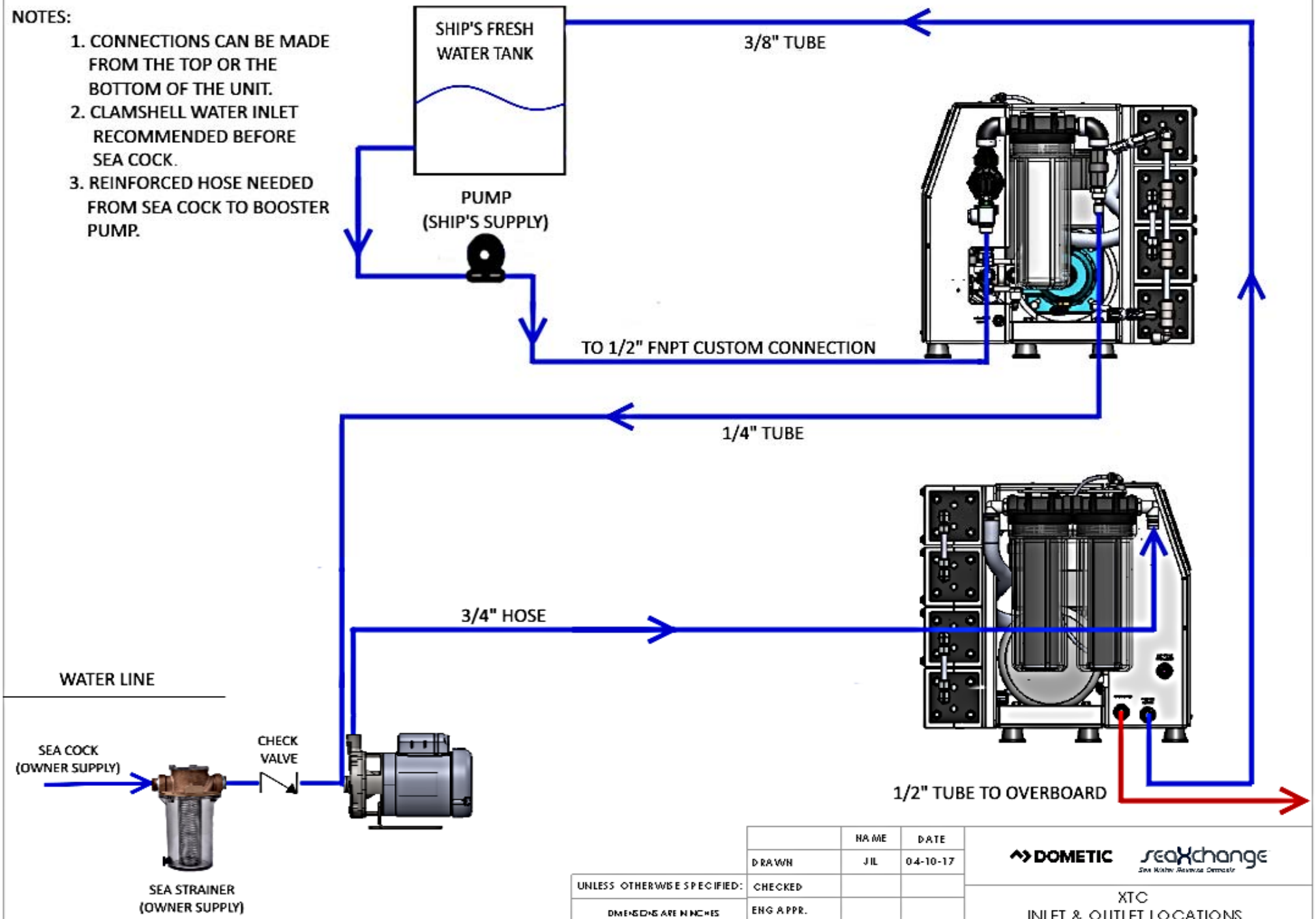

	NAME	DATE
DRAWN	JIL	04-10-17
CHECKED		
ENG APPR.		
MFG APPR.		
Q.A.		

UNLESS OTHERWISE SPECIFIED:

DIMENSIONS ARE IN INCHES
TOLERANCES: ±.015
FRACTIONAL ±1/32
ANGULAR: MACH ±1/2 BEND ±1
TWO PLACE DECIMAL ±.010
THREE PLACE DECIMAL ±.005

DOMETIC seaXchange Sea Water Reverse Osmosis

XTC
INLET & OUTLET LOCATIONS

SCALE: N/A | DWG. #: SX0052 | SHEET 1 OF 1

PROPRIETARY AND CONFIDENTIAL
THE INFORMATION CONTAINED IN THIS DRAWING IS THE SOLE PROPERTY OF SPOT ZERO. ANY REPRODUCTION IN PART OR AS A WHOLE WITHOUT THE WRITTEN PERMISSION OF SPOT ZERO IS PROHIBITED.

9. APPENDIX

CAT PUMP MANUAL

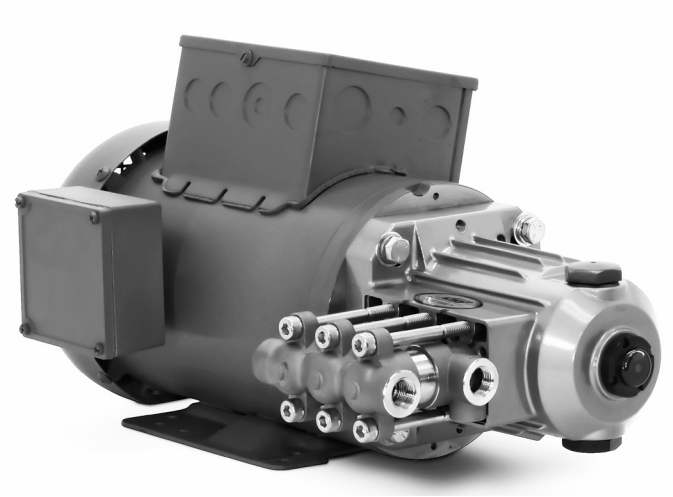

Motorized pump unit 2SF42SEEL251 Shown

Stainless Steel
Direct-Drive Plunger Pump

Models 2SF05SEEL, 2SF10SEEL 2SF15SEEL, 2SF22SEEL 2SF25SEEL, 2SF29SEEL 2SF35SEEL, 2SF42SEEL

FEATURES

- Unique spring loaded inlet valves and the flow through ceramic plungers provides a smooth, steady flow.
- Optional EPDM and FPM elastomers for compatibility with many liquids.
- Hollow shaft direct drive to provide the smallest possible footprint for challenging spaces.

COMMON SPECIFICATIONS

Discharge Pressure Range	100-1200 psi	7-85 bar
Inlet Pressure Range	Flooded to 60 psi	Flooded to 4 bar
Shaft Diameter	5/8″	15.9 mm
RPM	1725 rpm	1725 rpm
Bore	0.709″	18 mm
Bore (2SF42SEEL Only)	0.787″	20 mm
Maximum Liquid Temperature	160°F	70°C
Above 130°F call CAT PUMPS for inlet conditions and elastomer recommendations.		
Crankcase Capacity	11.15 oz.	0.33 l
Inlet Port (1)	3/8″ NPT(F)	3/8″ NPT(F)
Discharge Ports (2)	3/8″ NPT(F)	3/8″ NPT(F)
By-Pass Return Port (1)	1/4″ NPT(F)	1/4″ NPT(F)
Weight (Pump Only)	8.9 lbs.	4 kg
Dimensions (Pump Only)	6.8 x 8.7 x 5.2″	173 x 221 x 133 mm

⚠ CAUTIONS AND WARNINGS

All High Pressure Systems require a primary pressure regulating device (i.e. regulator, unloader) and a secondary pressure relief device (i.e. pop-off valve, relief valve). Failure to install such relief devices could result in personal injury or damage to pump or property. CAT PUMPS does not assume any liability or responsibility for the operation of a customer's high pressure system.

Read all CAUTIONS and WARNINGS before commencing service or operation of any high pressure system. The CAUTIONS and WARNINGS are included in each service manual and with each Accessory Data sheet. CAUTIONS and WARNINGS can also be viewed online at www.catpumps.com/cautions-warnings or can be requested directly from CAT PUMPS.

WARRANTY

View the Limited Warranty on-line at www.catpumps.com/warranty.

SPECIFICATIONS

	U.S. Measure	Metric Measure
MODEL 2SF05SEEL		
Flow (60 Hz-1725 rpm)	0.5 gpm	1.9 lpm
Flow (50 Hz-1450 rpm)	0.42 gpm	1.6 lpm
Stroke	0.071″	1.8 mm
MODEL 2SF10SEEL		
Flow (60 Hz-1725 rpm)	1.0 gpm	3.8 lpm
Flow (50 Hz-1450 rpm)	0.84 gpm	3.1lpm
Stroke	0.122″	3.1 mm
MODEL 2SF15SEEL		
Flow (60 Hz-1725 rpm)	1.5 gpm	5.7 lpm
Flow (50 Hz-1450 rpm)	1.26 gpm	4.8 lpm
Stroke	0.177″	4.5 mm
MODEL 2SF22SEEL		
Flow (60 Hz-1725 rpm)	2.2 gpm	8.3 lpm
Flow (50 Hz-1450 rpm)	1.84 gpm	7.0 lpm
Stroke	0.248″	6.3 mm
MODEL 2SF25SEEL		
Flow (60 Hz-1725 rpm)	2.5 gpm	9.5 lpm
Flow (50 Hz-1450 rpm)	2.1 gpm	7.9 lpm
Stroke	0.287″	7.3 mm
MODEL 2SF29SEEL		
Flow (60 Hz-1725 rpm)	2.85 gpm	10.8 lpm
Flow (50 Hz-1450 rpm)	2.4gpm	9.1 lpm
Stroke	0.335″	8.5 mm
MODEL 2SF35SEEL		
Flow (60 Hz-1725 rpm)	3.5 gpm	13.2 lpm
Flow (50 Hz-1450 rpm)	2.9 gpm	11.0 lpm
Stroke	0.402″	10.2 mm
MODEL 2SF42SEEL		
Flow (60 Hz-1725 rpm)	4.2 gpm	15.9 lpm
Flow (50 Hz-1450 rpm)	3.5 gpm	13.2 lpm
Discharge Pressure Range	100-1000 psi	7-70 bar
Stroke	0.402″	10.2 mm

Refer to pump **Service Manual** for repair procedure and additional technical information.

PARTS LIST

ITEM	P/N	MATL	DESCRIPTION	MODEL USED	QTY
5	547445	S	Screw, HHC Sems (M6x14) [3/03]	All	3
8	547153	AL	Cover, Bearing [3/03]	All	1
10	14041	NBR	O-Ring, Bearing Cover-70D [3/03]	All	1
11	55337	NBR	Seal, Oil, Crankshaft -70D [3/03]	All	1
15	14488	STL	Bearing, Ball - Inner	All	1
20	547046	TNM	Rod, Connecting	All	3
25	**831987**	**CM**	Crankshaft, 1.8mm	05SEEL	1
	46109	**CM**	Crankshaft, 3.1mm	10SEEL	1
	44931	**CM**	Crankshaft, 4.5mm	15SEEL	1
	45160	**CM**	Crankshaft, 6.3mm	22SEEL	1
	544693	**CM**	Crankshaft, 7.3mm	25SEEL	1
	45914	**CM**	Crankshaft, 8.5mm	29SEEL	1
	544694	**CM**	Crankshaft, 10.2mm	35SEEL, 42SEEL	1
26	12385	STL	Ring, Retaining, Bearing	All	1
27	15710	STL	Bearing, Ball - Outer	All	1
31	*549726*	—	*Cap, Vented w/O-Ring (Rain Cap)*	*All*	*1*
32	547961	RTP	Cap, Oil Filler w/O-Ring	All	1
33	14179	NBR	O-Ring, Oil Filler Cap - 70D	All	1
37	92241	–	Gauge, Oil w/Gasket - 80D	All	1
38	44428	NBR	Gasket, Flat, Oil Gauge - 80D	All	1
48	44842	NY	Plug, Drain	All	1
49	14179	NBR	O-Ring, Drain Plug - 70D	All	1
53	547285	AL	Crankcase (See Tech Bulletin 92)	All	1
64	16948	CM	Pin, Crosshead	All	3
65	544695	SSZZ	Rod, Plunger	All	3
69	126259	STCP R	Washer, Oil Seal	All	3
70	25461	NBR	Seal, Oil Crankcase	All	3
90	**544697**	**CC**	Plunger, Ceramic (M18x18)	05-35SEEL	3
	831290	**CC**	Plunger, Ceramic (M20x18)	42SEEL	3
100	44869	PVDF	Retainer, Seal	All	3
106	**547683**	**NBR**	Seal, LPS w/SS-Spg	All	3
	545192	***FPM***	*Seal, LPS w/SS-Spg*	*All*	*3*
	546507	***EPDM***	*Seal, LPS w/SS-Spg*	*All*	*3*
110	**547704**	**SS**	Manifold, Inlet	05-35SEEL	1
	831288	**SS**	Manifold, Inlet	42SEEL	1
125	**44652**	**SNG**	Seal, HPS w/SS	05-35SEEL	3
	46652	***HT****	*Seal, Hi-Temp, 2-Pc w/S-Support*	*05-35SEEL*	*3*
	44649	**SNG**	Seal, HPS w/SS	42SEEL	3
	44936	***FPM***	*Seal, HPS w/SS*	*42SEEL*	*3*
	46667	***HT****	*Seal, Hi-Temp, 2-Pc w/S-Support*	*42SEEL*	*3*
134	**543691**	**SS**	Valve, Inlet (See Tech Bulletin 91)	05-35SEEL	3
	33873	***NY***	*Valve, Inlet (See Tech Bulletin 91)*	*05-35SEEL*	*3*
	831400	**SS**	Valve, Inlet	42SEEL	3
135	543689	SS	Spacer	All	3
136	543690	SS	Spring, Inlet Valve	All	3
137	88575	S	Washer, Conical (M6)	All	3
138	543692	SS	Nut (M6)	All	3

ITEM	P/N	MATL	DESCRIPTION	MODEL USED	QTY
152	**† 26089**	**NBR**	O-Ring, Adapter Spacer, Inner-80D	05-35SEEL	3
	11377	***FPM***	*O-Ring, Adapter Spacer, Inner-80D*	*05-35SEEL*	*3*
	46647	***EPDM***	*O-Ring, Adapter Spacer, Inner-80D*	*05-35SEEL*	*3*
	549539	**NBR**	O-Ring, Adapter Spacer, Inner-70D	42SEEL	3
	129977	***FPM***	*O-Ring, Adapter Spacer, Inner-70D*	*42SEEL*	*3*
	129978	***EPDM***	*O-Ring, Adapter Spacer, Inner-70D*	*42SEEL*	*3*
157	**544700**	**SS**	Adapter, Valve	05-35SEEL	3
	831289	**SS**	Adapter, Valve	42SEEL	3
159	† 26089	NBR	O-Ring, Adapter Spacer, Outer-80D	All	3
	11377	*FPM*	*O-Ring, Adapter Spacer, Outer-80D*	*All*	*3*
	46647	*EPDM*	*O-Ring, Adapter Spacer, Outer-80D*	*All*	*3*
164	544293	SS	Seat	All	3
166	543669	SS	Valve	All	3
167	543700	SS	Spring	All	3
168	44565	PVDF	Retainer, Spring	All	3
185	547705	SS	Manifold, Discharge	All	1
188	544701	S	Screw, HSH (M8x80)	All	6
255	30517	STZP R	Assy, Bolt Mount	All	1
283	*990394*	–	*Kit, Oil Drain*	*All*	*1*
285	*80228*	*STL*	*Screw (M8-1.25x80) (Motor Removal) (Not Shown)*	*All*	*2*
300	***34973***	***NBR***	*Kit, Seal (Inclds: 106, 125, 152, 159)*	*05-35SEEL*	*1*
	33453	***FPM***	*Kit, Seal (Inclds: 106, 125, 152, 159)*	*05-35SEEL*	*1*
	30536	***EPDM****	*Kit, Seal (Inclds: 106, 125, 152, 159)*	*05-35SEEL*	*1*
	76973	***NBR***	*Kit, Seal (Inclds: 106, 125, 152, 159)*	*42SEEL*	*1*
	76955	***FPM***	*Kit, Seal (Inclds: 106, 125, 152, 159)*	*42SEEL*	*1*
	76996	***EPDM***	*Kit, Seal (Inclds: 106, 125, 152, 159)*	*42SEEL*	*1*
310	***34972***	***NBR***	*Kit, Valve (Inclds: 152,159,164,166,167,168)*	*05-35SEEL*	*1*
	33454	***FPM***	*Kit, Valve (Inclds: 152,159,164,166,167,168)*	*05-35SEEL*	*1*
	30546	***EPDM***	*Kit, Valve (Inclds: 152,159,164,166,167,168)*	*05-35SEEL*	*1*
	76972	***NBR***	*Kit, Valve (Inclds: 152,159,164,166,167,168)*	*42SEEL*	*1*
	76445	***FPM***	*Kit, Valve (Inclds: 152,159,164,166,167,168)*	*42SEEL*	*1*
	76446	***EPDM***	*Kit, Valve (Inclds: 152,159,164,166,167,168)*	*42SEEL*	*1*
311	***39668***	***NBR***	*Kit, Inlet Valve w/SS-IV (Inclds:134-138,152,159)*	*05-35SEEL*	*1*
	34974	***NBR***	*Kit, Inlet Valve w/NY-IV (Inclds:134-138,152,159)*	*05-35SEEL*	*1*
	33460	***FPM***	*Kit, Inlet Valve w/NY-IV (Inclds:134-138,152,159)*	*05-35SEEL*	*1*
	30556	***EPDM***	*Kit, Inlet Valve w/NY-IV (Inclds:134-138,152,159)*	*05-35SEEL*	*1*
	76668	***NBR***	*Kit, Inlet Valve w/SS-IV (Inclds:134-138,152,159)*	*42SEEL*	*1*
	76465	***FPM***	*Kit, Inlet Valve w/SS-IV (Inclds:134-138,152,159)*	*42SEEL*	*1*
	76466	***EPDM***	*Kit, Inlet Valve w/SS-IV (Inclds:134-138,152,159)*	*42SEEL*	*1*
352	*44050*	*STZP*	*Tool, Oil Gauge Removal*	*All*	*1*
–	*6107*	*–*	*Oil, Bottle (21 oz) ISO-68 Hydraulic*	*All*	*1*
			(Fill to specified crankcase capacity prior to start-up)		

Bold print part numbers are unique to a particular pump model. *Italics are optional items.*
[ ] Date of latest production change. † Production parts are different than repair parts. R Components comply with RoHS Directive.
*Review individual parts in each kit for material code identification.
View Tech Bulletins 002, 036, 043, 055, 064, 070, 073, 074, 091, 092 and 095 for additional information.
NOTE: Discard Key that may come standard with most motors and engines and use only the key included in Bolt kit.
MATERIAL CODES (Not Part of Part Number): AL=Aluminum CC=Ceramic CM=Chrome-Moly
EPDM=Ethylene Propylene Diene Monamer FPM=Fluorocarbon HT=Hi-Temp (EPDM Alternative) NBR=Medium Nitrile (Buna-N) NY=Nylon
PVDF=Polyvinylidene Fluoride RTP=Reinforced Composite S=304SS SNG=Special Blend (Buna) SS=316SS SSZZ=316SS Zamak STL=Steel
STCP=Steel/Chrome Plated STZP=Steel/ZincPlated TNM=Special High Strength

EXPLODED VIEW

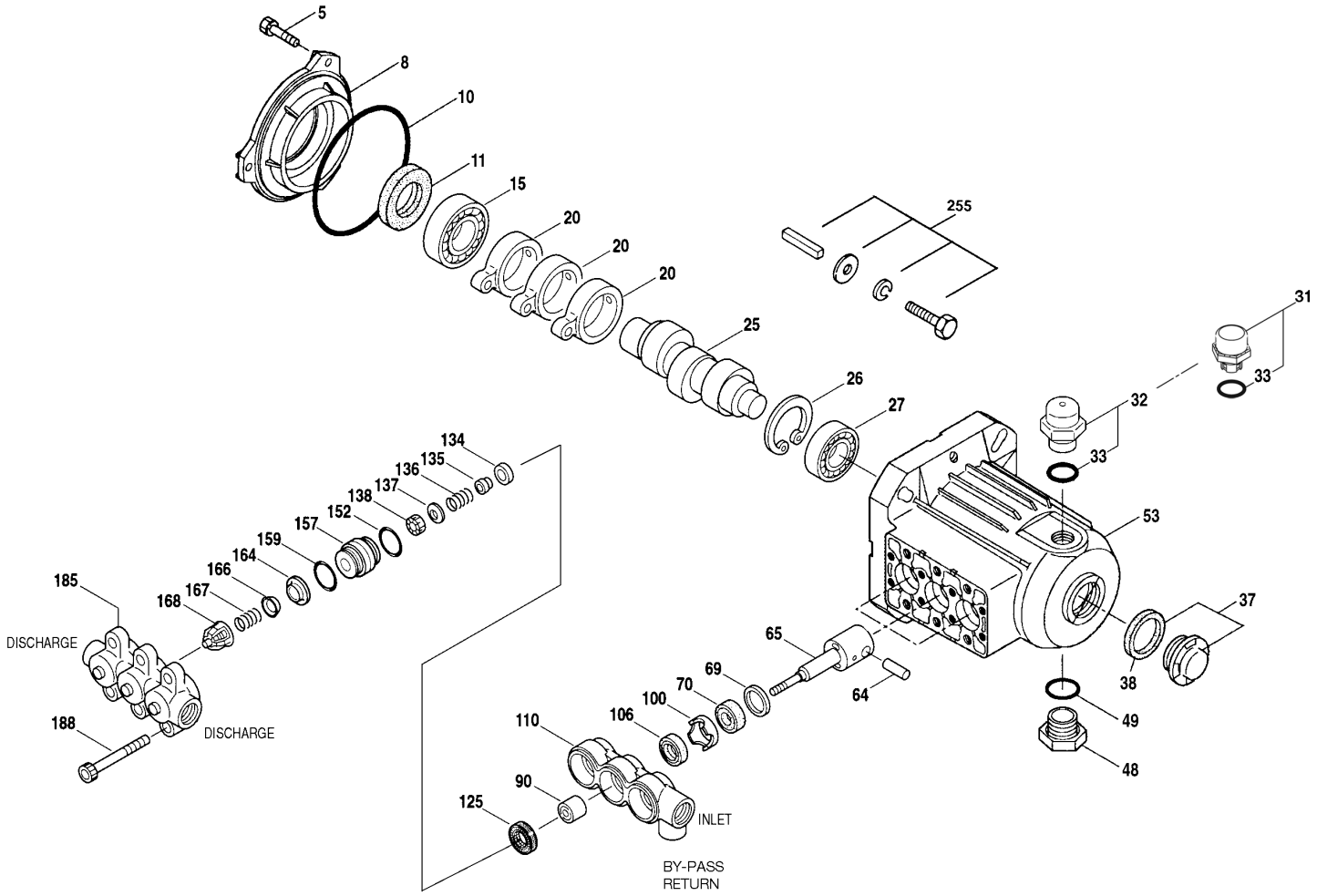

Models

2SF05SEEL, 2SF10SEEL

2SF15SEEL, 2SF22SEEL

2SF25SEEL, 2SF29SEEL

2SF35SEEL, 2SF42SEEL

April 2014

MODEL	8105	8175	8110	8060	8062	8082	8125
Dimension A	15.9	15.9	17.1	18.7	19.2	18.0	19.0
Dimension B	9.0	9.0	10.2	11.8	12.3	11.2	12.2
Dimension C	8.2	8.2	8.2	8.1	8.1	6.9	9.6
Dimension D	9.1	9.1	9.1	9.5	9.5	9.5	9.7

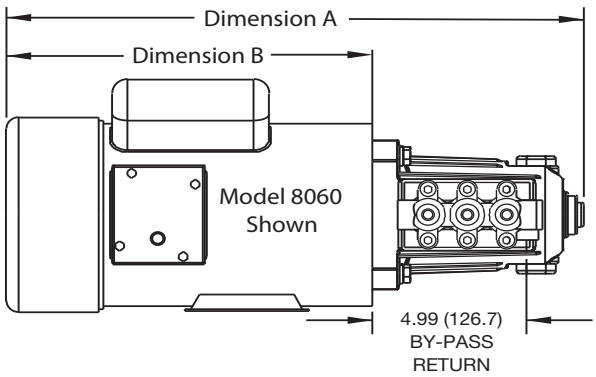

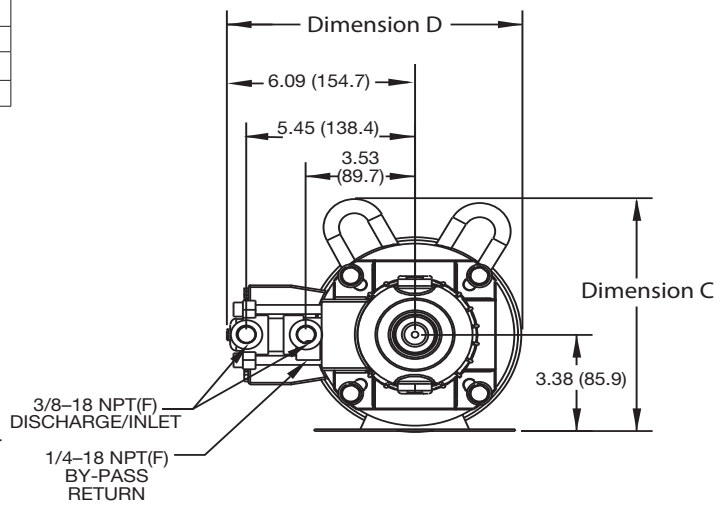

Models 2SF05SEEL, 2SF10SEEL, 2SF15SEEL, 2SF25SEEL, 2SF29SEEL, 2SF35SEEL, 2SF42SEEL

MOTOR SPECIFICATIONS

MODEL	8105	8175	8110	8060	8062	8082	8125
HorsePower	**0.5**	0.75	**1.0**	1.5	2.0	2.0/1.5	2.5
Phase	Single	Single	Single	Single	Single	Three	Single
RPM	1750	1745	1750	1725	1725	1725/1425	1750/1450
Frame Size	56C TEFC	56C TEFC	56C TEFC	56C TEFC	56C TEFC	56HC TEFC	56HC TEFC
Shaft Diameter (inches)	5/8	5/8	5/8	5/8	5/8	5/8	5/8
Maximum Volts	115/208-230	115/208-230	115/208-230	115/230	115/230	230/460 190/380	115/230 110/220
FULL LOAD AMPS	7.4/3.6-3.7	10.6/5.2-5.3	14/6.8-7.0	14.0/7.0	17.0/8.5	5.9-5.6/2.8 5.2/2.6	21/11.5 23.6/11.8
Hertz	60	60	60	60	60	60/50	60/50
Service Factor	1.15	1.15	1.15	1.2	1.15	1.15	1.2/1.0
Max. Ambient Temp. (°F)	104	104	104	104	104	104	104
Capacitor Start	Yes	Yes	Yes	Yes	Yes	No	Yes
Thermal Overload-Manual Reset	No	Yes	No	Yes	Yes	No	No
Weight (lbs.)	25	28	34	42	45.7	40	52.9

NOTE: Motor start-up AMPS may vary, then settle within FULL LOAD AMPS rating after initial run time.

ELECTRIC HORSEPOWER REQUIREMENTS

FLOW		PRESSURE psi (bar)			PUMP rpm
U.S. gpm	Metric lpm	700 (50)	1000 (70)	1200 (85)	
0.5	1.9	0.24	0.35	0.41	1725
1.0	3.8	0.48	0.68	0.82	1725
1.5	5.7	0.72	1.03	1.23	1725
2.5	9.5	1.19	1.71	2.05	1725
2.85	10.8	1.36	2.0	2.3	1725
3.5	13.2	1.67	2.39	2.87	1725
4.2	15.9	2.01	2.88	N/A	1725

DETERMINING REQUIRED H.P.

$$\frac{\text{gpm x psi}}{1460} = \text{Electric Brake H.P. Required}$$

★★ Before mounting pump on motor, apply P.N. 6106 Antiseize Lubricant to pump shaft.
Refer to Tech Bulletin 055 for instructions on removing pump from electric motor.
For warranty consideration contact Cat Pumps for the local Authorized Service Center. If you are uncertain as to the cause of failure (Pump or Motor), secure **Returned Goods Authorization number** and return complete assembly **PREPAID** to CAT PUMPS for evaluation.

The Pumps with Nine Lives

SF PLUNGER PUMP SERVICE MANUAL

2SF, 2SFX, CEE, SEEL MODELS:

2SF10, 2SF20, 2SF22,
2SF25, 2SF29, 2SF30, 2SF35
2SF05, 10, 15, 25, 29, 35SEEL

4SF MODELS:

4SF32ELS, 4SF40ELS, 4SF45ELS, 4SF50ELS,
4SF30GS1, 4SF35GS1, 4SF40GS1, 4SF45GS1,
4SF45GS118, 4SF50GS1

INSTALLATION AND START-UP INFORMATION

Optimum performance of the pump is dependent upon the entire liquid system and will be obtained only with the proper selection, installation of plumbing, and operation of the pump and accessories.

SPECIFICATIONS: Maximum specifications refer to individual attributes. It is **not** implied that **all maximums** can be performed **simultaneously**. If more than one maximum is considered, check with your CAT PUMPS supplier to confirm the proper performance and pump selection. Refer to individual pump Data Sheet for complete specifications, parts list and exploded view.

LUBRICATION: Fill crankcase with special CAT PUMP oil per pump specifications [2SF, 2SFX: prior 3/03-11.83 oz., after 3/03-10.15 oz., 4SF: 23.66 oz.]. DO NOT RUN PUMP WITHOUT OIL IN CRANKCASE. Change initial fill after 50 hours running period. Thereafter, change oil every **3 months or 500 hour intervals.**

MOTOR SELECTION: Identify the pump shaft size. (2SF) “ES” and “ELS” models have 5/8" electric shaft; “GES” models have 3/4" electric shaft; “GS” and “GZ” models have 3/4" gas shaft. (4SF) “ELS” models have 1-1/8" electric shaft; “GS” models have a 1" gas shaft. The motor or engine driving the pump must be of adequate horsepower to maintain full RPM when the pump is under load. Select the electric motor from the Horsepower Requirement Chart according to required pump discharge flow and maximum **pressure at the pump!** Consult the manufacturer of gas or diesel engine for selection of the proper engine.

MOUNTING: All 2SF and 4SF are direct drive and do not need to be mounted to another surface. Only the solid shaft 2SF22SLS with attachment brackets needs to be mounted to a rigid, horizontal surface. An uneven mounting surface will cause extensive damage to the pump base. Use the correct belt; make sure pulleys are aligned. Excessive belt tension may be harmful to the bearings. To minimize piping stress, **use appropriate flexible hose to inlet and discharge ports**. Before mounting pump to motor or gas engine, apply PN 6106 antiseize lubricant to pump shaft. Refer to Tech Bulletin 055 for instructions on removing pump from gas engine or electric motor.

LOCATION: If the pump is used in extremely dirty or humid conditions, it is recommended pump be enclosed. Do not store or operate in excessively high temperature areas or without proper ventilation.

INLET CONDITIONS: Refer to complete **Inlet Condition Check-List** in this manual before starting system. DO NOT STARVE THE PUMP OR RUN DRY. Temperatures above 130°F are permissible. Add 1/2 PSI inlet pressure per each degree F over 130°F. Elastomer or RPM changes may be required. See Tech Bulletin 002 or call CAT PUMPS for recommendations.

DISCHARGE CONDITIONS: OPEN ALL VALVES BEFORE STARTING SYSTEM to avoid deadhead overpressure condition and severe damage to the pump or system.

A **reliable Pressure Gauge** should be installed near the discharge outlet of the high pressure manifold. This is extremely important for adjusting pressure regulating devices and also for proper sizing of the nozzle or restricting orifice. The pump is rated for a maximum pressure; this is the **pressure** which would be **read at the discharge manifold of the pump**, NOT AT THE GUN OR NOZZLE.

Use PTFE thread tape or pipe thread sealant (sparingly) to connect accessories or plumbing. Exercise caution not to wrap tape beyond the last thread to avoid tape from becoming lodged in the pump or accessories. This condition will cause a malfunction of the pump or system.

All 2SF and 4SF Pumps come complete with a Pressure Regulating Unloader. NOTE: Except “CEE” and “SEEL” Models.

PRESSURE REGULATION: All systems require both a primary pressure regulating device (i.e., regulator, unloader) and a secondary pressure safety relief device (i.e., pop-off valve, safety valve). The primary pressure device must be installed on the discharge side of the pump. The function of the primary pressure regulating device is to protect the pump from over pressurization, which can be caused by a plugged or closed off discharge line. Over pressurization can severely damage the pump, other system components and can cause bodily harm. The secondary safety relief device must be installed between the primary device and pump. This will ensure pressure relief of the system if the primary regulating device fails. Failure to install such a safely device will void the warranty on the pump.

When the high pressure system is left running with the trigger gun off, the by-pass liquid can be routed to drain or to the pump inlet. If routed to the pump inlet, the **by-pass liquid can quickly develop excessive heat and result in damage to the pump.** A THERMO VALVE installed in the by-pass line is recommended to protect the pump. An AUTO SHUT-OFF ASSEMBLY may also be used.

NOZZLES: A worn nozzle will result in loss of pressure. Do not adjust pressure regulating device to compensate. Replace nozzle and reset regulating device to system pressure.

PUMPED LIQUIDS: Some liquids may require a **flush between operations or before storing.** For pumping liquids other than water, contact your CAT PUMPS supplier.

STORING: For extended storing or between use in cold climates, drain all pumped liquids from pump and **flush with antifreeze solution to prevent freezing and damage** to the pump. DO NOT RUN PUMP WITH FROZEN LIQUID (refer to Tech Bulletin 083).

⚠ WARNING

All systems require both a primary pressure regulating device (i.e., regulator, unloader) and a secondary pressure safety relief device (i.e., pop-off valve, safety valve). Failure to install such relief devices could result in personal injury or damage to the pump or to system components. CAT PUMPS does not assume any liability or responsibility for the operation of a customer’s high pressure system.

The Pumps with Nine Lives

PN 30036 Rev K 4364

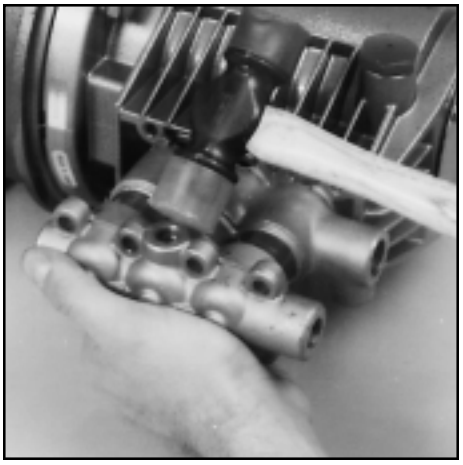

Removal of Discharge Manifold

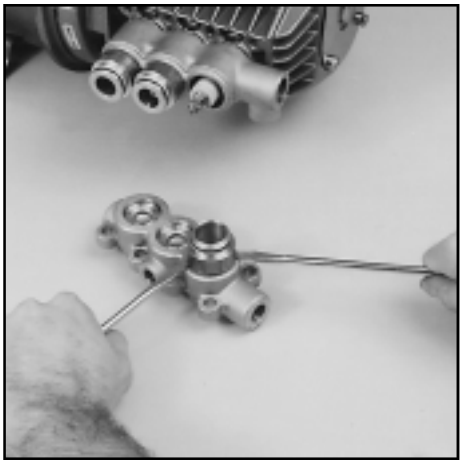

Removal of Adapter from Discharge Manifold

Removal of Adapter from Inlet Manifold

SERVICING THE VALVES

Disassembly of the Discharge Valve Assembly

1. Disconnect all plumbing and remove unloader for ease in servicing.

   NOTE: CEE and SEEL models do not come with standard unloader.

2. Inspect oil for proper level, presence of water or discoloration and replace as needed.
3. Using a standard M6 allen wrench remove the six (6) (2SF) or eight (8) (4SF) Socket Head Screws from the manifold. Remove the outer screws first, then the center screws.
4. Using a soft mallet tap the back side of the Discharge Manifold from alternate sides to maintain alignment and avoid damage to the plungers.
5. Grasp the Discharge Manifold from the from underside and gradually lift manifold while you pull away from the Crankcase.
6. The Adapter Spacers may stay with either the Discharge or Inlet Manifold. By inserting two opposing screwdrivers between Spacer and manifold you can easily pry them out of the Discharge Manifold. If they stay in the Inlet Manifold, gently work them up and down as you pull away from the Inlet Manifold.
7. The valve assemblies are in the Discharge Manifold ports and will fall out when manifold is turned over. A complete valve assembly includes: Retainer, Spring, Valve and Seat.

   NOTE: On “X” models the Adapter and Seat are one-piece.

   NOTE: The “GZ” models use the standard “SF” Valve Kit.

Discharge Valve Assembly (4SF)

Adapter and Discharge Valve Assembly (2SF)

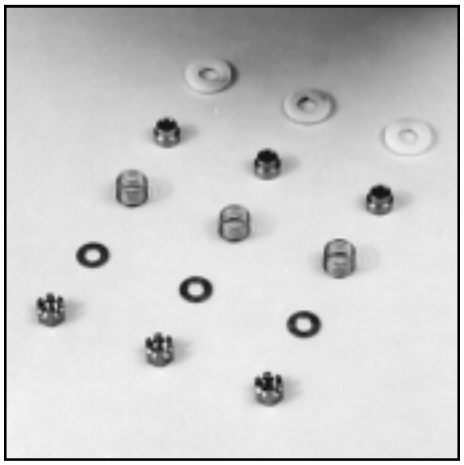

Inlet Valve Assembly

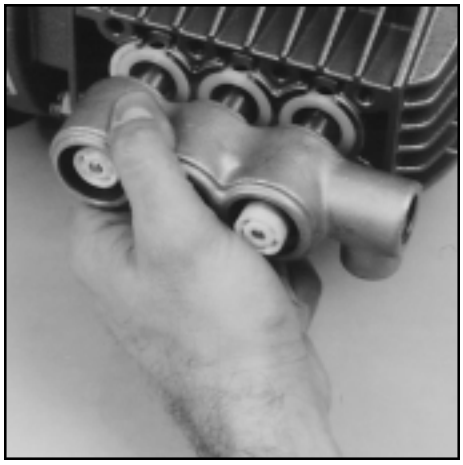

Removal of Inlet Manifold

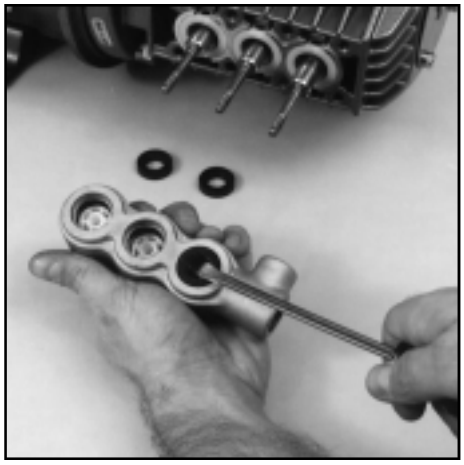

Removal of Lo-Pressure Seal

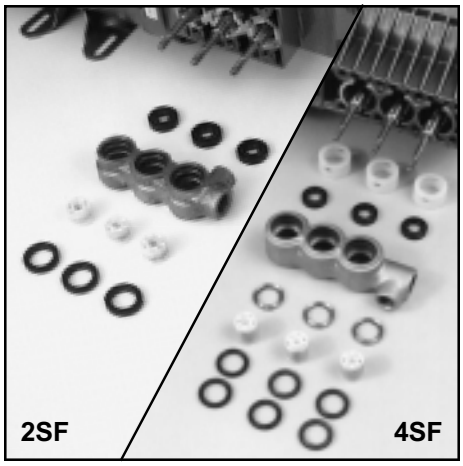

Plunger, Seals and V-Packing Arrangement

Reassembly of the Discharge Valve Assembly

1. Examine Adapter Spacer O-Rings and replace if worn. Lubricate and install O-Rings and Back-up-Rings **on both front and rear of the Adapter Spacer.**
2. Examine the Valve Retainers for scale buildup or wear and install into each Discharge Manifold port with tab down into the manifold chamber.
3. Replace worn or damaged Springs and place into Retainers.
4. Examine Valve and Seats for pitting, grooves or wear and replace as needed.
5. Place Valves over Springs with **concave side down.**
6. Place Valve Seats on Valves with **concave side down.**

   NOTE: On "X" Models, the Adapter and Seat are one-piece.
7. Lubricate O.D. of Adapter Spacer and insert **smaller I.D. into Discharge Manifold ports**. Snap into position. Exercise caution not to cut or pinch o-rings.
8. Carefully guide Discharge Manifold with Spacers over Plunger Rod ends and press into Inlet Manifold.
9. Replace Socket Head Screws and torque per chart. Use torque sequence chart.
10. If oil was not changed, be certain oil is to mark on Oil Gauge before resuming operation.

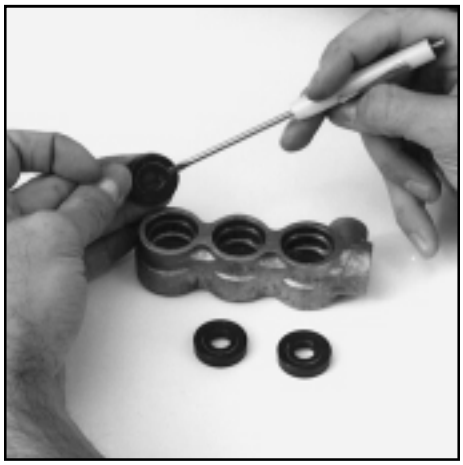

Installation of Lo-Pressure Seals

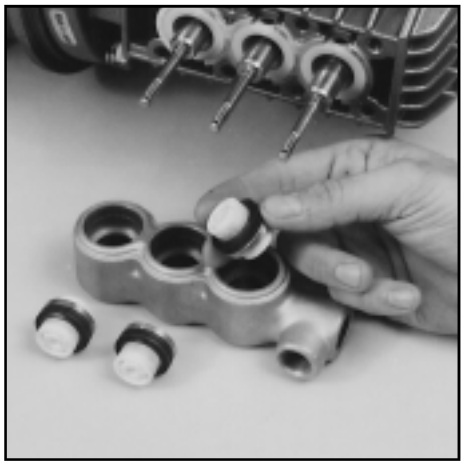

V-Packing Positioning

Installation of V-Packings

SERVICING THE SEALS

Disassembly of the Seal Assembly

1. Remove the Inlet Valve Assembly from the exposed plunger rod ends, including Cotterpin, Nut, Washer, Spring, Spacer and Inlet Valve.
2. Grasp the Inlet Manifold from the front and underside and pull to remove from Plunger Rods.
3. Carefully examine back side of Lo-Pressure Seal before removing from the Inlet Manifold as it will be damaged during removal. If worn, insert screwdriver into I. D. of seal and pry out from the backside of the I.M. Exercise caution to avoid damage to the Inlet Manifold.
4. Press ceramic Plunger with thumb or soft tool from **back side of Inlet Manifold.**

   On the Model 2SF the Hi-Pressure Seal may stay with the plungers or remain in the Inlet Manifold. If on the plungers, slide off by hand. If in the manifold, use a reverse pliers to remove.

   On the Model 4SF the V-Packing and Female Adapters may stay with the plungers or remain in Inlet Manifold. If on the plungers, slide off by hand. If in the manifold, use a reverse pliers to remove.
5. Remove Seal Retainers from Crankcase by grasping tab with pliers and pulling out.
6. Examine Crankcase Oil Seal to determine if Crankcase servicing is needed.
7. Examine Ceramic Plunger, Lo-Pressure Seals, V-Packings for scoring, cracks and wear and replace.

   NOTE: The "S" versions of the 4SF pumps have a replaceable Sleeve.
8. Examine the Sleeve for grooves for scale buildup and replace as needed. Grasp the Sleeve by hand and pull from the Plunger Rod.
9. Examine the O-Ring and Back-up-Ring under the Sleeve for cuts or wear and replace.
10. Examine the Barrier Slinger for wear and replace as needed. Install the Barrier Slinger with the concave side facing away from the Crankcase.

Reassembly of Seal Assembly

1. With Inlet and Discharge Manifold removed, examine Seal Retainers and replace if worn or damaged. Install on Plunger Rod and press into Crankcase **with tab out.**
2. Place Inlet Manifold on work surface with **Crankcase side up.**
3. Lubricate new Lo-Pressure Seals and press into position with **garter spring down.** Be certain the seal is seated squarely on the shoulder in the inlet manifold chamber.
4. Place Inlet Manifold on work surface with **Crankcase side down** (larger I.D. ports up)**.**
5. On the Model 4SF place new Female Adapter into Inlet Manifold chamber with **v-groove facing up.**
6. Carefully examine the Plungers for scoring or cracks and replace if worn.
7. On the Model 2SF lubricate Ceramic Plungers and new Hi-Pressure Seals. Press the plunger into the seal and position seal in middle of plunger.

   NOTE: Place the deeper recessed end of the plunger into the seal from the metal back side.

   NOTE: The "Hi-Temp" 2SF models use a special Hi-Pressure Seal and Hi-Temp Seal Kit.

   On the Model 4SF lubricate Ceramic Plungers and new V-Packings. Press Plunger into the V-Packings and position in the middle of plunger.

   NOTE: The deeper recessed end of the plunger should face the same direction as the v-groove on the V-Packing.
8. On the Model 4SF lubricate the Plunger Rod O-Ring to avoid cutting during installation. Install the Back-up-Ring first then the O-Ring into the groove on the Plunger Rod.
9. Install the Sleeve with the tapered end facing out. Gently press towards the Plunger Rod shoulder until flush with the Barrier Slinger.
10. Carefully install Inlet Manifold over Plunger Rod ends and slowly press into Crankcase.
11. Install the Plungers onto the plunger rods. Press into position using the **larger I.D. end of Valve Spacer.**

12. Examine Inlet Valve and replace if worn. **Inlet valves cannot be reversed if worn.** The S.S. Inlet Valves may be lapped if not badly worn. Install the S.S. Inlet valves with **square edges towards the plungers** (round edges towards the discharge). Install the Nylon Inlet Valve with **ridged side towards the discharge**.

    NOTE: The "Hi-Temp" 2SF models use a Nylon Inlet Valve (order individual parts, not standard Inlet Valve Kit).

13. Examine Spacers for wear and replace as needed. Install Spacer on each Plunger Rod with **smaller O.D. towards inlet valve**.
14. Examine Springs for damage or fatigue and replace as needed. Place on Plunger Rods.
15. Install Washers next with **concave side towards Inlet Manifold.**
16. Install Nuts and torque per chart.
17. On 2SF and 4SF models **always install new Cotterpins** and turn ends to secure in position.

    NOTE: "X" and S.S. Models do not use Cotterpins.

18. Refer to steps 7-10 under Servicing Valves-Reassembly to replace the Discharge Manifold.

2SF Torque Sequence

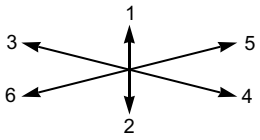

4SF Torque Sequence

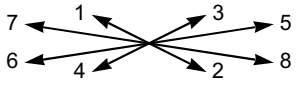

Torque diagonally in order shown. The outer four (4) screws then center screws all hand tight. Then repeat series to specifications in torque chart.

SERVICING THE CRANKCASE SECTION

1. While Inlet Manifold, Plungers and Seal Retainers are removed, examine Crankcase Seals for wear.
2. Check oil level and for evidence of water in oil.
3. Rotate Crankshaft by hand to feel for smooth bearing movement.
4. Examine Crankshaft Oil Seal externally for drying, cracking or leaking.
5. Consult CAT PUMPS or your local distributor if Crankcase service is required.

    See section VIII of the Plunger Pump Service Video for additional information.

PREVENTATIVE MAINTENANCE CHECK-LIST

Check	Daily	Weekly	50 hrs.	500 hrs.*	1500 hrs.**	3000 hrs.**
Clean Filters	x					
Oil Level/Quality	x					
Oil Leaks	x					
Water Leaks	x					
Belts, Pulley		x				
Plumbing		x				
Initial Oil Change			x			
Oil Change				x		
Seal Change					x	
Valve Change						x
Accessories					x	

* If other than CAT PUMPS special multi-viscosity ISO68 oil is used, change cycle should be every 300 hours.

** Each system's maintenance cycle will be exclusive. If system performance decreases, check immediately. If no wear at 1500 hours, check again at 2000 hours and each 500 hours until wear is observed. Valves typically require changing every other seal change.

Duty cycle, temperature, quality of pumped liquid and inlet feed conditions all effect the life of pump wear parts and service cycle.

** Remember to service the regulator/unloader at each seal servicing and check all system accessories and connections before resuming operation. Refer to video for additional assistance.

TORQUE CHART

Pump Item	Thread	Tool Size [Part No.]	Torque in. lbs.	ft. lbs.	Nm
Outer Bearing Case Screw	M6	M10 Hex/Phil. [25082]	50	4.0	6
Inner Bearing Case Screw	M6	M10 Hex/Phil. [25082]	50	4.0	6
Manifold Screw	M8	M6 Allen [30941]	115	9.4	13
Plunger Rod Nut	M6	M10 Hex [25082]	55	4.4	6
Bubble Oil Gauge	M28	Oil Gauge Tool [44050]	45	3.6	5
Mounting 2SF					
Adapter Plate to Gas Engine	5/16-24	1/2" Hex	90	7.2	10
Pump to Adapter Plate	3/8-16	9/16" Hex	110	9.0	12
Pump to Electric Motor	3/8-16	9/16" Hex	110	9.0	12
Mounting 4SF					
Adapter Plate to Gas Engine	3/8-16	9/16" Hex	110	9.0	12
Pump to Adapter Plate	1/2-13	3/4" Hex	150	12.5	17
Pump to Electric Motor	1/2-13	3/4" Hex	150	12.5	17

TECHNICAL BULLETIN REFERENCE CHART

No.	Subject	Models
002	Inlet Pressure VS Liquid Temperature	All Models
024	Lubrication of Lo-Pressure Seals	All Models
043	LPS and HPS Servicing	All Plunger Models
055	Removing Pumps from Gas Engine or Electric Motor	2SF, 2SFX, 2DX, 4SF, 5DX, 6DX
057	Set Screw and Hardened Key	4SF
064	By-Pass Hose Sizing	All Unloaders/Regulators
065	Higher Performance Ratings	2SF and 4SF
070	Maximum Performance	2SF and 4SF
073	Hi-Temp HPS	3PFR, 5PFR, 2SF
074	Torque Chart	Piston and Plunger Pumps
075	Sleeved Plunger Rod	4SF"S"
083	Winterizing a Pump	All Models
091	2SF Inlet Valve	2SF Models
092	Crankcase Changes	All 2SF-2SFX

INLET CONDITION CHECK-LIST

Review Before Start-Up

Inadequate inlet conditions can cause serious malfunctions in the best designed pump. Surprisingly, the simplest of things can cause the most severe problems or go unnoticed to the unfamiliar or untrained eye. REVIEW THIS CHECK-LIST BEFORE OPERATION OF ANY SYSTEM. Remember, no two systems are alike, so there can be no **ONE** best way to set-up a system. All factors must be carefully considered.

INLET SUPPLY should be adequate to accommodate the maximum flow being delivered by the pump.

- ❑ Open inlet shut-off valve and turn on water supply to avoid cavitating pump. **DO NOT RUN PUMP DRY.**
- ❑ Temperatures above 130°F are permissible. Add 1/2 PSI inlet pressure per each degree F over 130°F. Elastomer or RPM changes may be required. See Tech Bulletin 002 or call CAT PUMPS for recommendations.
- ❑ Avoid closed loop systems without a Thermo Valve high temperature protection.
- ❑ Avoid low vapor pressure and high viscosity liquids.
- ❑ Higher temperature liquids tend to vaporize and require positive heads.
- ❑ When using an inlet supply reservoir, size it to provide adequate liquid to accommodate the maximum output of the pump, generally a minimum of 6-10 times the GPM (however, a combination of system factors can change this requirement); provide adequate baffling in the tank to eliminate air bubbles and turbulence; install diffusers on all return lines to the tank.

INLET LINE SIZE should be adequate to avoid starving the pump.

- ❑ Line size must be a minimum of one size larger than the pump inlet fitting. Avoid thick walled fittings, tees, 90 degree elbows or valves in the inlet line of the pump to reduce the risk of flow restriction and cavitation.
- ❑ The line MUST be a FLEXIBLE hose, NOT a rigid pipe, and reinforced on SUCTION systems to avoid collapsing.
- ❑ The simpler the inlet plumbing the less the potential for problems. Keep the length to a minimum, the number of elbows and joints to a minimum (ideally no elbows) and the inlet accessories to a minimum.
- ❑ Use pipe sealant to assure air-tight, positive sealing pipe joints.

INLET PRESSURE should fall within the specifications of the pump.

- ❑ Optimum pump performance is obtained with +20 PSI (1.4 BAR) inlet pressure. With adequate inlet plumbing, most pumps will perform with flooded suction. Maximum inlet pressure is 75 PSI (5.25 BAR).
- ❑ After prolonged storage, pump should be purged of air to facilitate priming. Disconnect any discharge port and allow liquid to pass through pump.

INLET ACCESSORIES are designed to protect against over pressurization, control inlet flow, contamination or temperature and provide ease of servicing.

- ❑ A shut-off valve is recommended to facilitate maintenance.
- ❑ A stand pipe can be used in some applications to help maintain a positive head in the inlet line.
- ❑ Inspect and clean inlet filters on a regular schedule.
- ❑ A pressure gauge is recommended to monitor the inlet pressure and should be mounted AS CLOSE TO THE PUMP INLET as possible. **Short term,intermittent cavitation will not register on a standard gauge.**
- ❑ All accessories should be sized to avoid restricting the inlet flow.
- ❑ All accessories should be compatible with the solution being pumped to prevent premature failure or malfunction.

BY-PASS TO INLET Care should be exercised when deciding the method of by-pass from control valves.

- ❑ It is recommended the by-pass be directed to a baffled reservoir tank, with at least one baffle between the by-pass line and the inlet line to the pump.
- ❑ The 2SF and 4SF come standard with a Regulating Unloader to handle by-pass liquid directed to the inlet line of the pump. If other than standard valve is used, exercise caution to use proper flexible hose and adequate diameter. A PRESSURE REDUCING VALVE may be needed on the inlet line (**BETWEEN** THE BY-PASS CONNECTION AND THE INLET TO THE PUMP) to avoid excessive pressure to the inlet of the pump. It may also be necessary to use a THERMO VALVE in the by-pass line to monitor the temperature build-up in the by-pass loop to avoid premature seal failure.
- ❑ A low-pressure, **FLEXIBLE CLOTH BRAID** (not metal braid) hose should be used from the by-pass connection to the inlet of the pump.
- ❑ If standard unloader valve is not used, check the pressure in the by-pass line to avoid over pressurizing the inlet.

HOSE FRICTION LOSS

Water* Flow Gal/Min	PRESSURE DROP IN PSI PER 100 FT OF HOSE WITH TYPICAL WATER FLOW RATES — Hose Inside Diameters, Inches						
	1/4	5/16	3/8	1/2	5/8	3/4	1"
0.5	16	5	2				
1	54	20	7	2			
2	180	60	25	6	2		
3	380	120	50	13	4	2	
4		220	90	24	7	3	
5		320	130	34	10	4	
6			220	52	16	7	1
8			300	80	25	10	2
10			450	120	38	14	3
15			900	250	80	30	7
20			1600	400	121	50	12
25				650	200	76	19
30					250	96	24
40					410	162	42
50					600	235	62
60						370	93

*At a fixed flow rate with a given size hose, the pressure drop across a given hose length will be directly proportional. A 50 ft. hose will exhibit one-half the pressure drop of a 100 ft. hose. Above values shown are valid at all pressure levels.

WATER LINE PRESSURE LOSS

PRESSURE DROP IN PSI PER 100 FEET

Water GPM	Steel Pipe—Nominal Dia. 1/4	3/8	1/2	3/4	1	1¼	1½	Brass Pipe—Nominal Dia. 1/4	3/8	1/2	3/4	1	1¼	1½	Copper Tubing O.D. Type L 1/4	3/8	1/2	5/8	3/4	7/8
1	8.5	1.9						6.0	1.6						120	13	2.9	1.0		
2	30	7.0	2.1					20	5.6	1.8					400	45	10	3.4	1.3	
3	60	14	4.5	1.1				40	11	3.6						94	20	6.7	2.6	
5	150	36	12	2.8				100	28	9.0	2.2					230	50	17	6.1	3.0
8	330	86	28	6.7	1.9			220	62	21	5.2	1.6				500	120	40	15	6.5
10	520	130	43	10	3.0			320	90	30	7.8	2.4					180	56	22	10
15		270	90	21	6.2	1.6			190	62	16	5.0	1.5					120	44	20
25		670	240	56	16	4.2	2.0		470	150	40	12	3.8	1.7				330	110	50
40					66	17	8.0					39	11	5.0				550	200	88
60						37	17						23	11						
80						52	29						40	19						
100					210	107	48						61	28						

RESISTANCE OF VALVES AND FITTINGS

Nominal Pipe Size Inches	Inside Diameter Inches	Equivalent Length of Standard Pipe in Feet: Gate Valve	Globe Valve	Angle Valve	45˚ Elbow	90˚ Elbow	180˚ Close Ret	Tee Thru Run	Tee Thru Branch
1/2	**0.622**	0.41	18.5	9.3	0.78	1.67	3.71	0.93	3.33
3/4	**0.824**	0.54	24.5	12.3	1.03	2.21	4.90	1.23	4.41
1	**1.049**	0.69	31.2	15.6	1.31	2.81	6.25	1.56	5.62
1¼	**1.380**	0.90	41.0	20.5	1.73	3.70	8.22	2.06	7.40
1½	**1.610**	1.05	48.0	24.0	2.15	4.31	9.59	2.40	8.63
2	**2.067**	1.35	61.5	30.8	2.59	5.55	12.30	3.08	11.60
2½	**2.469**	1.62	73.5	36.8	3.09	6.61	14.70	3.68	13.20
3	**3.068**	2.01	91.5	45.8	3.84	8.23	18.20	4.57	16.40
4	**4.026**	2.64	120.0	60.0	5.03	10.80	23.90	6.00	21.60

Arriving at a total line pressure loss, consideration should then be given to pressure loss created by valves, fittings and elevation of lines.

If a sufficient number of valves and fittings are incorporated in the system to materially affect the total line loss, add to the total line length, the equivalent length of line of each valve or fitting.

TYPICAL RESERVOIR TANK

RECOMMENDED 6 TO 10 TIMES SYSTEM CAPACITY

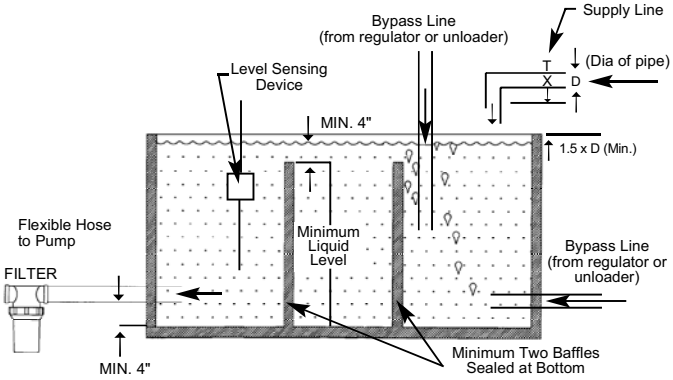

Handy Formulas to Help You

Q. **How can I find the RPM needed to get specific GPM (Gallons Per Minute) I want?**

A. Desired RPM = Desired GPM x $\frac{\text{Rated RPM}}{\text{Rated GPM}}$

Q. **I have to run my pump at a certain RPM. How do I figure the GPM I'll get?**

A. Desired GPM = Desired RPM x $\frac{\text{Rated GPM}}{\text{Rated RPM}}$

Q. **Is there a simple way to find the approximate horsepower I'll need to run the pump?**

A. Electric Brake Horsepower Required = $\frac{\text{GPM x PSI}}{1460}$ (Standard 85% Mech. Efficiency)

Q. **What size motor pulley should I use?**

A. Pump Pulley (Outer Diameter) x $\frac{\text{Pump RPM}}{\text{Motor/Engine RPM}}$ (Consult Engine Mfr.)

Q. **How do I calculate the torque for my hydraulic drive system?**

A. Torque (ft. lbs.) = 3.6 $\left(\frac{\text{GPM x PSI}}{\text{RPM}}\right)$

Avoid Cavitation Damage

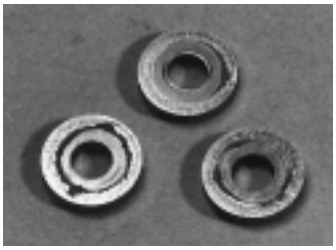

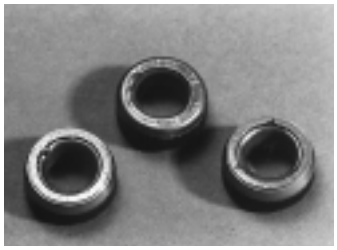

One or several of the conditions shown in the chart below may contribute to cavitation in a system resulting in premature wear, system downtime and unnecessary operating costs.

CONDITION	SOLUTION
Inadequate inlet line size	• Increase line size to the inlet port or one size larger
Water hammering liquid acceleration/ deacceleration	• Install C.A.T. Tube • Move pump closer to liquid supply
Rigid Inlet Plumbing	• Use flexible wire reinforced hose to absorb pulsation and pressure spikes
Excessive Elbows in Inlet Plumbing	• Keep elbows to a minimum and less than 90°
Excessive Liquid Temperature	• Use Thermo Valve in bypass line • Do not exceed pump temperature specifications • Substitute closed loop with baffled holding tank • Adequately size tank for frequent or high volume bypass • **Pressure feed high temperature liquids** • Properly ventilate cabinets and rooms
Air Leaks in Plumbing	• Check all connections • Use PTFE thread tape or pipe thread sealant
Agitation in Supply Tank	• Size tank according to pump output — **Minimum 6-10 times system GPM** • Baffle tank to purge air from liquid and separate inlet from discharge
High Viscosity Liquids	• Verify viscosity against pump specifications before operation • Elevate liquid temperature enough to reduce viscosity • Lower RPM of pump • Pressure feed pump • Increase inlet line size
Clogged Filters	• Perform regular maintenance or use clean filters to monitor buildup • Use adequate mesh size for liquid and pump specifications

DIAGNOSIS AND MAINTENANCE

One of the most important steps in a high pressure system is to establish a regular maintenance program. This will vary slightly with each system and is determined by various elements such as the duty cycle, the liquid being pumped, the actual specifications vs rated specifications of the pump, the ambient conditions, the inlet conditions and the accessories in the system. A careful review of the necessary inlet conditions and protection devices required before the system is installed will eliminate many potential problems.

CAT PUMPS are very easy pumps to service and require far less frequent service than most pumps. Typically, only common tools are required, making in-field service convenient, however, there are a few custom tools, special to certain models, that do simplify the process. This service manual is designed to assist you with the disassembly and reassembly of your pump. The following guide will assist in determining the cause and remedy to various operating conditions. You can also review our **FAQ** or **SERVICE** sections on our **WEB SITE** for more facts or contact CAT PUMPS directly.

PROBLEM	PROBABLE CAUSE	SOLUTION
Low pressure	•Worn nozzle.	•Replace with properly sized nozzle.
	•Belt slippage.	•Tighten belt(s) or install new belt(s).
	•Air leak in inlet plumbing.	•Tighten fittings and hoses. Use PTFE liquid or tape.
	•Pressure gauge inoperative or not registering accurately.	•Check with new gauge. Replace worn or damaged gauge.
	•Relief valve stuck, partially plugged or improperly adjusted.	•Clean/adjust relief valve. Replace worn seats/valves and o-rings.
	•Inlet suction strainer (filter) clogged or improperly sized.	•Clean filter. Use adequate size filter. Check more frequently.
	•Abrasives in pumped liquid.	•Install proper filter.
	•Leaky discharge hose.	•Replace discharge hose with proper rating for system.
	•Inadequate liquid supply.	•Pressurize inlet and install C.A.T.
	•Severe cavitation.	•Check inlet conditions.
	•Worn seals.	•Install new seal kit. Increase frequency of service.
	•Worn or dirty inlet/discharge valves.	•Clean inlet/discharge valves or install new valve kit.
Pulsation	•Faulty Pulsation Dampener.	•Check precharge. If low, recharge, or install a new dampener.
	•Foreign material trapped in inlet/discharge valves.	•Clean inlet/discharge valves or install new valve kit.
Water leak		
•Under the manifold	•Worn V-Packings, Hi-Pressure or Lo-Pressure Seals.	•Install new seal kit. Increase frequency of service.
	•Worn adapter spacer o-rings.	•Install new o-rings.
•Into the crankcase	•Humid air condensing into water inside the crankcase.	•Install oil cap protector. Change oil every 3 months or 500 hours.
	•Excessive wear to seals and V-Packings.	•Install new seal kit. Increase frequency of service.
Knocking noise		
•Inlet supply	•Inadequate inlet liquid supply.	•Check liquid supply. Increase line size, pressurize or install C.A.T.
•Bearing	•Broken or worn bearing.	•Replace bearing.
•Pulley	•Loose pulley on crankshaft	•Check key and tighten set screw.
Oil leak		
•Crankcase oil seals.	•Worn crankcase oil seals.	•Replace crankcase oil seals.
•Crankshaft oil seals and o-rings.	•Worn crankshaft oil seals or o-rings on bearing cover.	•Remove bearing cover and replace o-rings and/or oil seals.
•Drain plug	•Loose drain plug or worn drain plug o-ring.	•Tighten drain plug or replace o-ring.
•Bubble gauge	•Loose bubble gauge or worn bubble gauge gasket.	•Tighten bubble gauge or replace gasket.
•Rear cover	•Loose rear cover or worn rear cover o-ring.	•Tighten rear cover or replace o-ring.
•Filler cap	•Loose filler cap or excessive oil in crankcase.	•Tighten filler cap. Fill crankcase to specified capacity.
Pump runs extremely rough		
•Inlet conditions	•Restricted inlet or air entering the inlet plumbing	•Correct inlet size plumbing. Check for air tight seal.
•Pump valves	•Stuck inlet/discharge valves.	•Clean out foreign material or install new valve kit.
•Pump seals	•Leaking V-Packings, Hi-Pressure or Lo-Pressure seals.	•Install new seal kit. Increase frequency of service.
Premature seal failure	•Scored plungers.	•Replace plungers.
	•Over pressure to inlet manifold.	•Reduce inlet pressure per specifications.
	•Abrasive material in the liquid being pumped.	•Install proper filtration at pump inlet and clean regularly.
	•Excessive pressure and/or temperature of pumped liquid.	•Check pressure and inlet liquid temperature.
	•Running pump dry.	•DO NOT RUN PUMP WITHOUT LIQUID.
	•Starving pump of adequate liquid.	•Increase hose one size larger than inlet port size. Pressurize and install C.A.T.
	•Eroded manifold.	•Replace manifold. Check liquid compatibility.

PRICE BOOSTER PUMP

Price® Pump Co.

INSTALLATION, OPERATING AND MAINTENANCE MANUAL

TYPE HP CENTRIFUGAL PUMPS

MODELS: HP75 CN/CS, BN/BS, KN/KS, NN
HP75 SS/SC, AB
HP100 SS/SC, AB

PLEASE FILL IN FROM PUMP NAMEPLATE

Pump Model_____

BOM. No._____

Serial No._____

RETAIN MANUAL FOR REFERENCE

Congratulations

You are now the owner of a Price® Pump Co. Centrifugal Pump. This pump was carefully inspected and subjected to final performance evaluation before being released for shipment. In order to achieve maximum performance and reliability, please follow the simple instructions in this manual.

RECOMMENDED PRECAUTIONS

1. For satisfactory operation and safety, maximum system pressure must not exceed 350 psi* (24.6kg/sq cm).

2. For satisfactory operation and safety, maximum fluid temperature must not exceed 300°F* (121°C).

3. No modifications, additions or deletions should be made to the pump without prior approval of the factory.

4. Drain pump completely and flush with water before servicing a pump handling volatile or harmful liquids.

READ CAREFULLY THE CAUTION BELOW

The performance of your Price® Pump Co. Centrifugal Pump is based on clean, room temperature, water with suction conditions as shown on the performance curves. If used to pump liquids other than water , pump performance may differ from rated performance based on the different specific gravity, temperature, viscosity, etc. of the liquid being pumped. A standard pump, however, may not be safe for pumping all types of liquids, such as toxic, volatile or chemical liquids, or liquids under extreme temperatures or pressures.

Please consult Price® Pump Co. technical specifications as well as local codes and general references to determine the appropriate pump for your particular application. Since it is impossible for us to anticipate every application of a Price® Centrifugal pump, if you plan to use the pump for a non-water application, contact Price® Pump Co. beforehand to determine whether such application may be appropriate and safe under the operating conditions. Failure to do so could result in property damage or personal harm.

***** Depends on seal materials and seal type

Visit our website for product information and technical support

INSTALLATION / OPERATING INSTRUCTIONS
CENTRIFUGAL PUMPS

Warning

Before installing, repairing or performing maintenance on this pump, read these instructions completely.

Disconnect power to pump before servicing to avoid dangerous or fatal electrical shock.

Match supply voltage and frequency to motor nameplate values. Incorrect voltage can cause fire or serious motor damage and void warranty.

Ground motor before connection to electrical power supply! Failure to ground motor can cause severe or fatal electrical shock!

Do not ground to gas supply line!

Before disassembling pump, be certain all liquid has been removed. If pump was used to pump hazardous or toxic fluid, it must be decontaminated prior to disassembly.

Close Coupled Motor Pumps

It is suggested that these pumps be firmly bolted to a level surface. Adequate air movement around motor will help prevent overheating.

Do not over tighten inlet and outlet piping or volute may be damaged.

Power Frame Mounted Pumps

Power Frame mounted pumps must be mounted on a rigid base that will not warp or flex. Each pump must be mounted such that the pump shaft centerline is in-line with the driver shaft centerline. Pads and/or shims will be required on the pump, the driver or both to insure proper alignment. The two shafts should not touch each other (end to end) and the distance between them depends on the coupling used to connect them.

Misalignment will cause vibration, bearing failure and void warranty. Pumps are rough aligned at the factory but must be realigned after shipment and installation.

Pulley driven pump must have pulleys inline and proper belt tightness practices followed.

Direction of Rotation

Note: Motor shaft rotation is viewed from the suction end of pump. A rotational arrow is shown on the front of the pump volute casing. Incorrect rotation can cause pump damage, failure or reduced performance, voiding warranty. It is best to check rotation by momentarily energizing or jogging the motor prior to filling pump with liquid.

Warning! Do not operate pump without liquid as damage may result to the pump internal wear surfaces.

Plumbing

All piping needs to be supported independently of the pump. Piping connections should not exert any stress on the pump volute or fittings.

Suction Piping (Inlet)

(Horizontal Pumps)

Suction line must provide adequate suction pressure and even (Laminar) liquid flow for proper pump operation. Air, entrapped in the suction line due to leaks or improper piping design, may cause the pump to lose prime. Non-priming pumps must have their suction 'flooded' at start up (see datasheets for minimum NPSHR). Also, the suction line must provide sufficient pressure (NPSH) and even flow to pump inlet to prevent pump cavitation. The suction pipe entering the pump should be straight and a minimum length of 5 times and preferably 10 times the pump inlet diameter. Elbows, fittings or valves installed close to the pump inlet can disrupt liquid flow and cause cavitation. Suction lines must be at least the same diameter as the pump inlet or larger if possible.

Price Pump Company recommends against using foot valves in the suction line to maintain liquid in the pump when it's not operating. If foot valves are used, due to suction lift conditions, they must be properly maintained to avoid leaks resulting from wear or fouling. Suction piping must be designed to prevent vapor from being trapped in high spots in the piping. This condition may cause the pump to vapor lock.

Discharge Piping (Outlet)

To control flow and discharge head, it is advisable to install a valve (globe, ball, or other adjustable and non-leak type) in the discharge line adjacent to the pump. The valve may be closed during system repairs to prevent backflow. By installing a check valve in the discharge line, backflow can also be prevented during maintenance or during periods of pump stoppage.

Operation

All centrifugal pumps must be filled with liquid prior to start up. It is suggested that during initial start up the discharge valve be closed and then opened as the motor reaches full rpm's. If pump does not build up pressure as motor speed increases, shut down and make sure that liquid flow into pump is not restricted (see "Troubleshooting").

Note: A centrifugal pumps flow rate and head (pressure) will vary with the amount of resistance (pipe friction and flow restrictions) in the discharge line. As the valve on the discharge line opens, the flow rate and motor amperes draw will increase and head (pressure) will decrease. As the valve on the discharge line is closed, the flow rate and amperes draw will decrease and the head (pressure) will increase.

If resistance in the discharge line is not sufficient, the pump will operate at a condition of maximum flow, sometimes called "end of curve" performance. Maximum horse-power is required to operate at this point and motor overload may result. If excessive amperes draw and motor overload is occurring, reduce the system flow rate by installing a valve or orifice in the discharge line to control (restrict) the pumps flow rate. Alternatively, reduce pump head by trimming impeller to a smaller diameter.

Consult Price Pump or a local Price Pump distributor for assistance.

appsupport@pricepump.com

1. Pump fails to build head pressure:

Check for:

a. Pump not primed.

b. Incorrect pump rotation.

c. Driver speed too low.

d. Suction line restricted.

e. Driver failure.

f. Plugged or damaged impeller.

g. Pump or impeller undersized.

h. Pump cavitation.

i. Improper impeller clearance.

2. Pump fails to provide enough flow rate.

Check for:

a. System resistance too high.

b. Pump undersized.

c. Pump not primed.

d. Driver speed too low.

e. Poor suction conditions.

f. Improper impeller clearance.

3. Excessive noise or vibration during operation.

Check for:

a. Motor bearing failing.

b. Pump cavitation.

c. Improper impeller clearance.

4. Leaking mechanical seal.

Check for:

a. Improper assembly.

b. Worn or cracked seal faces.

c. Abrasive material in fluid.

d. Liquid flashing at seal faces (Fluid temperature too high).

e. Seal pressure rating too low for the service.

f. Chemical attack of seal components.

g. Seal operated dry or with a liquid having poor lubricating properties.

5. Pump gradually loses pressure and head.

Check for:

a. Increasing temperature causing cavitation or liquid vaporization.

b. Driver failure.

c. Suction lift too high.

d. Air entering suction line.

6. Motor overheating.

Check for:

a. Excessive flow and amp draw (Throttle discharge).

b. Low voltage or frequency.

c. Flow rate too low with resulting heat rise.

d. Bearing failure.

e. System temperature too high.

TYPE HP MAINTENANCE AND REPAIR

Before attempting any repairs under warranty, contact Distributor to obtain factory authorization. Repairs carried out without authorization may void warranty. Many causes of pump system failure are due to improper system design. Refer to the trouble shooting -list in this manual before carrying out pump inspection.

DISASSEMBLY

1. Disconnect power source to motor.

2. Disconnect electrical connections tagging wires carefully to preserve correct rotation. Loosen motor base.

3. Remove pump and motor assembly to repair area. Observe position of all parts prior to disassembly. (Note: Volute may be left in piping.)

4. Remove bolts and remove volute from pump.

5. Remove impeller. Unscrew CCW. (note: remove center cap from rear of motor, insert screwdriver to hold shaft while un -screwing impeller).

6. Remove seal head from motor shaft. Type 8 & 9: Loosen set screws and slide seal head off shaft.

7. Remove motor bolts and remove bracket from motor.

8. Remove seal seat from bracket using fingers.

REASSEMBLY

1. Clean seat cavity of the bracket thoroughly. (For Bell Gasket Design, assure that there are no cuts or tearing in the end bell gasket.)

2. Thoroughly clean pump shaft. Assure that the shaft is not grooved and that there is no evidence of pitting or fretting. Polish the shaft with extra fine emery cloth if needed. If the shaft is grooved, fretted or worn, replace the motor.

3. **For Type 6, 8, 9 and 21 seals:**

a. Place the bracket on a firm surface with the seat cavity (pump end) up. (For Bell Gasket Design, place new end bell gasket on bracket).

b. Install seal seat into seat cavity. (For Bell Gasket Design remove the rubber seat cup and discard). Evenly push seat into cavity with fingers. To help ensure the seat is not damaged place cardboard disk over the seat face then gently tap seat into place with a wooden dowel or plastic rod (1 -1/8" outside diameter).

T6 seal only:

a. Set seal on shaft with carbon facing ceramic seat. Do not push seal head past shoulder on shaft (note: when impeller is threaded onto motor shaft seal height will automatically be set.)

T21 only:

a. Lubricate shaft and elastomer with vegetable oil.

b. Install rotary seal head onto motor shaft and slide toward seat until carbon face touches seal seat.

c. Install seal spring and seal retainer.

T 8 & 9 only:

a. Install seal head onto pump shaft sliding gently past shoulder of shaft. Slide seal head toward seat until carbon face contacts ceramic seat.

b. Tighten seal head setscrews to pump shaft. Remove clips in seal head and discard.

4. Install impeller. Thread impeller onto shaft CW. (For st ainless steel / bronze impellers, apply L octite 242, For CPVC / Noryl impellers, apply L octite 248 or equivalent to the motor shaft before threading the impeller onto the motor shaft) Place screwdriver in motor shaft slot in rear of motor to hold while tightening impeller firmly. (For O-ring Design, install the O - ring on to the bracket face).

Note: For type 21: Ensure that the spring retainer does not slip between the shoulder of the shaft and the hub of the impeller.

5. Install volute and tighten bolts evenly (star pattern) to required torque.

Volute Bolt T orque Specifications

SS / Bronze - 10-12 ft/ lbs.
(13.5-16.3 Nm)

CPVC - 6 ft / lbs.
(9.5 Nm)

Noryl- 10 ft / lbs.
(13.5 Nm)

6. Rotate shaft by hand to make sure impeller does not rub against volute.

7. Ret urn pump to installation, reconnect electric connections.

8. Start pump momentarily to observe shaft rotation. If rotation corresponds to the rotation arrow pump may be put into service. If rotation is incorrect, switch any two leads on 3 -phase motors. Che ck the wiring diagram of motor for single phase rotation.

9. Prime pump thoroughly, making sure all air is purged.

10. Start pump allowing adequate time to purge any additional air from system. Observe any gauges, flow meters, etc. to verify that pump is performing properly.

HP75 CN/CS/NN

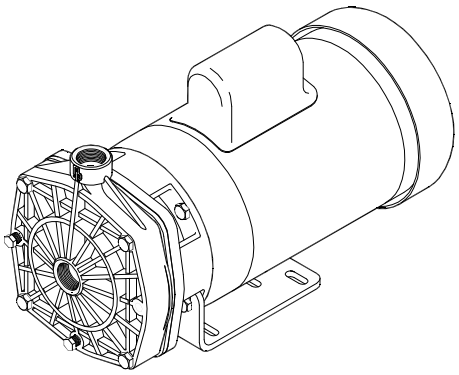

HP75 BN/BS/KN/KS/SS/SC/AB

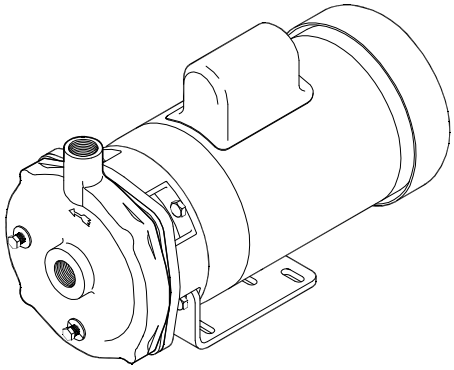

HP100 SS/AB

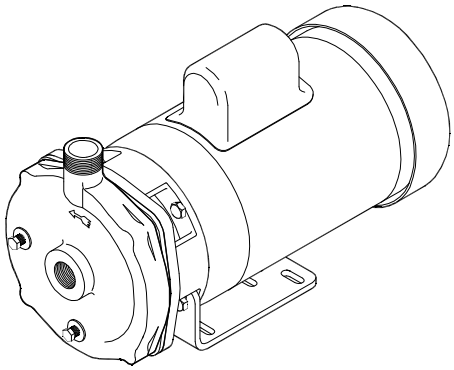

INSTALLING A PEO (PUMP END ONLY) STUB SHAFT PUMP

a. Place the bracket on a firm surface, loosen stub shaft setscrews and carefully remove shipping plug.

b. Place motor in an upright position with motor shaft pointing upward. Make sure motor shaft and end bell flange are free of burrs and surfaces are clean.

c. Align PEO stub shaft setscrews (if applicable) with motor shaft keyway and carefully slid the PEO onto the motor shaft until it sits firmly onto the motor end bell flange.

d. Oriented the PEO's discharge port or base to preferred motor configuration while referencing the motors electrical box position.

e. Install flange bolts and tighten. (Install pump base if applicable)

f. Reposition pump back onto motor base.

g. Refer to pump Reassembly Instructions and proceed to **setting the impeller clearance** (if applicable).

INSTALLING A PEO (PUMP END ONLY) NON-STUB SHAFT PUMP

a. Carefully un-pack all components received with your shipment and remove any shipping plugs.

b. Place the bracket on a firm surface with the seat cavity (pump end) up. Follow seal Installation / reassembly instructions contained within this manual.

c. Make sure motor shaft and motor end bell flange are free of burrs and surfaces are clean.

d. Carefully place the Bracket assembly over the motor shaft and align bracket with motor end bell flange.

e. Install impeller, gasket or o-ring, volute and volute mounting bolts.

f. Oriented the PEO's discharge port or base to preferred motor configuration while referencing the motors electrical box position.

g. Install motor flange bolts and tighten all bolts to proper torque. (Install pump base if applicable)

PRICE® PUMP CO.

HP75/HP100 (O-Ring Design) Parts List

Key #	Description	QTY.	HP75/100 SS&SC:	HP75/100 AB:	HP75 NN:
A.	Volute HP75	1	0241(A^1)	0229-0(A^1)	8300NN(A^3)
	Volute HP100	1	0241-2(A^2)	0229-2(A^2)	N/A
B.	1/8" Pipe Plug	2	0559(B^1)	0558(B^1)	8012BF(B^2) (1ea)
C.	Volute Bolts	4	0579(C^1)	0592(C^1)	0723(C^2)
D.	Washers	12	N/A	N/A	1137
E.	Volute Nuts	4	N/A	N/A	1138
F.	Impeller	1	0918SS-(dia.)	0918BR-(dia.)	N/A
	Impeller CPVC	1	0918-(dia.)	N/A	0918-(dia.)
G	Bracket	1	0238(SS)(G^1)	0242(BR)(G^1)	8019NN-1(G^2)
H^1.	T.21 Viton	1	0553 (std)	0553 (std)	0553
H^2.	T.8 Viton	1	2394-PU	2394-PU	N/A
H^2.	T.9 Teflon	1	1150	1150	N/A
H^3.	T.6 Buna	1	N/A	N/A	0118 (std)
J.	O-ring	1	3565	3565	0871
K.	Slinger	1	0515	0515	0515
L.	Base	1	0197	0197	0198
M.	Bolts, Motor				
	Upper	2	0579	0579	0588
	Lower	2	0724	0724	0673
N^1.	Motor	1	Specify P/N	Specify P/N	Specify P/N
N^2.	Power Frame	1	5479	5479	5479

HP75 / HP100 Repair Parts Kits (O-ring Design)

(Repair kits for SC pumps only)

P/N	Includes	P/N	Includes
0661SC-8	4.00" CPVC Imp., Viton O-ring, and Slinger	0661SC-3	5.25" CPVC Imp., Viton O-ring, and Slinger
0661SC-6	4.25" CPVC Imp., Viton O-ring, and Slinger	0661SC-2	5.50" CPVC Imp., Viton O-ring, and Slinger
0661SC-5	4.50" CPVC Imp., Viton O-ring, and Slinger	0661SC-1	5.75" CPVC Imp., Viton O-ring, and Slinger
0661SC-7	4.75" CPVC Imp., Viton O-ring, and Slinger	0661SC	6.00" CPVC Imp., Viton O-ring, and Slinger
0661SC-4	5.00" CPVC Imp., Viton O-ring, and Slinger		

Note: Seal/Seat must be ordered in addition to repair kit

Standard Pump Configurations

Model:	Volute Material:	Bracket Material:	Impeller Material:
SS	316SS	316SS	316SS
SC	316SS	316SS	CPVC
AB	Bronze	Bronze	Bronze
NN	Noryl	Noryl	CPVC

PRICE® PUMP CO.

HP75-100_(O-Ring)_P.dwg rev. B

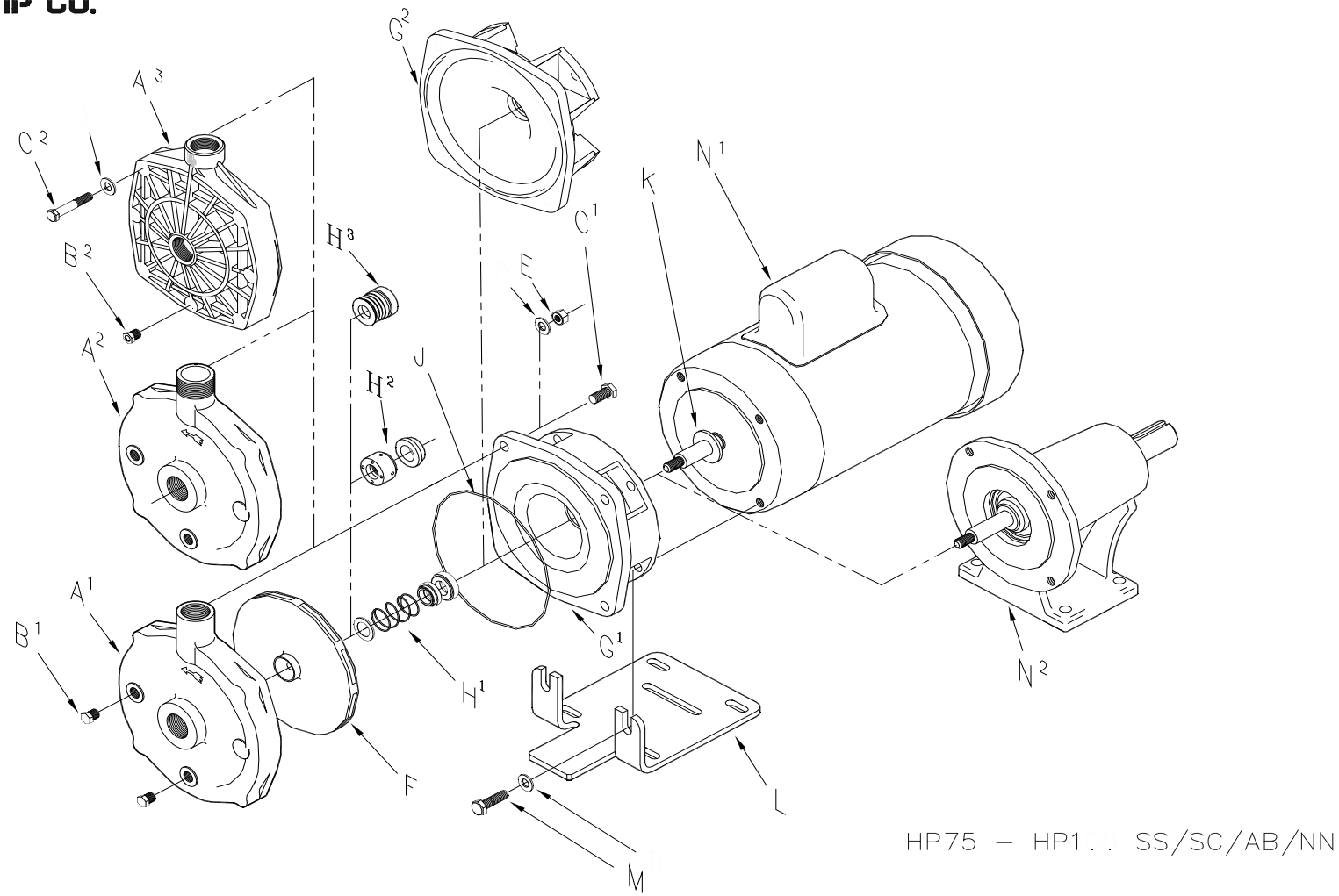

Price® Pump C..
21775 Eighth Street East * Sonoma, CA 95476-0329 * (707) 938-8441 * Fax (707) 938-0764

PRICE® PUMP CO.

HP75 (Gasket Design) Parts List

Key #	Description	QTY.	HP75 BN/BS:	HP75 KN/KS:	HP75 CN / CS:
A.	Volute	1	0229(A[1])	0229KP(A[1])	8300CP(A[2])
B.	1/8" Pipe Plug	2	0558(B[1])	0559(B[1])	8012PF(B[2]) (1ea.)
C.	Volute Bolts	4	0592(C[1])	0588(C[1])	1136(C[2])
D.	Washers	4	N/A	N/A	1137
E.	Volute Nuts	4	N/A	N/A	1138
F.	Impeller CPVC	1	0918-(Imp. Dia.)	0918-(Imp. Dia.)	0918-(Imp. Dia.)
	Impeller 316SS	1	0918SS-(Imp. Dia.)	0918SS-(Imp. Dia.)	0918SS-(Imp. Dia.)
G[1].	T.6 Buna (std)	1	0118	0118	0118
G[2].	T.21Viton	1	0553	0553	0553
H.	Gasket, EPDM	1	0232	0232	0232
J.	Bracket	1	0228	0228	0228
K.	Slinger	1	0515	0515	0515
L.	Base	1	0198	0198	0198
M.	Bolts, Motor				
	Upper	2	0588	0588	0588
	Lower	2	0673	0673	0673
N[1].	Motor	1	Specify P/N	Specify P/N	Specify P/N
N[2].	Power Frame	1	5479	5479	5479

HP75 Repair Parts Kits (Bell Gasket Design)

(Repair kits for BN, KN, & CN pumps only)

P/N	Includes	P/N	Includes
0661-8	4.00" CPVC Imp., EPR Gasket, and Slinger	0661-3	5.25" CPVC Imp., EPR Gasket, and Slinger
0661-6	4.25" CPVC Imp., EPR Gasket, and Slinger	0661-2	5.50" CPVC Imp., EPR Gasket, and Slinger
0661-5	4.50" CPVC Imp., EPR Gasket, and Slinger	0661-1	5.75" CPVC Imp., EPR Gasket, and Slinger
0661-7	4.75" CPVC Imp., EPR Gasket, and Slinger	0661	6.00" CPVC Imp., EPR Gasket, and Slinger
0661-4	5.00" CPVC Imp., EPR Gasket, and Slinger		

Note: Seal/Seat must be ordered in addition to repair kit .

Standard Pump Configurations

Model:	Volute Material:	Bracket Material:	Impeller Material:
BN	Bronze	Cast Iron	CPVC
KN	Kanigen	Cast Iron	CPVC
CN	CPVC	Cast Iron	CPVC
BS	Bronze	Cast Iron	316SS
KS	Kanigen	Cast Iron	316SS
CS	CPVC	Cast Iron	316SS

PRICE® PUMP CO.

HP75_(Gasket) _P.dwg rev. B

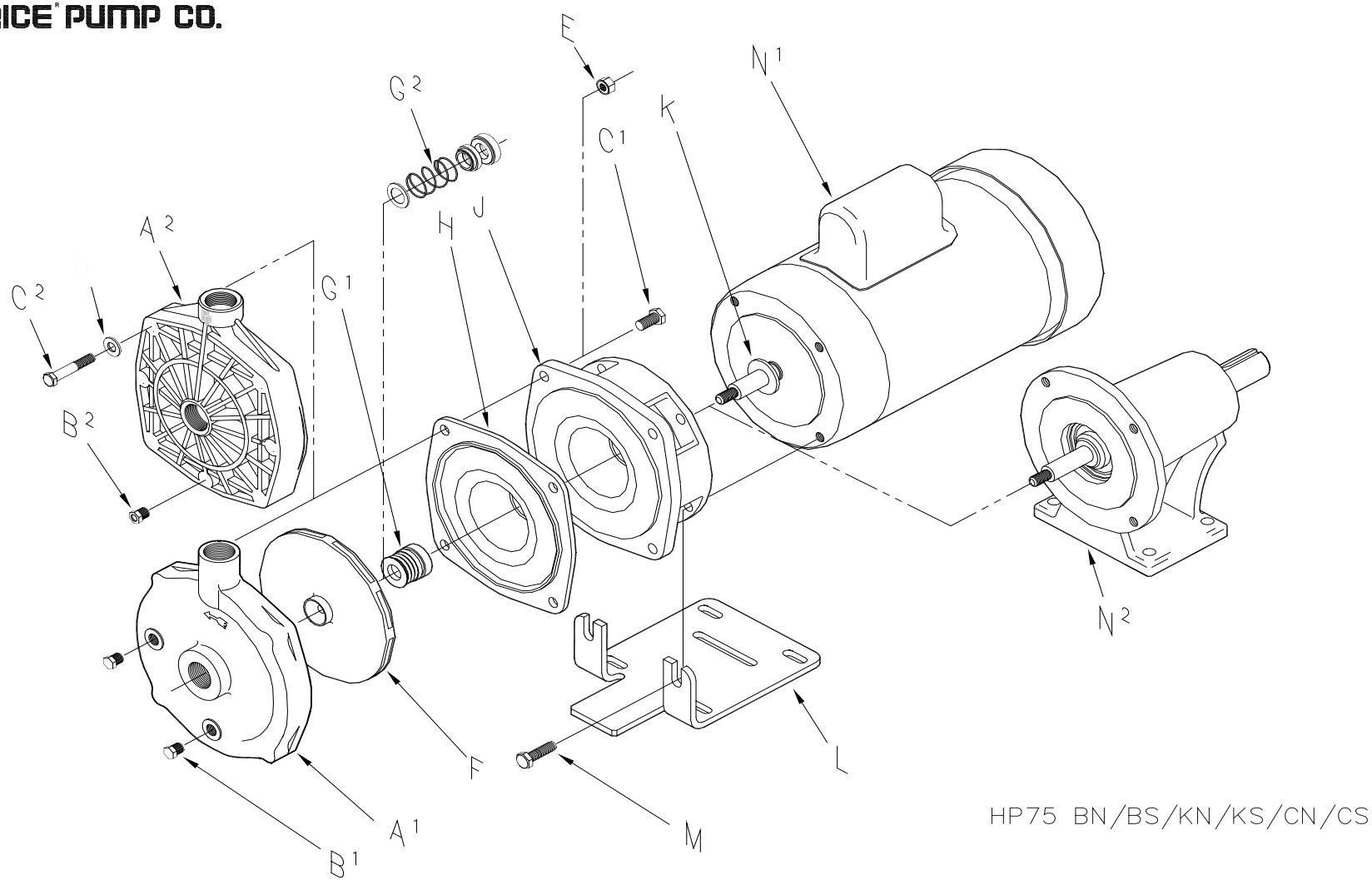

Price® Pump C..
21775 Eighth Street East * Sonoma, CA 95476-0329 * (707) 938-8441 * Fax (707) 938-0764

PRICE CENTRIFUGAL PUMP CAUTIONS & WARNINGS

- **CAUTION:** Price Pump centrifugal pumps must be operated above minimum flow rate to avoid damage.
- **CAUTION:** All Price Pump centrifugal pumps require the suction to be flooded.
- **CAUTION:** It is recommended that all piping connections to the pump be flexible.
- **WARNNING:** Verify chemical compatibility of the pump materials of construction with the fluid being pumped.
- **WARNNING:** Price centrifugal pumps are not designed for use in sanitary or food applications.
- **CAUTION:** Use only Price Pump original equipment factory replacement parts.
- **WARNNING:** Price pump fluid temperature limits must be observed. Maximum operating temperature is 300°F.
- **CAUTION:** The pump should be thoroughly flushed and drained before disassembly.
- **CAUTION:** For larger pump motor units, weight may exceed 65 1bs. (30 kg).

CAUTION: Maximum working pressure for seals:

- Type 6 Seal **75 PSI** (5.2 bar)
- Type 6A Seal **75 PSI** (5.2 bar)
- Type 8 Seal **325 PSI** (22.4 bar)
- Type 9 Seal **350 PSI** (24.1 bar)
- Type 21 Seal **150 PSI** (10.3 bar)
- Type 2106 Seal **150 PSI** (10.3 bar)

CAUTION: Maximum solid size by pump

- HP75 / MS50 **0.030"** (0.76mm)
- SP150 **0.060"** (1.50mm)
- LT25 **0.120"** (3.05mm)
- F50/75/95 **0.150"** (3.81mm)
- OH75 **0.150"** (3.81mm)
- CD100/150 **0.150"** (3.81mm)
- CL150 **0.150"** (3.81mm)
- RC200/300 **0.380"** (9.60mm)
- XJ-JB100 **0.120"** (3.05mm)
- XJ-JB150 **0.250"** (6.40mm)
- XJ-JB200 **0.440"** (11.2mm)
- XL-XT100 **0.120"** (3.05mm)
- XL-XT150 **0.250"** (6.40mm)
- XL-XT200 **0.440"** (11.2mm)

CAUTION: Minimum flow rate by pump

- HP75 / MS50 **0.5 GPM** (1.9 LPM)
- SP150 **10 GPM** (38 LPM)
- LT25 **0.5 GPM** (1.9 LPM)
- F50/75/95 **5.0 GPM** (19 LPM)
- OH75 **7.0 GPM** (26 LPM)
- CD100 **12 GPM** (45 LPM)
- CD150 **25 GPM** (94 LPM)
- CL150 **40 GPM** (150 LPM)
- RC200 **10 GPM** (38 LPM)
- RC300 **50 GPM** (189 LPM)
- XJ-JB150 **20 GPM** (75 LPM)
- XJ-JB150 **40 GPM** (150 LPM)
- XJ-JB200 **90 GPM** (340 LPM)
- XL-XT100 **10 GPM** (38 LPM)
- XL-XT150 **35 GPM** (132 LPM)
- XL-XT200 **50 GPM** (189 LPM)

GENERAL TERMS OF SALE

1. GENERAL

A. Seller's price is based on these sales terms and conditions. The agreement and inclusion of other or amended terms in this contract will result in a change (including increase) in Seller's price (as may be contained in any price books or quotations) to reflect such other or amended terms. This contract shall represent the final, complete and exclusive statement of the agreement between the parties and may not be modified, supplemented, explained or waived by parole evidence, any Terms and Conditions contained in Buyer's purchase order or request for quotation, any course of dealings between the parties, Seller's performance or delivery, or in any other way. The Terms and Conditions of this contract may only be modified or waived in a written document signed by an Officer of Seller. These terms are intended to cover all activity of Seller and Buyer hereunder, including sales and use of products, parts and work and all related matters (references to products include parts and references to work include construction, installation and start-up). Any reference by Seller to Buyer's specifications and similar requirements are only to describe the products and work covered hereby and no warranties or other terms therein shall have any force of effect. Any information provided by Seller including, but not limited to, suggestions as to specific equipment does not imply any guarantee of specific suitability and/or material compatibility in a particular application, since many factors outside the control of Seller may affect the suitability of products in a particular application. Catalogs, circulars, similar pamphlets and information contained on websites of the Seller are issued for general information purposes only and shall not be deemed to modify the provisions hereof.

B. The agreement formed hereby and the language herein shall be construed and enforced under the Uniform Commercial Code as in effect in the State of California on the date hereof.

2. TAXES

Any sales, use or other similar type taxes imposed on this sale or on this transaction and/or any import or export duties or fees as may be assessed or imposed on or as a result of deliveries under this transaction are not included in the price. Such taxes shall be billed separately to the Buyer. Seller will accept a valid exemption certificate from the Buyer if applicable; however, if an exemption certificate previously accepted is not recognized by the governmental taxing authority involved and the Seller is required to pay the tax covered by such exemption certificate. Buyer agrees to promptly reimburse Seller for the taxes paid.

3. PERFORMANCE, INSPECTION AND ACCEPTANCE

A. Unless Seller specifically assumes installation, construction or start-up responsibility, all products shall be finally inspected and accepted within thirty (30) days after arrival at point of delivery. Where seller has responsibility for installation, construction or start-up all work shall be finally inspected and accepted with thirty (30) days after completion of the applicable work by Seller. All claims whatsoever by Buyer, (including claims for shortages) except only those provided for under the WARRANTY AND LIMITATION OF LIABILITY and PATENTS Clauses, hereof, must be asserted in writing by Buyer within said thirty (30) day period or they are waived. If this contract involves partial performance, all such claims must be asserted within said thirty- (30) day period for each partial performance. There shall be no revocation of acceptance. Rejection may be only for defects substantially impairing the value of products or work and Buyer's remedy for lesser defects shall be those provided for under the WARRANTY AND LIMITATION OF LIABILITY Clause.

B. Seller shall not be responsible for non-performance or for delays in performance occasioned by any causes beyond Seller's reasonable control, including, by way of example and not limitation, to labor difficulties, delays of vendors or carriers, fires, governmental actions, or shortages of material, components, labor, or manufacturing facilities. Any delays so occasioned shall affect a corresponding extension of Seller's performance dates, which are, in any event, understood to be approximate. IN NO EVENT SHALL BUYER BE ENTITLED TO INCIDENTAL OR CONSEQUENTIAL DAMAGES FOR LATE PERFORMANCE OR FOR A FAILURE TO PERFORM. Seller reserves the right to make partial shipments and to ship products, parts or work which may be completed prior to the scheduled performance date.

C. In the event that Seller has agreed to mount motors, turbines, gears, or other products which are not manufactured by Seller and which are not an integral part of Seller's manufactured product, and a delay in the delivery of such products to Seller occurs that will cause a delay in Seller's performance date, Seller reserves the right to ship its product upon completion of manufacture and to refund an equitable portion of the amount originally included in the purchase price for mounting without incurring liability for non-performance.

D. Seller reserves to itself the right to change its specifications, drawings and standards if such changes will not impair the performance of its products, and parts, and further those products, and parts, will meet any of Buyer's specifications and other specific product requirements which are a part of this agreement. Seller is a global supplier of products and utilizes parts and products obtained worldwide, and Seller's products supplied under this contract shall be subject to Seller's sole determination as to all manufacturing, sourcing, assembly and supply unless otherwise specifically agreed in writing.

E. The manufacture and inspection of products and parts shall be to Seller's Engineering and Quality Assurance standards, plus such other inspections or tests of documentation as are specifically agreed to by Seller. Requirements for any additional inspection, tests, documentation, or Buyer witness of manufacture, test, and/or inspection shall be subject to additional charges.

4. TITLE AND RISK OF LOSS

Title and risk of loss shall pass to buyer upon delivery of products at the designated "Ex Works" as defined by Incoterms, unless other wise agreed by the parties.

5. EROSION AND CORROSION

It is specifically understood that products and parts sold hereunder are not warranted for operation with erosive or corrosive fluids or for operation with any fluid or under any operating condition in variance with the specifications of this contract. No product or part shall be deemed to be defective by reason of failure to resist erosive or corrosive action of any fluid and Buyer shall have no claim whatsoever against Seller therefore. No product shall be deemed defective by reason of any effect on Seller's products of the action or results (such as vibration) of any goods or system (such as piping) not supplied by Seller.

6. BUYER'S RESPONSIBILITY

The design specifications of the equipment require the operation of the equipment within certain parameters and may call for the use of speed controls, safety devices, set points or other control devices to insure that the operation remains within design parameters. Buyer agrees and understands that the equipment must be operated and maintained within design specifications and operated within the specifications of the contract, irrespective of whether controls or devices are otherwise required.

7. WARRANTY AND LIMITATION OF LIABILITY.

A. Seller warrants only that its product and parts, when shipped, will be free from defects in materials and workmanship. All claims for defective products or parts under this warranty must be made in writing immediately upon discovery and, in any event, within two (2) years of shipment by seller and all claims for defective work must be made in writing immediately upon discovery. Defective items must be held for Seller's inspection and returned to the sellers' point of original shipment upon request.
ANY UNAUTHORIZED DISSASSEMBLY, ALTERATION OF OR TAMPERING WITH ANY PRODUCT OR COMPONENT MAY "VOID" THE WARRANTY, IN THAT SUCH ACTION WILL RESULT IN SELLER BEING RELEASED AND RELIEVED FROM ITS OBLIGATIONS UNDER THIS WARRANTY AND FOR ANY FURTHER COSTS OR ACTIONS UNDER CLAUSE 7.C, FOLLOWING, AND THE BUYER ASSUMING SOLE RESPONSIBILITY FOR THE COSTS AND RESULTS OF SUCH ACTION. THE FOREGOING IS EXPRESSLY IN LIEU OF ALL OTHER WARRANTIES WHATSOEVER, EXPRESS, IMPLIED AND STATUTORY, INCLUDING WITHOUT LIMITATION, THE IMPLIED, WARRANTIES OF MERCHANTABILITY AND FITNESS.

B. ANY PRODUCT (S) SOLD HEREUNDER WHICH ARE NOT MANUFACTURED BY SELLER ARE NOT WARRANTED BY SELLER and shall be covered only by the express warranty, if any, of the manufacturer thereof. With respect to products and parts not manufactured by Seller, Seller's only obligation shall be to assign to Buyer, to the extent possible, whatever warranty Seller obtains from the manufacturer.

C. Upon Buyer's submission of a claim as provided above and its substantiation, Seller shall at its option either (i) repair or replace its product, part or work at the original place of shipment, or (ii) refund an equitable portion of the purchase price.

D. THE FOREGOING IS SELLER'S ONLY OBLIGATION AND BUYER'S EXCLUSIVE REMEDY FOR BREACH OF WARRANTY AND, EXCEPT FOR THE REMEDIES PERMITTED UNDER THE PERFORMANCE, INSPECTION AND ACCEPTANCE AND THE PATENTS CLAUSES HEREOF, THE FOREGOING IS BUYER EXCLUSIVE REMEDY AGAINST SELLER FOR ALL CLAIMS ARISING HEREUNDER OR RELATING HERETO WHETHER SUCH CLAIMS ARE BASED ON BREACH OF CONTRACT, TORT (INCLUDING NEGLIGENCE OR STRICT LIABILITY), INDEMNITY OR OTHER THEORIES. BUYER'S FAILURE TO SUBMIT A CLAIM AS PROVIDED ABOVE SHALL SPECIFICALLY WAIVE ALL CLAIMS FOR DAMAGES OR OTHER RELIEF, INCLUDING BUT NOT LIMITED TO CLAIMS BASED ON LATENT DEFECTS. IN NO EVENT SHALL BUYER BE ENTITLED TO INDIRECT, SPECIAL, INCIDENTAL OR CONSEQUENTIAL DAMAGES, NOR FOR DAMAGES FOR LOSS OF USE, LOST PROFITS OR REVENUE, INTEREST, LOST GOODWILL, WORK OR PRODUCTION STOPPAGE, IMPAIRMENT OF OTHER GOODS, INCREASED EXPENSES OF OPERATION, OR THE COST OF PURCHASING REPLACEMENT POWER OR OTHER SERVICES BECAUSE OF SERVICE INTERRUPTIONS. FURTHERMORE, IN NO EVENT SHALL SELLER'S TOTAL LIABILITY FOR DAMAGES OF BUYER EXCEED THE PURCHASE PRICE OF THE PRODUCTS OR PARTS MANUFACTURED BY SELLER AND UPON WHICH SUCH LIABILITY IS BASED. ANY ACTION ARISING HEREUNDER RELATED HERETO, WHETHER BASED ON BREACH OF CONTRACT, TORT (INCLUDING NEGLIGENCE) OR OTHER THEORIES, MUST BE COMMENCED WITHIN ONE (1) YEAR AFTER THE CAUSE OF ACTION ACCRUES OR IT SHALL BE BARRED.

8. PURCHASER'S REPRESENTATIONS & WARRANTIES

Purchaser represents and warranties that the products(s) covered by this contract shall not be used in or in connection with a nuclear facility or application. The parties agree that this representation and warranty is material and is being relied on by seller. This provision may be modified in a separate writing signed by an officer of Price Pump Co.

9. PATENTS

Seller agrees to assume the defense of any suit for infringement of any patents brought against Buyer to the extent of such suit charges infringement of an apparatus or product claim by Seller's product in and of itself, provided (i) said product is built entirely to Seller's design, (ii) Buyer notifies Seller in writing of the filing of such suit within ten (10) days after the service of process thereof, and (iii) Seller is given complete control of the defense of such suit, including the right to defend, settle and make changes in the product for the purpose of avoiding infringement of any process or method claims. Provided however, Seller will not defend any suit for infringement of a claimed patent where such alleged infringement is the result of following specific instruction furnished by Seller.

10. EXTENT OF SUPPLY

Only products as listed in Seller's proposal are included in this agreement. It must not be assumed that Seller has included anything beyond same.

11. MANUFACTURING SOURCES

To maintain delivery schedules, Seller reserves the right to have all or any part of the Buyer's order manufactured at any of Sellers', sellers' licensees or sub contractors' plants, globally.

12. TERMS OF PAYMENT

Net 30 days from date of invoice.

13. ARBITRATION

In the event a dispute arises between the parties relating to or arising out of this agreement, the parties agree to attempt to have their senior management amicably settle the matter. In the event that the matter cannot be settled, the parties shall submit all disputes relating to this Agreement (whether contract, tort, products liability or otherwise) to binding Arbitration before a panel of arbitrators under the Commercial Dispute Resolution Procedures of the American Arbitration Association. Each party shall appoint an arbitrator and the third shall be selected in accordance with the rules of the American Arbitration Association. Judgment upon the award may be entered in any court having jurisdiction. The parties shall cooperate in providing reasonable disclosure of relevant documents. Each party shall bear its own expenses, and the costs and fees of the arbitration shall be borne as allocated by the Arbitrator.

DOW FILMTEC MEMBRANES

DOW FILMTEC™ Membranes

DOW FILMTEC Seawater RO Elements for Marine Systems

Features

Improved DOW FILMTEC™ seawater reverse osmosis elements offer the highest productivity while maintaining excellent salt rejection.

- DOW FILMTEC SW30 membrane elements have the highest flow rates available to meet the water demands of both sea-based and land-based desalinators.
- DOW FILMTEC SW30 elements may also be operated at lower pressure to reduce pump size, cost and operating expenses.
- Improved DOW FILMTEC seawater membrane combined with automated, precision element fabrication result in the most consistent product performance available.

Product Specifications

Product	Part Number	Applied Pressure psig (bar)	Permeate Flow Rate gpd (m^3/d)	Stabilized Salt Rejection (%)
SW30-2514	80733	800 (55)	150 (0.6)	99.4
SW30-2521	80734	800 (55)	300 (1.1)	99.4
SW30-2540	80737	800 (55)	700 (2.6)	99.4
SW30-4021	80740	800 (55)	800 (3.0)	99.4
SW30-4040	80741	800 (55)	1,950 (7.4)	99.4

1. Permeate flow and salt rejection based on the following test conditions: 32,000 ppm NaCl, pressure specified above, 77°F (25°C) and the following recovery rates; SW30-2514 – 2%, SW30-2521 & SW30-4021 – 5%, SW30-2540 & SW30-4040 – 8%.
2. Permeate flows for individual elements may vary +/-20%.
3. For the purpose of improvement, specifications may be updated periodically.

Figure 1

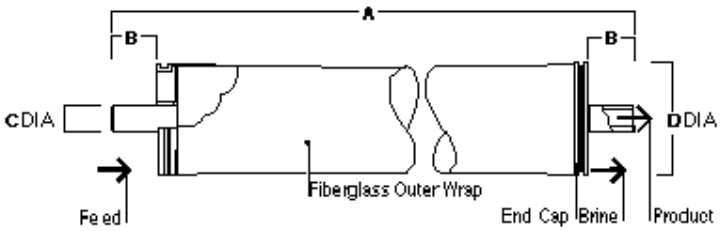

Product	Maximum Feed Flow Rate gpm (m^3/h)	Dimensions – Inches (mm) A	B	C	D
SW30-2514	6 (1.4)	14.0 (356)	1.19 (30.2)	0.75 (19)	2.4 (61)
SW30-2521	6 (1.4)	21.0 (533)	1.19 (30.2)	0.75 (19)	2.4 (61)
SW30-2540	6 (1.4)	40.0 (1,016)	1.19 (30.2)	0.75 (19)	2.4 (61)
SW30-4021	16 (3.6)	21.0 (533)	1.05 (26.7)	0.75 (19)	3.9 (99)
SW30-4040	16 (3.6)	40.0 (1,016)	1.05 (26.7)	0.75 (19)	3.9 (99)

1. Refer to DOW FILMTEC Design Guidelines for multiple-element systems.
2. SW30-2514, SW30-2521 and SW30-2540 elements fit nominal 2.5-inch I.D. pressure vessels.
   SW30-4021 and SW30-4040 elements fit nominal 4-inch I.D. pressure vessel.

1 inch = 25.4 mm

™® Trademark of The Dow Chemical Company ("Dow") or an affiliated company of Dow

Operating Limits

• Membrane Type	Polyamide Thin-Film Composite
• Maximum Operating Temperature	113°F (45°C)
• Maximum Operating Pressure	1,000 psi (69 bar)
• Maximum Pressure Drop	15 psig (1.0 bar)
• pH Range, Continuous Operation[a]	2 - 11
• pH Range, Short-Term Cleaning[b]	1 - 13
• Maximum Feed Silt Density Index	SDI 5
• Free Chlorine Tolerance[c]	<0.1 ppm

[a] Maximum temperature for continuous operation above pH 10 is 95°F (35°C).
[b] Refer to Cleaning Guidelines in specification sheet 609-23010.
[c] Under certain conditions, the presence of free chlorine and other oxidizing agents will cause premature membrane failure. Since oxidation damage is not covered under warranty, DOW FILMTEC recommends removing residual free chlorine by pretreatment prior to membrane exposure. Please refer to technical bulletin 609-22010 for more information.

Important Information

Proper start-up of reverse osmosis water treatment systems is essential to prepare the membranes for operating service and to prevent membrane damage due to overfeeding or hydraulic shock. Following the proper start-up sequence also helps ensure that system operating parameters conform to design specifications so that system water quality and productivity goals can be achieved.

Before initiating system start-up procedures, membrane pretreatment, loading of the membrane elements, instrument calibration and other system checks should be completed.

Please refer to the application information literature entitled “Start-Up Sequence” (Form No. 609-02077) for more information.

Operation Guidelines

Avoid any abrupt pressure or cross-flow variations on the spiral elements during start-up, shutdown, cleaning or other sequences to prevent possible membrane damage. During start-up, a gradual change from a standstill to operating state is recommended as follows:

- Feed pressure should be increased gradually over a 30-60 second time frame.
- Cross-flow velocity at set operating point should be achieved gradually over 15-20 seconds.
- Permeate obtained from first hour of operation should be discarded.

General Information

- Keep elements moist at all times after initial wetting.
- If operating limits and guidelines given in this bulletin are not strictly followed, the limited warranty will be null and void.
- To prevent biological growth during prolonged system shutdowns, it is recommended that membrane elements be immersed in a preservative solution.
- The customer is fully responsible for the effects of incompatible chemicals and lubricants on elements.
- Maximum pressure drop across an entire pressure vessel (housing) is 50 psi (3.4 bar).
- Avoid static permeate-side backpressure at all times.

DOW FILMTEC™ Membranes
For more information about DOW FILMTEC membranes, call the Dow Water & Process Solutions business:
North America: 1-800-447-4369
Latin America: (+55) 11-5188-9222
Europe: (+32) 3-450-2240
Pacific: +60 3 7958 3392
Japan: +813 5460 2100
China: +86 21 2301 1000
www.dowwaterandprocess.com

Notice: The use of this product in and of itself does not necessarily guarantee the removal of cysts and pathogens from water. Effective cyst and pathogen reduction is dependent on the complete system design and on the operation and maintenance of the system.

Notice: No freedom from any patent owned by Dow or others is to be inferred. Because use conditions and applicable laws may differ from one location to another and may change with time, Customer is responsible for determining whether products and the information in this document are appropriate for Customer's use and for ensuring that Customer's workplace and disposal practices are in compliance with applicable laws and other government enactments. Dow assumes no obligation or liability for the information in this document. NO WARRANTIES ARE GIVEN; ALL IMPLIED WARRANTIES OF MERCHANTABILITY OR FITNESS FOR A PARTICULAR PURPOSE ARE EXPRESSLY EXCLUDED.

™® Trademark of The Dow Chemical Company ("Dow") or an affiliated company of Dow

BURKERT DIVERSION VALVE

Type 0121, 0330, 0331 (0124, 0125, 0332, 0333)

2/2- and 3/2-Way Solenoid Valve
2/2- und 3/2-Wege-Magnetventil
Électrovanne à 2/2 et 3/2 voies

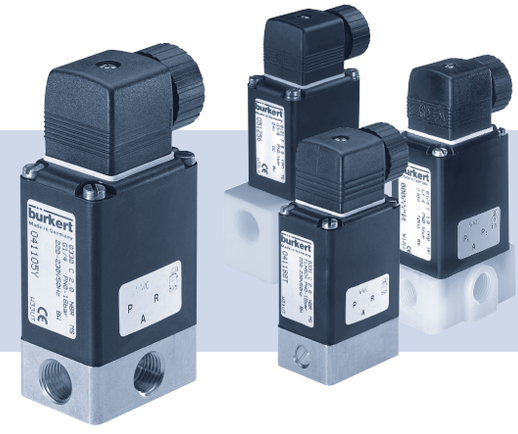

Operating Instructions
Bedienungsanleitung
Manuel d'utilisation

MAN 1000010161 ML Version: H Status: RL (released | freigegeben) printed: 13.06.2017

Bürkert Fluid Control Systems
Sales Center
Christian-Bürkert-Str. 13-17
D-74653 Ingelfingen
Tel. + 49 (0) 7940 - 10 91 111
Fax + 49 (0) 7940 - 10 91 448
E-mail: info@de.buerkert.com

International address
www.burkert.com

Manuals and data sheets on the Internet: www.burkert.com
Bedienungsanleitungen und Datenblätter im Internet: www.buerkert.de
Instructions de service et fiches techniques sur Internet : www.buerkert.fr

© Bürkert Werke GmbH & Co. KG, 2014 - 2017
Operating Instructions 1706/04_EU-EN_00893047 / Original DE

www.burkert.com

Table of Contents

1 The operating instructions 2
2 Authorized use 3
3 Basic safety instructions 4
4 System description 5
5 Technical data 6
6 Assembly 8
7 Electrical connection 10
8 Disassembly 12
9 Maintenance, troubleshooting 12
10 Transportation, storage, disposal 13

1 THE OPERATING INSTRUCTIONS

The operating instructions contain important information.

- Read the instructions carefully and follow the safety instructions.
- Keep the instructions in a location where they are available to every user.

The liability and warranty for the device are void if the operating instructions are not followed.

1.1 Symbols

- Designates instructions for risk prevention.

→ Designates a procedure which you must carry out.

DANGER!

Immediate danger! Serious or fatal injuries.

WARNING!

Possible danger! Serious or fatal injuries.

CAUTION!

Danger! Moderate or minor injuries.

NOTE!

Warns of damage to property.

Important tips and recommendations.

Refers to information in these operating instructions or in other documentation.

1.2 Definitions of terms

In these instructions, the term "device" always refers to the Type 0121, 0330, 0331, (0124, 0125, 0332, 0333).

2 AUTHORIZED USE

The device is designed to control, shut off and meter neutral and aggressive media up to a viscosity of 37 mm²/s.

- Use according to the authorized data, operating conditions and conditions of use specified in the contract documents and operating instructions.
- Provided the cable plug is connected and installed correctly, e.g. Bürkert Type 2508, the device satisfies degree of protection IP65 in accordance with DIN EN 60529 / IEC 60529.

Only operate the device

- when in perfect condition and always ensure proper storage, transportation, installation and operation.
- Use the device only as intended.

2.1 Restrictions

If exporting the device, observe any existing restrictions.

3 BASIC SAFETY INSTRUCTIONS

These safety instructions do not make allowance for any contingencies and events which may arise during assembly, operation and maintenance.

Risk of injury from high pressure in the system/device.

- Before working on the system or device, switch off the pressure and vent/drain lines.

Risk of injury due to electrical shock.

- Before working on the system or device, switch off the power supply and secure to prevent reactivation.
- Observe applicable accident prevention and safety regulations for electrical equipment.

Risk of burns/risk of fire if used for a prolonged switch-on time through hot device surface.

- Keep device away from highly flammable substances and media and do not touch with bare hands.

Risk of injury due to malfunction of valves with alternating voltage (AC).

Sticking core causes coil to overheat, resulting in a malfunction.

- Monitor process to ensure function is in perfect working order.

Risk of short-circuit/escape of media through leaking screw joints.

- Ensure seals are seated correctly.
- Carefully screw valve and pipelines together.

MAN 1000010161 ML Version: H Status: RL (released | freigegeben) printed: 13.06.2017

General hazardous situations.

To prevent injuries:

- In a potentially explosive area, the device may be used only in accordance with the specification on the type label. For the use, observe the supplementary instructions manual enclosed with the device with safety instructions for the explosion-risk area.
- The enclosed UL instructions must be followed in the UL area.
- Do not carry out any external or internal modifications and do not subject the device to mechanical loads (e.g. by placing objects on it or standing on it).
- Secure the device against unintentional activation.
- Only trained technicians may perform installation and maintenance work.
- The valves must be installed in accordance with the regulations applicable in the country.
- After an interruption in the power supply, ensure that the process is restarted in a controlled manner.
- Observe the general rules of technology.

4 SYSTEM DESCRIPTION

4.1 General description

The pivoted armature valves are direct acting 2/2 or 3/2-way solenoid valves in a wide variety of circuit functions and models. Solenoid system and media chamber are separated from one another by a separating diaphragm system. The valves are fast acting and have a long service life.

Type 0121	2/2 or 3/2-way solenoid valve, socket valve body
Type 0330	2/2 or 3/2-way solenoid valve, socket valve body
Type 0331	2/2 or 3/2-way solenoid valve, flange valve body
Type 0332	Bistable 2/2 or 3/2-way solenoid valve with 2 coil windings, socket valve body
Type 0333	Bistable 2/2 or 3/2-way solenoid valve with 2 coil windings, flange valve body
Type 0124	2/2 or 3/2-way solenoid valve, socket valve body
Type 0125	2/2 or 3/2-way solenoid valve, flange valve body

MAN 1000010161 ML Version: H Status: RL (released | freigegeben) printed: 13.06.2017

5 TECHNICAL DATA

The following values are indicated on the type label:

- **Voltage** (tolerance ±10 %) **/ current type**
- **Coil power consumption** (active power in W - at operating temperature)
- **Pressure range**
- **Body material** (MS=brass, VA=stainless steel, PV=PVC, TE=PTFE, PP=polypropylene, PD=PVDF)
- **Sealing material** (F=FKM, A=EPDM, B=NBR, C=FFKM)

5.1 Conformity

The Types 0121, 0330, 0331, (0124, 0125, 0332, 0333) are compliant with the EC Directives according to the EC Declaration of Conformity.

5.2 Standards

The applied standards, which are used to demonstrate compliance with the EC Directives, are listed in the EC type test certificate and/or the EC Declaration of Conformity.

5.3 Operating conditions

Ambient temperature

Type 0121	max. +50°C
Other types	max. +55°C

Duty cycle
for body material

Brass or stainless steel	long-term operation, duty cycle 100%
Plastic	max. permissible duty cycle see data sheet

Important information for functional reliability.
If switched off for a long period, 1-2 switching actions are recommended prior to restart.

Service life
High switching frequency and high pressures reduce the service life.

Degree of protection	IP65 in accordance with DIN EN 60529 / IEC 60529 with correctly connected and installed cable plug, e.g. Bürkert Type 2508

5.4 Mechanical data

Dimensions	see data sheet
Coil material	epoxide
Connections	G 1/4 (NPT 1/4, G 1/8, G 3/8, Rc 1/4 on request)

5.5 Fluidic data

Media	aggressive, neutral, gaseous and liquid media, which do not attack body and sealing materials. (see resistance table at www.buerkert.de).

Medium temperature for sealing material

FKM	0 °C – +90 °C
EPDM	-30 °C – + 90 °C
NBR	0 °C – + 80 °C
FFKM	+5 °C – +90 °C

Circuit functions		
A (NC)	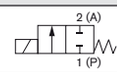	2/2-way valve, closed in rest position
B (NO)	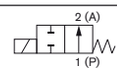	2/2-way valve, open in rest position
C (NC)	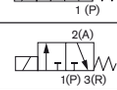	3/2-way valve; closed in rest position, output A unloaded
D (NO)	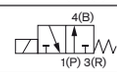	3/2-way valve, in rest position, output B pressurized
E	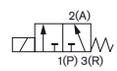	3/2-way mixing valve; in rest position, pressure connection P2 connected to output A, P1 closed
F	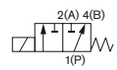	3/2-way distribution valve, in rest position, pressure connection P connected to output B
T	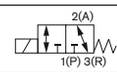	3/2-way all purpose valve

5.6 Electrical data

Connections DIN EN 175301-803 (DIN 43 650), shape A for cable plug Type 2508 or 2509

5.7 Type label

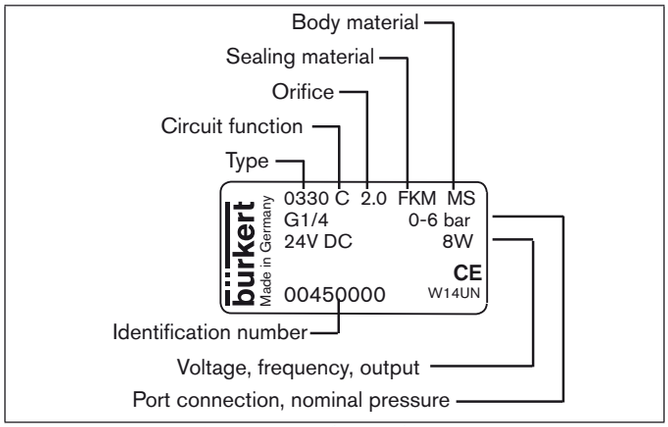

Fig. 1: Description of the type label (example)

6 ASSEMBLY

DANGER!

Risk of injury from high pressure in the system/device.
- Before working on the system or device, switch off the pressure and vent/drain lines.

Risk of injury due to electrical shock.
- Before working on the system or device, switch off the power supply and secure to prevent reactivation.
- Observe applicable accident prevention and safety regulations for electrical equipment.

WARNING!

Risk of injury from improper assembly.
- The assembly may be carried out only by trained technicians and with the appropriate tools.
- Secure system against unintentional activation.
- Following assembly, ensure a controlled restart.

MAN 1000010161 ML Version: H Status: RL (released | freigegeben) printed: 13.06.2017

6.1 Before installation

Installation position:

The installation position is optional. Preferably: Actuator at the top.

→ Prior to installation check pipelines for dirt and clean if necessary.

Dirt filter: To ensure that the solenoid valve functions reliably, a dirt filter (≤ 500 µm) must be installed in front of the valve input.

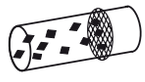

6.2 Installation

→ Observe flow direction:
Functioning of the device is only ensured if the circuit function is maintained.

Devices in socket model

→ Use PTFE tape as sealing material.

→ Determine the maximum screw-in depth of the connecting threads as this does not comply with any standard.

NOTE!

Caution risk of breakage.
- Do not use the coil as a lifting arm.

→ Hold the device with a suitable tool (open-end wrench) on the body; screw into the pipeline.

Attaching the device:

→ Via bore holes M4x8 (made from brass or stainless steel) or self-tapping screws 3.9 DIN 7970 (made from plastic, max. screw-in depth 10 mm) on the bottom side of the body at drill pattern 38x24.

Devices in flange model

Attaching the device:

→ Via supplied screws on basic devices or manifold.

→ Tighten fastening screws on the coil to a maximum torque of 2 Nm.

6.3 Manual control

NOTE!

- When the manual control is locked, the valve cannot be actuated electrically.

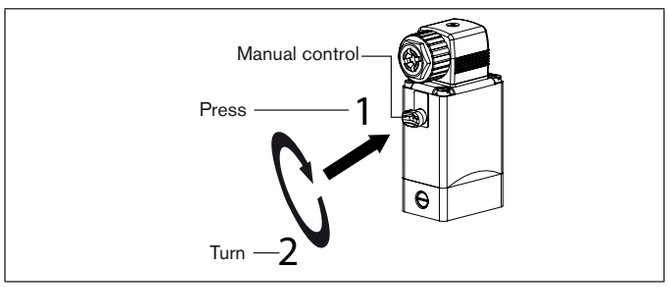

Fig. 2: Manual control

7 ELECTRICAL CONNECTION

DANGER!

Risk of injury due to electrical shock.
- Before working on the system or device, switch off the power supply and secure to prevent reactivation.
- Observe applicable accident prevention and safety regulations for electrical equipment.

If the protective conductor is not connected, there is a risk of electric shock.
- Always connect protective conductor and check electrical continuity between coil and housing.

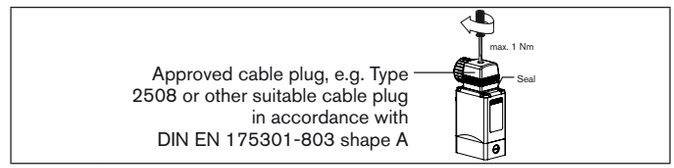

Fig. 3: Connecting the cable plug to the power supply

Note the voltage and current type as specified on the type label.

7.1 Standard model

→ Connect L1/+ and N/– to terminals 1 and 2, independent of the polarity.

→ Connect protective conductor.

→ Attach seal and check for correct fit.

→ Tighten cable plug (Type 2508 or 2509 in accordance with DIN EN 175301-803 (DIN 43 650), shape A, for order numbers see data sheet); while doing so, observe the maximum torque of 1 Nm.

→ Check electrical continuity between coil and body (protective conductor function).

7.2 Pulse model (CF 02)

In accordance with the terminals on the valves, the connection terminals in the cable plug are marked with the numbers 1 to 3.

→ Connect as shown in "Fig. 4". Pulse on terminal 1 closes the valve; pulse on terminal 2 opens the valve.

→ Attach seal and check for correct fit.

→ Tighten cable plug (Type 2508 or 2509 in accordance with DIN EN 175301-803 (DIN 43 650), shape A, for order numbers see data sheet); while doing so, observe the maximum torque of 1 Nm.

→ Check electrical continuity between coil and body (protective conductor function).

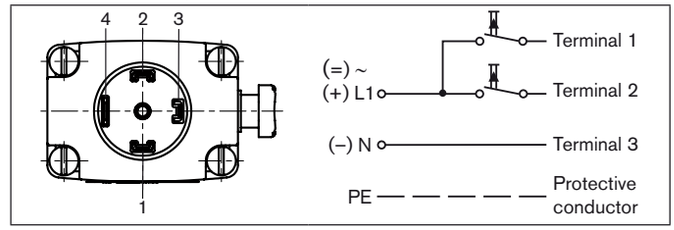

Fig. 4: Electrical connection - pulse model (CF 02)

NOTE!

- Prevent simultaneous pulsing on both coil windings.
- Parallel to the terminals, no other consumers (relay, etc.) may be connected.
- The respective coil connection that does not carry current must be galvanically isolated (open).
- In case two or more valves are connected in parallel, the use of two-pole or multi-pole switches must ensure that this requirement is met.

8 DISASSEMBLY

DANGER!

Risk of injury from high pressure in the system/device.
- Before working on the system or device, switch off the pressure and vent/drain lines.

Risk of injury due to electrical shock.
- Before working on the system or device, switch off the power supply and secure to prevent reactivation.
- Observe applicable accident prevention and safety regulations for electrical equipment.

WARNING!

Risk of injury from improper disassembly.
- Disassembly may be carried out only by trained technicians and with the appropriate tools.

Risk of injury from hazardous media.
- Before loosening lines or valves, flush out hazardous media, depressurize and drain the lines.

9 MAINTENANCE, TROUBLESHOOTING

9.1 Safety instructions

DANGER!

Risk of injury from high pressure in the system.
- Turn off the pressure and vent the lines before loosening lines or valves.

Risk of injury due to electrical shock.
- Before working on the system or device, switch off the power supply and secure to prevent reactivation.
- Observe applicable accident prevention and safety regulations for electrical equipment.

WARNING!

Risk of injury from improper maintenance work.
- Maintenance may be carried out only by trained technicians and with the appropriate tools.
- Secure system against unintentional activation.
- Following maintenance, ensure a controlled restart.

MAN 1000010161 ML Version: H Status: RL (released | freigegeben) printed: 13.06.2017

9.2 Malfunctions

If malfunctions occur, check whether:

→ the device has been installed according to the instructions,

→ the electrical and fluid connections are correct,

→ the device is not damaged,

→ all screws have been tightened,

→ the voltage and pressure have been switched on,

→ the pipelines are clean.

Malfunction	Possible cause
Valve does not switch	Short circuit or coil interrupted
	Medium pressure outside the permitted pressure range
	Manual control locked
Valve does not close	Inner compartment of the valve is dirty
	Manual control locked

9.2.1 Repairs

Repairs may only be carried out by the manufacturer. Operating data may change if spare parts are replaced by the user.

10 TRANSPORTATION, STORAGE, DISPOSAL

NOTE!

Transport damage.

Inadequately protected devices may be damaged during transportation.
- Protect the device against moisture and dirt in shock-resistant packaging during transportation.
- Prevent the temperature from exceeding or dropping below the permitted storage temperature.

Incorrect storage may damage the device.
- Store the device in a dry and dust-free location.
- Storage temperature -40 – +80°C.

Damage to the environment caused by parts contaminated with media.
- Dispose of the device and packaging in an environmentally friendly manner.
- Observe applicable disposal and environmental regulations.

10. WARRANTY

OWNER'S LIMITED WARRANTY

Dometic Corporation (Dometic) warrants to the original purchaser/owner, and to subsequent owners during the applicable Limited Warranty Period, Dometic's Water Purification Products, Pumps, Related Accessories and Replacement Parts against failure from defects in material or workmanship arising in the periods specified in the Table of Limited Warranty Periods below. If a covered product or part fails during the applicable warranty period, Dometic will remedy same by repairing or replacing the defective warranted product or part as outlined below in the Table of Limited Warranty Periods. Defective parts shall be replaced free of charge and labor shall be paid for by Dometic only as set forth in the Table. Dometic reserves the right to refund the purchase price of the subject product or part as an alternative remedy to repair or replacement. The remedy allowed hereunder (repair, replacement or refund) shall be at Dometic's sole option.

SECTION I

WHAT'S COVERED

What does the Limited Warranty cover?

Water Purification Products, Pumps, Related Accessories and Replacement Parts manufactured and/or marketed by Dometic for the durations set forth in the Table of Limited Warranty Periods.

What is disclaimed, and are the warranties and remedies exclusive of all others?

Dometic does not disclaim the implied warranty of merchantability, but limits the duration of that implied warranty to the duration of the Limited Warranty offered herein.

This Limited Warranty, as well as the implied warranty of merchantability and the remedies offered by Dometic herein, are EXCLUSIVE and are made or provided in lieu of all other express or implied warranties, obligations, or liabilities. In no event shall Dometic be responsible or liable for any incidental or consequential damages alleged to have resulted from any defect in or failure of any warranted product or part. In those instances in which a cash refund is made, **such refund shall effect the cancellation of the contract of sale and such refund shall constitute full and final satisfaction of all claims which the purchaser has or may have against Dometic due to any actual or alleged breach of warranty, either express or implied, including, without limitation, the implied warranty or merchantability or fitness for a particular purpose.** Some states do not allow the exclusion or limitation of incidental or consequential damages so the above limitation may not apply to you. Some states do not allow limitations on how long an implied warranty lasts, so the above limitation may not apply to you.

The Dealer is not an agent for Dometic, except for the purpose of administering the above warranty to the extent herein provided. Dometic does not authorize the dealer or any other person to assume for Dometic any liability in connection with such warranty, or any liability or expense incurred in the replacement or repair of its products other than those expressly authorized herein. Dometic shall not be responsible for any liability or expense except as is specifically authorized and provided herein.

Dometic reserves the right to improve its products, through changes in design or material without being obligated to incorporate such changes in products of prior manufacture. Dometic can make changes at any time in design, materials, or part of units of any one, model year, without obligation or liability to owners of units of the same year's model of prior manufacture.

This warranty gives you, the purchaser/owner, specific legal rights, and you may also have other rights which vary from state to state.

OWNER'S LIMITED WARRANTY

SECTION II

WHAT'S NOT COVERED

What does this Limited Warranty not cover?

This Warranty Shall Not Apply to:

1. Failures resulting from improper installation or use contrary to instructions.
2. Failures resulting from abuse, misuse, accident, fire, or submergence.
3. Any part manufactured by Dometic, which shall have been altered so as to impair its original characteristics.
4. Any parts which fail as a result of misuse, improper application or improper installation.
5. Items not manufactured by Dometic, i.e., items, which are purchased from another manufacturer and supplied as received by Dometic without alteration or modification except as any part of a Dometic manufactured unit or component.
6. Components or parts used by or applied by the purchaser, as an integral part of products not manufactured by Dometic.
7. Labor resulting from difficult access to a Dometic product. The original installer or OEM is responsible for accessibility of unit.
8. Leaks due to improper installation of system, for example: hose clamps, fittings, flare nuts, quick disconnects.
9. Freight Damage.
10. Pumps that have been run dry, are water damaged or have blown freeze plugs.
11. Pumps with cracked heads.
12. Pump seals are not covered.
13. UV light bulbs are not covered.
14. Sea strainer elements are not covered.
15. Cartridge filter elements are not covered.
16. Sand & gravel in a multi-media filter are not covered.
17. Pump packing assemblies are not covered.
18. Pump valve assemblies are not covered.
19. Pump crankcase oil is not covered.
20. Gauge instrument calibration is not covered.
21. Fuses are not covered.
22. Valve seals and packings are not covered.
23. Exterior corrosion is not covered.
24. Membrane elements are not covered.
25 Logic boards with water damage.
26. Logic boards with blown MOV's (Power Surge)
27. Mis-programmed displays.
28. Displays or remotes with water damage.
29. Failures due to improper winterization.
30. Unit damage as a result of improper return packaging.
31. Travel costs are included in the hourly labor allowances and should not be billed as a separate item without preapproval from the factory.

<u>Installation and application of Dometic components are not warranted by Dometic, because Dometic has no control or authority over the selection, location, application, or installation of these components.</u>

OWNER'S LIMITED WARRANTY

SECTION III

COVERAGE PERIOD

What is the period of coverage?

SEE TABLE OF LIMITED WARRANTY PERIODS BELOW.

How does one determine when the Limited Warranty Period begins? All Dometic products bear a data plate on which there are model and serial numbers. The date of manufacture of the product can be determined by Dometic based on the serial number on the product. To determine whether or not any Dometic component is in warranty, proceed as follows:

1. Determine the model and serial number on the data plate located on the product. Write or call the Dometic Customer Service Department to obtain the manufacture date of the product. The hours of the Customer Service Department are 8:00 a.m. - 5:00 p.m. (USA, Eastern Standard Time Zone) Monday through Friday excluding holidays.

2. It is possible that a considerable time lag exists between the date a product or component is manufactured and the date it is put in service. In such instances, the date of manufacture could indicate that the item is out of warranty. However, based on the date the equipment is first put in service, the item may still be covered by the Dometic Limited Warranty. For proof of date put in service, Dometic will require a copy of the bill of sale of the Dometic equipment from the installer or new boat dealer to the original owner.

OWNER'S LIMITED WARRANTY

SECTION IV

GETTING COVERED WARRANTY SERVICE

How does the purchaser/owner get warranty service?

Please read the following Warranty Procedure: If the failure of a Dometic component is determined to be covered under the Dometic warranty and the time in service is determined to be within the warranty time limit, the owner has the following three options:

1. Preferred option: Have a Dometic authorized Servicing Dealer, perform the work needed. The customer needs to call Dometic Customer Service Department for a recommendation as to the closest dealer. If the customer already knows an authorized servicing dealer, the dealer should be contacted directly.

2. Second option: If the customer contacts Dometic Service Department for a Servicing Dealer and Dometic has no one in that particular area, Dometic will authorize the use of a local service company and Dometic will work with the local company to assist in any way possible.

The customer may contact the Dometic Service Department at 1(800) 542-2477, Monday through Friday, 8:00am - 5:00pm.

TABLE OF LIMITED WARRANTY PERIODS

Important Notes Regarding Product Start-up/ Commissioning:

1. Warranty periods begin from the date of possession of the boat/vessel by the first owner if OEM installed or date of installation if dealer installed, but not to exceed three (3) years from date of production of the product. However, if the product is started for any reason by the OEM or dealer, notwithstanding any provision to the contrary, the warranty period will be for a period of one (1) year commencing from the date that the product was started by the OEM or dealer. The warranty is transferable and will carry the remainder of the original owner's warranty based on the original date of purchase or date of installation.

2. Proof of purchase or installation may be required to verify warranty coverage.

3. Any unit or replacement part installed due to a warranty failure carries the remainder of the original warranty. Warranty coverage does not start over from the repair/replacement date.

4. Warranty coverage shall not exceed three (3) years from the date of production of the product.

5. These warranty periods are effective February 1, 2014.

WATER PURIFICATION PRODUCTS:
PRODUCT SALE TYPE WARRANTY COVERAGE

Spot Zero OEM 1-year warranty, parts and labor, from date of delivery of vessel. Not to exceed 3 years from date of production of product, and subject to **Important Notes above**. Pump warranty, see Pump section.

Dealer Installed 1-year warranty, parts and labor, from date of installation. Not to exceed 3 years from date of production of product, and subject to **Important Notes above**. Pump warranty, see Pump section.

Sea Xchange OEM 1-year warranty, parts and labor, Not to exceed 3 years from date of production of product, and subject to **Important Notes above**. Pump warranty, see Pump section.

Dealer Installed 1-year warranty, parts and labor, from date of installation. Not to exceed 3 years from date of production of product, and subject to **Important Notes above**. Pump warranty, see Pump section.

(SE SERIES, SX SERIES FROM DATE OF DELIVERY OF VESSEL. XTC SERIES, CX SERIES)

PUMPS, ACCESSORIES, REPLACEMENT PARTS:
PRODUCT SALE TYPE WARRANTY COVERAGE

Pumps OEM or Dealer Installed 1 year warranty, parts and labor. Wearable parts such as pump seals, brushes and plastic valves are not covered under warranty.

OWNER’S LIMITED WARRANTY

SECTION IV (CONTINUED)

Dealer Installed and 1 year warranty, parts only. Wearable parts such as pump seals, brushes and plastic valves are not covered under warranty.

Accessories OEM, Dealer Installed, 1 year warranty, parts only.

Replacement Parts Aftermarket sales. 90-Day warranty, parts only.