DOMETIC

AIR CONDITIONERS
FRESHJET

FJ 2200, FJ 3200

EN

Air conditioning roof unit

Operating manual

Please read this instruction manual carefully before first use, and store it in a safe place. If you pass on the product to another person, hand over this instruction manual along with it.

Table of contents

1 Explanation of symbols 4

2 Safety instructions 5
- 2.1 General safety 5
- 2.2 Operating the device safely 7

3 Target group for this manual 7

4 Scope of delivery 8

5 Intended use 9

6 Technical description 9
- 6.1 Components 10
- 6.2 Control panel 15
- 6.3 Remote control 17
- 6.4 Air conditioning modes 20
- 6.5 Additional functions 21

7 Before initial use 22

8 Operating the roof air conditioner 23
- 8.1 Basic notes on operation 23
- 8.2 Using the remote control 23
- 8.3 Hint for improved use 24
- 8.4 Switching the roof air conditioner on and off 25
- 8.5 Selecting the air conditioning mode 26
- 8.6 Selecting the blower setting manually 26
- 8.7 Setting the temperature 27
- 8.8 Adjusting the air nozzles 27
- 8.9 Setting the timer 28
- 8.10 Activating the sleep function 30
- 8.11 Activating the “I feel” function 31
- 8.12 Operating the lights (depending on the models) 32
- 8.13 Replacing the remote control batteries 33
- 8.14 Setting the time 33
- 8.15 Setting the winter mode 34

9 Cleaning the roof air conditioner 35
10 Maintenance of the roof air conditioner. 36
11 Troubleshooting 38
12 Warranty 39
13 Disposal 40
14 Technical data 42

1 Explanation of symbols

WARNING!
Safety instruction: Failure to observe this instruction can cause death or serious injury.

CAUTION!
Safety instruction: Failure to observe this instruction can lead to injury.

NOTICE!
Failure to observe this instruction can cause material damage and impair the function of the product.

NOTE
Supplementary information for operating the product.

2 Safety instructions

The manufacturer accepts no liability for damage in the following cases:

- Damage to the product resulting from mechanical influences and incorrect connection voltage
- Alterations to the product without express permission from the manufacturer
- Use for purposes other than those described in the operating manual

In particular, the manufacturer will not be liable for any consequential damage, especially consequential damage caused by failure of the roof air conditioner.

Note the following basic safety information when using electrical devices to protect against:

- Electric shock
- Fire hazards
- Injury

2.1 General safety

WARNING!

- **Electrical devices are not toys**.
  Keep electrical appliances out of reach of children or infirm persons. Do not let them use the appliances without supervision.
- Persons whose physical, sensory or mental capabilities or whose lack of experience and knowledge prevent them from using the device safely should not use it without supervision or instruction by a responsible person.
- The appliance is not to be used by persons (including children) with reduced physical, sensory or mental capabilities, or lack of experience and knowledge, unless they are under supervision or have been given instruction.
- Only use the device as intended.
- Do not make any alterations or conversions to the device.

- Installation, maintenance and repairs of the roof air conditioner may only be carried out by qualified personnel who are familiar with the risks involved when handling refrigerant and air conditioning systems as well as the relevant regulations. Inadequate repairs may cause serious hazards. For repair service, please contact the service centre in your country (addresses on the back page).
- Do not use the roof air conditioner near flammable fluids or in closed rooms.
- Make sure no combustible objects are stored or installed near the air outlet. A distance of at least 50 cm must be kept.
- Do not reach into air outlets or insert any foreign objects in the roof air conditioner.
- Do **not** undo the upper cover of the roof air conditioner in the event of a fire. Use approved extinguishing agents instead. Do not use water to extinguish fires.
- Children should be supervised to ensure that they do not play with the appliance.

NOTICE!

- Never drive through automatic car washes when the roof air conditioner is mounted.
- Please ask your vehicle manufacturer if a technical inspection is required after fitting an air conditioner and whether the height entered in your vehicle documents needs to be altered:
- FJ 2200: increased height 225 mm
- FJ 3200: increased height 248 mm
- If faults occur in the roof air conditioner's refrigerant circuit, the roof air conditioner must be checked by a specialist company and properly repaired. The refrigerant must never be released into the air.

2.2 Operating the device safely

WARNING!

- Always disconnect the power supply when working on the device.

NOTICE!

- The roof air conditioner is not suitable for use in agricultural or construction vehicles.
- Operate the device only if you are certain that the housing and the cables are undamaged.

3 Target group for this manual

This operating manual is for the user of the roof air conditioner.

4 Scope of delivery

FJ 2200

Designation	Reference No.
Dometic FJ 2200 roof air conditioner with heating	9600021821
Installation manual	
Operating manual	

FJ 3200

Designation	Reference No.
Dometic FJ 3200 roof air conditioner with heat pump and soft start	9600021822 9105306659
Installation manual	
Operating manual	

Air outlet unit

Designation	Reference No.
Chillout ADB	9105306662 9600008662

5 Intended use

The Dometic FreshJet roof air conditioner is designed for use in motorcaravans, caravans and other vehicles with habitation compartments only. It is **not** suitable for houses and apartments.

The roof air conditioner is **not** suitable for installation in construction machines, agricultural machines or similar equipment. It will not work properly if exposed to strong vibrations.

The function of the roof air conditioner is guaranteed for temperatures between 0 °C and 43 °C.

6 Technical description

The roof air conditioner supplies the interior with cool or heated dehumidified air without dust and dirt.

Dimmable LED lamps integrated in the air outlet unit provide pleasant lighting (LED lights are available only on specific model).

The roof air conditioner is operated with the remote control.

NOTE
The roof air conditioner can lower the temperature within the vehicle to a certain level. The temperature depends on the type of vehicle, the ambient temperature and the cooling capacity of your roof air conditioner.
Below an outer temperature of 16 °C the roof air conditioner doesn't cool anymore. In this case only use the air conditioning mode "Circulating air" (✇).

The roof air conditioner is protected against over-voltage. When the supply voltage is above 265 V, the roof air conditioner stops working. It resumes normal service when the supply voltage is within the allowed range.

6.1 Components

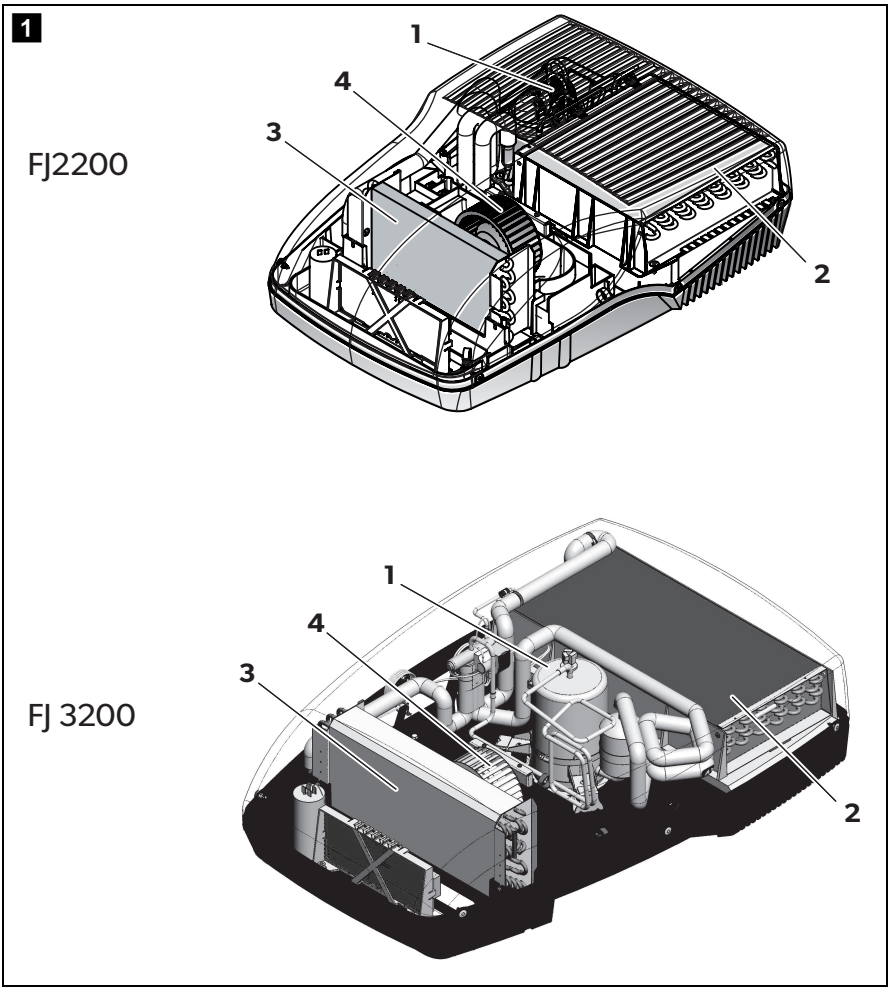

The refrigerant circuit of the roof air conditioner consists of the following main components (fig. **1**, page 10):

- **Compressor** (**1**)
  The compressor draws in the refrigerant used and compresses it. This raises the pressure and therefore the temperature of the refrigerant.
- **Condenser** (**2**)
  The built-in liquefier works like a cooler or heat exchanger. The air flowing past absorbs the heat and the hot refrigerant gas cools down and becomes liquid.
- **Evaporator** (**3**)
  The evaporators cool down and dehumidify the air flowing past them. The refrigerant absorbs the heat and vaporises.
- **Blower (4)**
  A blower distributes the cooled air within the vehicle through an air outlet unit.

Overview of all parts:

- FJ 2200 (available for models with heating and soft start): fig. **2**, page 12
- FJ 3200: fig. **3**, page 13
- Air outlet unit Chillout ADB: fig. **4**, page 14

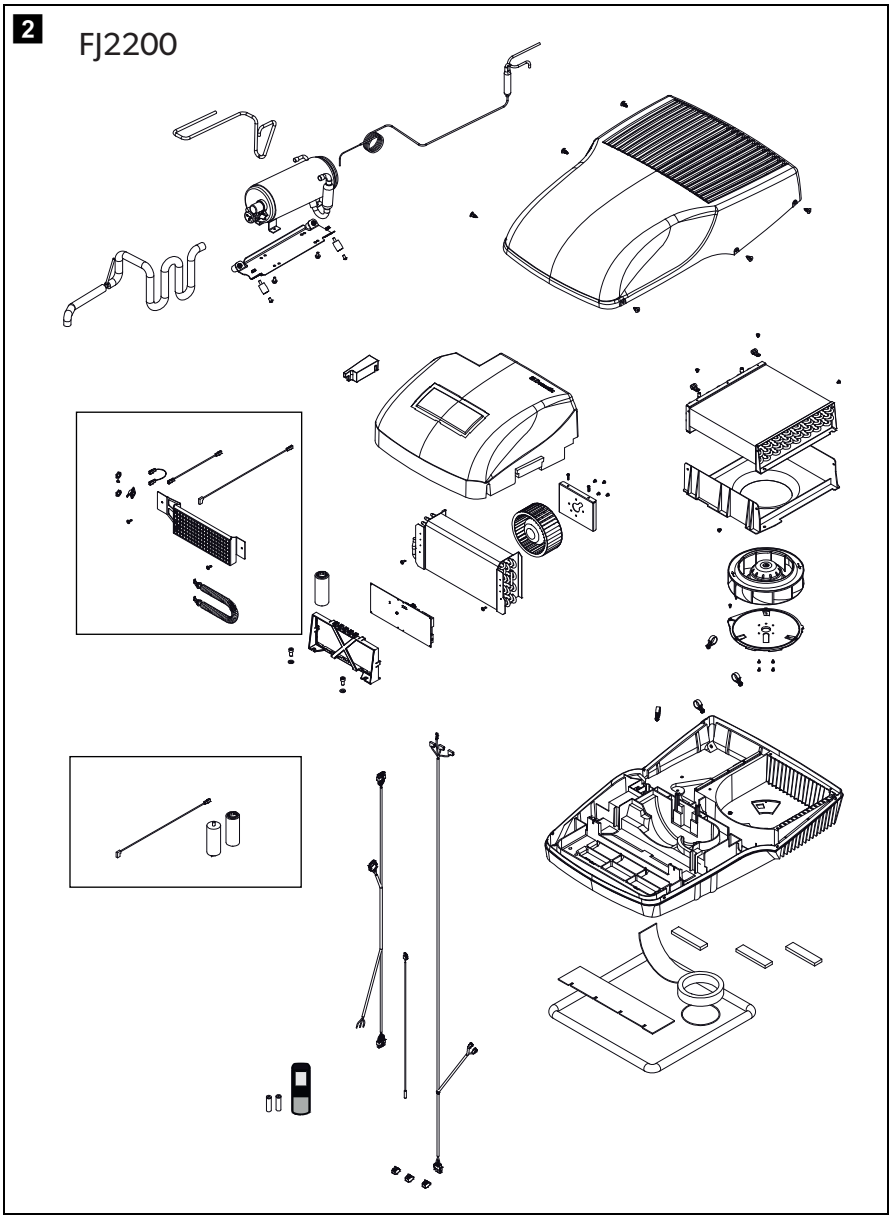
2
FJ2200

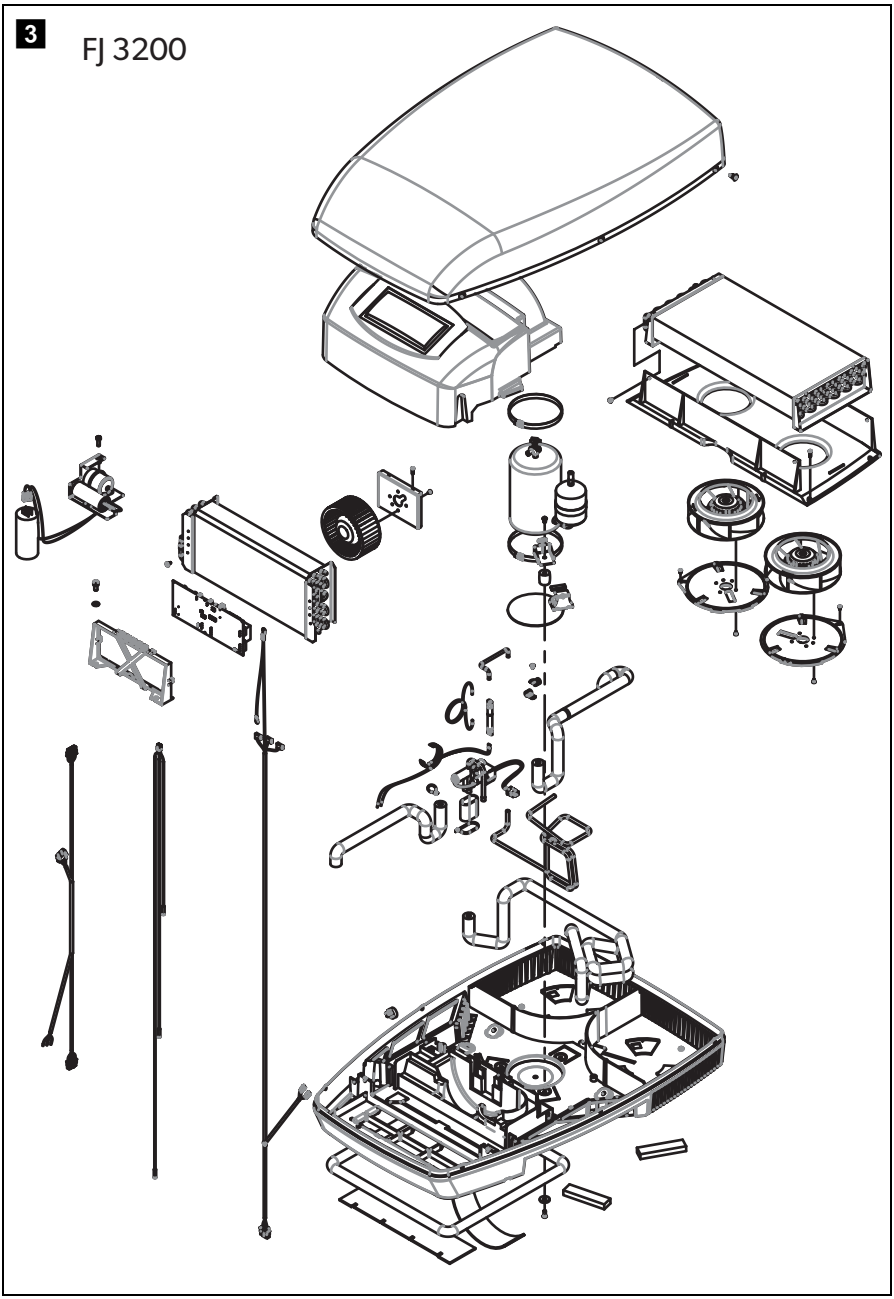
3
FJ 3200

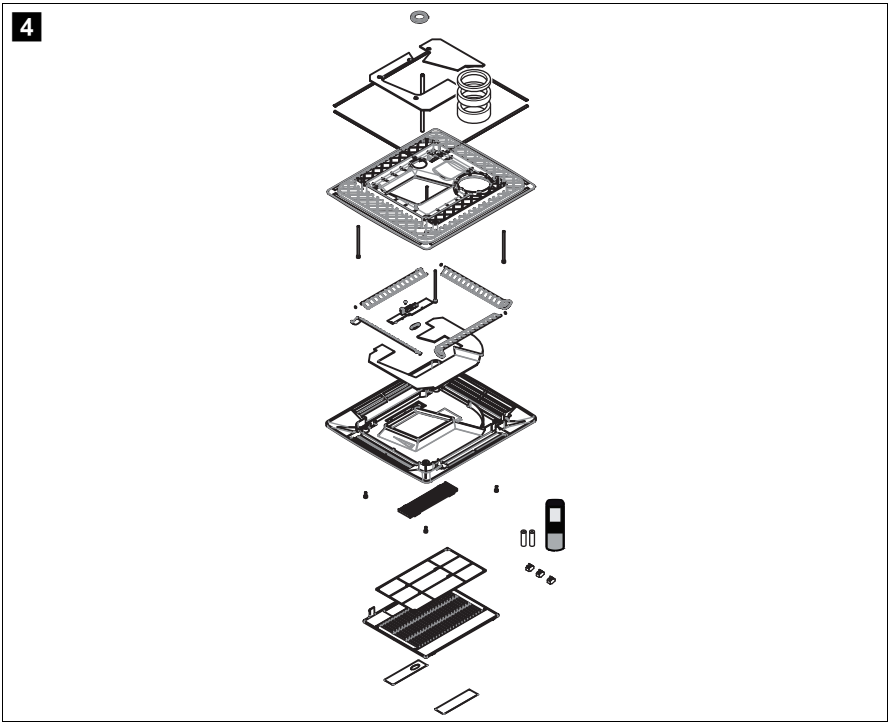
4

6.2 Control panel

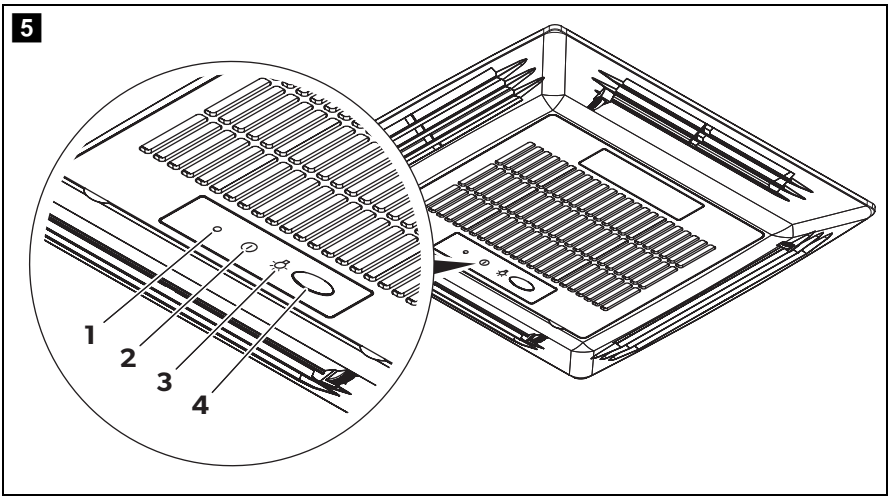

The control panel is at the air outlet unit of the roof air conditioner.

The control panel contains the following control and display elements (fig. **5**, page 15):

No.	Explanation	
1	Status LED	
	No light:	The roof air conditioner is switched off.
	Orange light:	The roof air conditioner is in stand-by mode.
	Green light:	The roof air conditioner is switched on.
	Flashing green light	**For models with heat pump only** The roof air conditioning is preparing for heat mode or defrost is active.
	Flashing green/orange:	The roof air conditioner is in winter mode.
	Red light:	Only if the system is connected to 12 V⎓: the supply voltage of 230 V~ is not available.
	Flashing red:	Over-voltage The roof air conditioner resumes normal service when the supply voltage is within the allowed range.
	Slowly flashing red light:	Malfunction in interior temperature sensor E1
	Quickly flashing red light:	Malfunction in exterior temperature sensor E2
2	⏻ button	Switches the roof air conditioner on, off or to stand-by mode Pressing the button longer engages the automatic mode.
3	💡 button	Switches the light on or off or dims it. Only active when the roof air conditioner is switched on or on stand-by.
4	Infrared receiver for the remote control	

6.3 Remote control

All settings of the device (e. g. temperature settings, timer programming) are transmitted to the roof air conditioner by remote control.

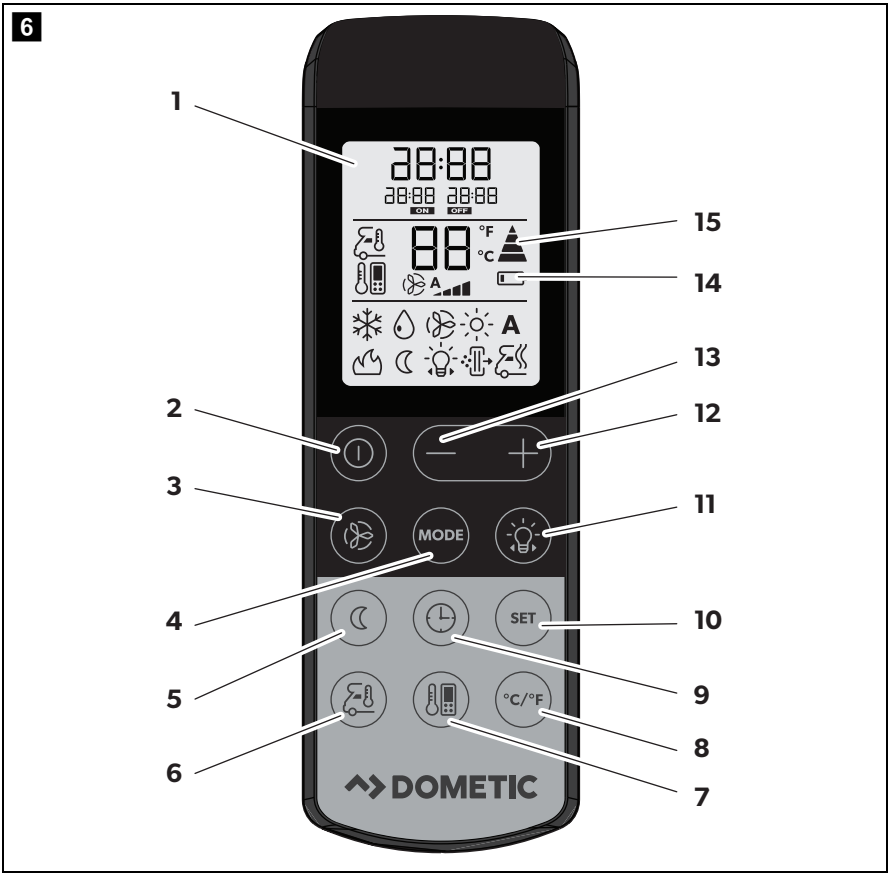

The following control and display elements are available on the remote control (fig. **6**, page 17):

No.	Explanation
1	**Digital display** Displays the following: • Time • Selected room temperature (target value) in °C or °F • Actual room temperature • Air conditioning mode • Blower level • Symbols for active additional functions • Battery status
2	button Switches the air conditioner and remote control on or to stand-by mode
3	button Selects the blower setting
4	**MODE** button Selects the air conditioning mode
5	button Activates the sleep function. The sleep function automatically modifies the target value to provide a pleasant sleeping temperature.
6	button Press once: Displays the current interior temperature (symbol is displayed). Press again: Displays the set temperature.
7	button Activates the "I feel" function. Every 10 minutes, the "I feel" function adjusts the target temperature to the temperature measured by the remote control.
8	**°C/°F** button Switches between temperature units Celsius (°C) and Fahrenheit (°F)
9	button Sets the timer and the clock
10	**SET** button Confirms and saves settings

No.	Explanation
11	button Switches the light of the air conditioner on or off and activates the dimming function. The button remains functional even when the remote control is switched off.
12	**+** button Increases the value
13	**–** button Reduces the value
14	Symbol (batteries empty) Is displayed when the batteries in the remote control are empty. If this happens, replace the batteries, see chapter "Replacing the remote control batteries" on page 33.
15	Symbol (transmitting values) Is displayed briefly when the remote control is transmitting values to the air conditioner.

6.4 Air conditioning modes

The roof air conditioner has the following air conditioning modes:

Air conditioning mode	Display message	Explanation
Automatic	A	You specify the temperature, and the air conditioner brings the interior to this temperature by heating (available for models with heating only) or cooling and by controlling the necessary blower output. The button is deactivated in this mode.
Cooling		You specify the temperature and blower settings, and the air conditioner cools the interior to this temperature.
Heating		**Available for models with heating only** You specify the temperature and blower settings, and the air conditioner heats the interior to this temperature.
Circulating air		You specify the blower level, and the air conditioner blows air into the interior.
Dehumidification		You specify the temperature, and the air conditioner cools the interior to this temperature and controls the necessary blower output and dehumidifies the interior (Circulating air mode). The button is deactivated in this mode.

6.5 Additional functions

The roof air conditioner has the following additional functions:

Additional function	Display message	Explanation
Timer	8:00 ON	The air conditioner is switched on at the specified time.
	20:00 OFF	The air conditioner is switched off at the specified time.
	8:00 ON 20:00 OFF	The air conditioner is switched on and off at the specified times.
Sleep		The set temperature is modified by 1 °C after one hour and by 2 °C after two hours to generate a pleasant temperature for sleeping.
I feel		The remote control measures the room temperature and transmits this measurement to the air conditioner every 10 minutes. The air conditioner adapts the target value to this measurement.
Winter mode		The winter mode avoids the icing inside the vehicle during the winter storage. The winter mode is displayed by green/orange flashing of the LED.

7 Before initial use

Inspection before starting up

Before you switch on the roof air conditioner, observe the following:

➤ Check whether the supply voltage and frequency correspond to the values specified in the technical data, see page 42.

➤ Ensure both the air intake opening and the air nozzles are free. All ventilation grilles must always be kept free to ensure that the roof air conditioner is able to operate at maximum capacity.

CAUTION! Beware of injury
Do not insert your fingers or objects into the air nozzles or the intake grille.

Setting the time

➤ Set the current time: see chapter "Setting the time" on page 33.

Set the remote control

➤ Insert the batteries (see chapter "Replacing the remote control batteries" on page 33).

✓ The display shows all symbols for 5 seconds.

➤ Press simultaneously the button and the button during this 5 seconds.

✓ The display shows the default model number.

➤ Press simultaneously **+** and **–** button within 3 seconds to select the model number:
– FreshJet: 07

✓ The display shows all symbols for 5 seconds.

✓ The remote control is ready for operation.

8 Operating the roof air conditioner

8.1 Basic notes on operation

The roof air conditioner has four operating modes:

Operating mode	Features
Off	The roof air conditioner is switched off. The remote control is inactive.
Stand-by	The roof air conditioning is ready for operation and can be switched on with the remote control. The lights are available.
On	The roof air conditioner is conditioning the air in the interior.
Winter mode	The roof air conditioner operates in a special heating mode that starts at a temperature of 7 °C and stops when the temperature rises above 10 °C. The winter mode avoids icing inside the vehicle during the winter storage.

You can use the **control panel** to

- switch the roof air conditioner on, off, to stand-by mode or to winter mode
- switch the light on and off or dim it

You can use the **remote control** to

- switch the roof air conditioner to and from stand-by mode.
- switch the light on and off or dim it
- make the settings
- select additional functions

8.2 Using the remote control

There are two ways to control the roof air conditioner with the remote control:

- You can transmit the values directly to the roof air conditioner when you set them
- You can first specify all values on the remote control and then transmit them collectively to the roof air conditioner

Transmitting values directly when they are set

The remote control **must** be pointed at the IR receiver (fig. **5**, page 15) on the control panel during operation.

When a button is pressed, the value is transmitted directly to the roof air conditioner. The roof air conditioner confirms the receipt of data with a high note.

Specifying values and transmitting them collectively to the roof air conditioner

The remote control **may not** be pointed at the IR receiver (fig. **5**, page 15) on the control panel during operation.

Specify the required values on the remote control. Once you have made all your settings, point the remote control to the IR receiver on the control panel and press the **SET** button. This transmits the data to the roof air conditioner. The roof air conditioner confirms the receipt of data with a high note.

Switching only the remote control to or from stand-by

In stand-by mode, the remote control display shows only the time.

If the remote control is not pointing to the IR receiver (fig. **5**, page 15) on the control panel, you can activate the remote control or switch it to stand-by independently from the roof air conditioner:

➤ Press the ⏻ button.

8.3 Hint for improved use

The following hints will optimise the performance of your roof air conditioner:

- Improve the heat insulation of your vehicle by sealing gaps and hanging reflective blinds or curtains on your windows.
- If the vehicle has been subjected to direct sunlight for a long time: Operate the roof air conditioner in the "Circulating air" (🌀) mode with the windows open for a while before switching on the "Cooling" (❄) air conditioning mode.
- Avoid opening doors and windows as far as possible in the "Cooling" (❄) mode.
- Select an appropriate temperature and blower speed.
- Align the air nozzles sensibly.
- Make sure the air nozzles and intake grille are not covered by cloths, paper or other objects.

8.4 Switching the roof air conditioner on and off

NOTE
When it is switched on, it begins to condition the air to the values that were set most recently.

With the control panel

The figure shows how to use the control panel to switch the roof air conditioner on, off or to stand-by. Press the ⏻ button as shown in the illustration:

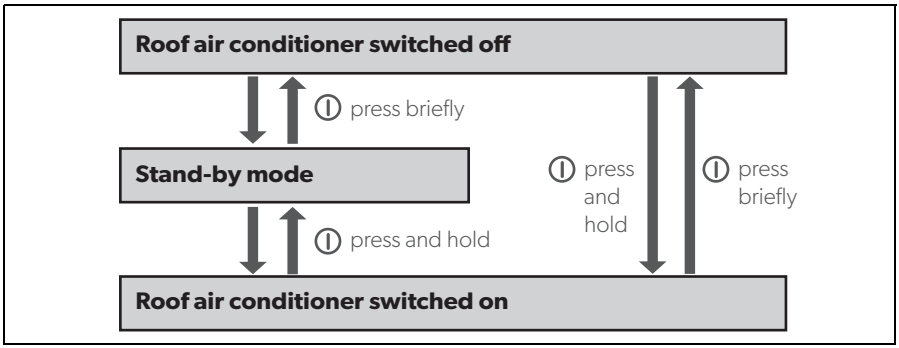

Example: The roof air conditioner is in stand-by mode. You want to switch it off.

➤ Briefly press the ⏻ button.

✓ The roof air conditioner is switched off.

With the remote control

NOTE
- The roof air conditioner can only be operated by the remote control when it is switched on or in stand-by mode.
- You can use the remote control to switch the roof air conditioner to and from stand-by mode. Press the ⏻ button.
- Available for models with heating only:
  If you switch of the roof air conditioner from the "Heating" (☼) mode using the remote control the blower continues working for a few minutes to avoid an overheating of the device. The LED flashes orange. Press the ⏻ button of the control panel to completely switch off the roof air conditioner.

8.5 Selecting the air conditioning mode

➤ Select the air conditioning mode of your choice using the **MODE** key, see chapter "Air conditioning modes" on page 20.

✓ The roof air conditioner confirms the receipt of the values with a high note.

✓ The roof air conditioner is switched to the selected air conditioning mode.

8.6 Selecting the blower setting manually

The blower controls the strength of the air supply.

In the "Cooling" (❄) and "Circulating air"(🌀) modes, the blower levels can be selected manually. In the other air conditioning modes, the roof air conditioner controls the blower level automatically.

Display message	Explanation
🌀 ▂□□□	Low blower level **not** available in the "Heating" (☼) mode
🌀 ▂▃□□	Medium blower level
🌀 ▂▃▄□	High blower level
🌀 ▂▃▄▅	Highest blower level
🌀 **A**	Automatic mode, only available in the "Cooling" (❄), "Heating" (☼) and "Dehumidifying" (💧) modes.

➤ Use the 🌀 button to select the desired blower level.

✓ The roof air conditioner confirms the receipt of the values with a high note.

✓ The new blower level has been set.

8.7 Setting the temperature

Cooling Mode

In the "Automatic" (A), "Cooling" (❄), and "Dehumidifying" (💧) modes, you can specify a temperature between 16 °C and 31 °C via the remote control.

➤ Use the **+** or **–** button to select the desired temperature.

✓ The roof air conditioner confirms the receipt of the values with a high note.

✓ The temperature is set on the roof air conditioner.

Heating Mode (available for models with heating only)

In the "Automatic" (A) and "Heating" (☼) modes, you can specify a temperature between 16 °C and 31 °C via the remote control.

➤ Use the **+** or **–** button to select the desired temperature.

✓ The roof air conditioner confirms the receipt of the values with a high note.

✓ The temperature is set on the roof air conditioner.

8.8 Adjusting the air nozzles

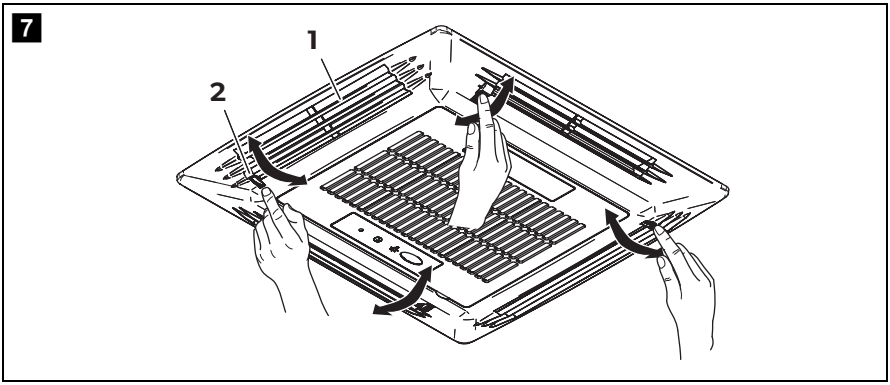

The air supply within the vehicle can be regulated by setting the air nozzles (fig. 7).

➤ **Chillout ADB:** Turn the slats (**1**) in the air nozzles in the required direction using the thumb wheel (**2**).

8.9 Setting the timer

The timer function allows you to set a specific time period for air conditioning. You can specify the switch-on time, the switch-off time or both values.

NOTE
The remote control returns to its initial mode if no button is pressed on the remote control for 15 seconds while programming the timer.

➤ Before programming the timer, select the air conditioning mode and all required values (e.g. temperature).

Setting the switch-on time

➤ Press the button once.

✓ The **ON** symbol (8:00 ON) flashes on the display of the remote control.

➤ Use the **+** or **–** button to set the time when the roof air conditioner is to switch on.

➤ Press the **SET** button to transmit the value to the roof air conditioner.

✓ The switch-on time is set on the roof air conditioner.
The roof air conditioner is switched on with the selected air conditioning mode at the specified time.

➤ Switch the roof air conditioner to stand-by.

Setting the switch-off time

➤ Press the button twice.

✓ The **OFF** symbol (20:00 OFF) flashes on the display of the remote control.

➤ Use the **+** or **–** button to set the time when the roof air conditioner is to switch off.

➤ Press the **SET** button to transmit the value to the roof air conditioner.

✓ The switch-off time is set on the roof air conditioner.
The roof air conditioner runs in the selected air conditioning mode until the specified time.

Setting the switch-on and switch-off times

➤ Press the ⏲ button three times.

✓ The **ON** symbol (8:00 ON) flashes on the display of the remote control.
The **OFF** symbol (20:00 OFF) is displayed.

➤ Use the **+** or **–** button to set the time when the roof air conditioner is to switch on.

➤ Press the ⏲ button again.

✓ The **OFF** symbol (20:00 OFF) flashes on the display of the remote control.

➤ Use the **+** or **–** button to set the time when the roof air conditioner is to switch off.

➤ Press the **SET** button to transmit the value to the roof air conditioner.

✓ The switch-on and switch-off times are set on the roof air conditioner.
The roof air conditioner starts in the selected air conditioning mode at the specified time and runs until the second specified time.

➤ Switch the roof air conditioner to stand-by.

Cancelling timer settings

If you have set the timer, you can cancel these settings as follows:

➤ Press the ⏲ button four times.

✓ The timer symbol disappears.

✓ The setting has been cancelled.

8.10 Activating the sleep function

NOTE
The sleep function is deactivated in “Circulating air” (⊛) mode.

When the sleep function is activated, the set temperature is modified by 1 °C after one hour and by 2 °C after two hours to ensure a pleasant temperature for sleeping.

➤ Set the required temperature (see chapter “Setting the temperature” on page 27).

➤ Press the ☾ button.

✓ The ☾ symbol appears in the display.
The sleep function is activated.

➤ To deactivate the sleep function press the ☾ button again.

NOTE
The sleep function is deactivated if the **MODE** button is pressed.

8.11 Activating the "I feel" function

When this function is active, the remote control measures the room temperature and transmits this measurement to the roof air conditioner every 10 minutes. The roof air conditioner adapts the target value to this measurement. The "I feel" function is only active when the temperature range is between +18 °C and +29 °C.

➤ Press the button.

✓ The symbol appears in the display.
The "I feel" function is activated.

➤ Position the remote control so that it points at the IR receiver (fig. 5, page 15) on the control panel. Otherwise, the values cannot be transmitted to the roof air conditioner.

NOTE
The remote control should not be kept in a part of the room that is considerably warmer or colder than the average room temperature. It may not, for example, be left in the sun or in front of the roof air conditioner.

When the temperature rises above +29 °C or falls below +18 °C, the "I feel" function is deactivated.

✓ The symbol flashes three times in the display and then turns off.

8.12 Operating the lights (depending on the models)

The lights on the roof air conditioner can be dimmed. When switched on, they revert to the most recently specified brightness.

NOTE
The button on the remote control is activate even if the remote control is turned off.

Switching the light on/off with the control panel

➤ Briefly press the button to switch the lamps on or off.

Dimming the light with the control panel

➤ Press and hold the button until the lights have been dimmed to the required brightness.

Switching the light on/off with the remote control

➤ Press the button to switch the lamps on or off.

✓ The symbol appears in the display when the lights are turned **on**.

Dimming the light with the remote control

➤ Press the button for 2 s.

✓ The symbol flashes in the display.

➤ Press and hold the **–** button or the **+** button until the lights have been dimmed to the required brightness.

You can dim the lights to 20 %, 40 %, 60 %, 80 % and 100 %.

➤ Press the button again to disable the dimming function.

✓ The symbol is lit constantly.

8.13 Replacing the remote control batteries

Replace the batteries if you see the symbol on the display.

The battery compartment is on the back of the remote control.

➤ Gently push down the lid of the battery compartment and slide it open in the direction of the arrow.

➤ Insert the new batteries (2x type AAA) in the remote control as indicated in the battery compartment.

➤ Close the cover of the battery compartment.

Protect the environment!
Do not dispose of batteries with general household waste.
Return any used batteries to your retailer or take them to a collection point.

8.14 Setting the time

The remote control needs the current time in order to program the timer. The time is indicated on the display of the remote control.

Perform the following steps to set the time:

NOTE
The remote control returns to its initial mode and saves the current setting, if no key is pressed on the remote control for 15 seconds while setting the time.

➤ Press and hold the button for 2 s.

✓ The time flashes on the display of the remote control.

➤ Use the **+** or **–** button to set the current time.
Press the **+** or **–** button longer than 2 s to increase or decrease the time quicker

➤ Press the **SET** button to confirm the time.

8.15 Setting the winter mode

Activating the winter mode avoids icing inside the vehicle during the winter storage. The winter mode is a special heating mode that starts at a temperature of 7 °C and stops when the temperature rises above 10 °C.

➤ Press both buttons on the control panel board for 5 s to activate the winter mode.

✓ The LED flashes green/yellow.

✓ All other functions are deactivated.

➤ To deactivate the winter mode press the ⏻ button on the control panel to turn off the air conditioner.

9 Cleaning the roof air conditioner

NOTICE! Beware of damage

- Do not clean the roof air conditioner with a high-pressure cleaner. Exposure to water can damage the air conditioner.
- Do not use sharp or hard objects or cleaning agents for cleaning as these may damage the roof air conditioner.
- To clean the roof air conditioner, use water with a gentle cleaning agent. Never use petrol, diesel or solvents.

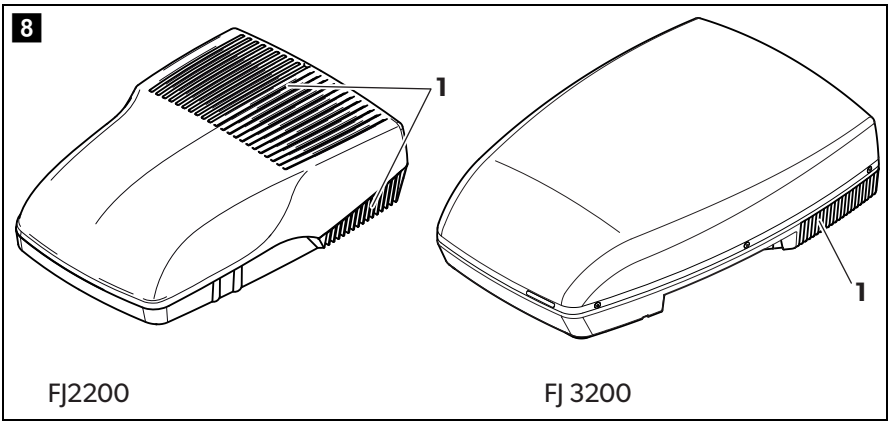

➤ Clean the housing of the roof air conditioner and the air outlet unit occasionally with a damp cloth.

➤ Regularly remove leaves and other dirt from the ventilation grilles (fig. 8 1) of the roof air conditioner. Make sure you do not damage the grilles in the process.

➤ Clean the remote control with a slightly damp cloth from time to time. We recommend using a cleaning cloth for glasses to clean the display.

10 Maintenance of the roof air conditioner

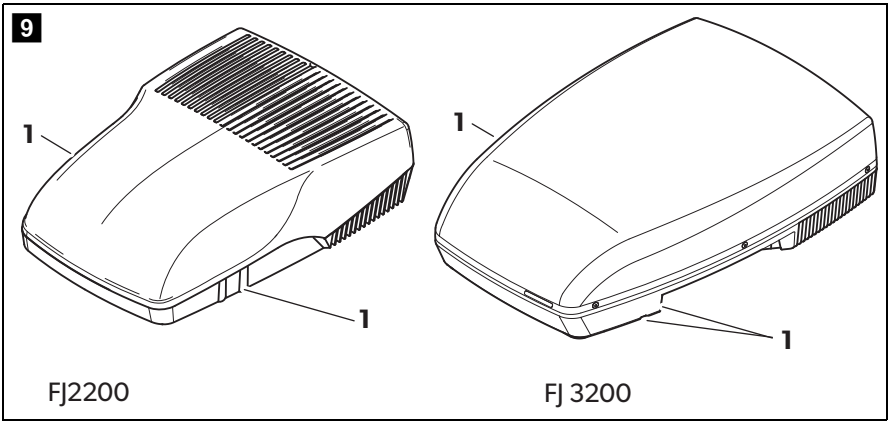

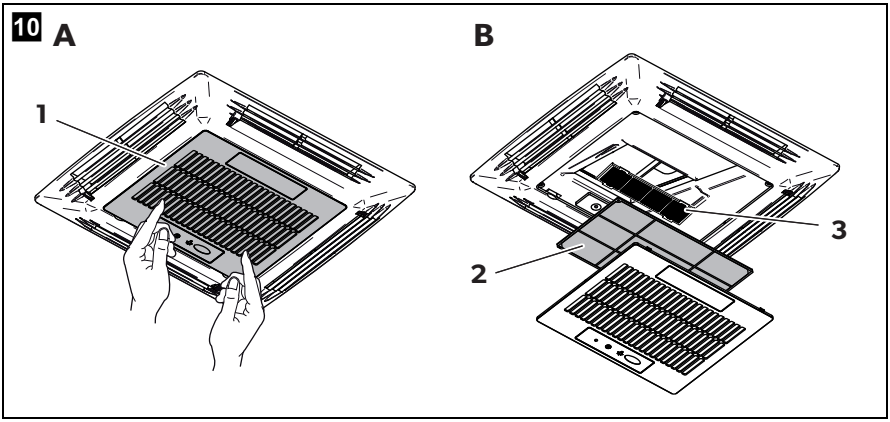

WARNING!
Any other maintenance work to that which is described here may only be carried out by qualified personnel who are familiar with the risks involved when handling refrigerant and air conditioning systems as well as the relevant regulations.

Interval	Inspection/maintenance
Regularly	Check the condensation water drainage: ➤ Check whether the condensation water drainage channels (fig. 9 1page 36) at the sides of the roof air conditioner are clear and the condensation water is able to escape.
Regularly	Clean the filter of the air discharge unit (fig. 10, page 36): ➤ Manually take off the filter cover (**1**). ➤ Remove the filter (**2**). ➤ Clean the filter (**2**) with a detergent solution and let it dry. ➤ Put the dry filter (**2**) back in. ➤ Put the cover (**1**) back on.
Once per year	Check the profile seals: ➤ Check the seal between the roof air conditioner and the roof of the vehicle for cracks and other damage.
Once per year	Have the heat exchanger serviced: ➤ Have the heat exchanger of the roof air conditioner serviced by specialist workshop.
Once per year	Replace the carbon filter (fig. 10, page 36): ➤ Manually take off the filter cover (**1**). ➤ Remove the filter (**2**). ➤ Remove the carbon filter (**3**). ➤ Clean the filter (**2**) with a detergent solution and let it dry. ➤ Put a new carbon filter in. ➤ Put the dry filter (**2**) back in. ➤ Put the cover (**1**) back on.

11 Troubleshooting

Problem	Cause	Remedy
Roof air conditioner constantly switches itself off.	Icing sensor has tripped.	Outer temperature is too low or all air nozzles are closed.
No cooling capacity	The roof air conditioner is not set to cooling.	➤ Set the roof air conditioner to cooling.
	The ambient temperature is above 43 °C.	The roof air conditioner is only designed for ambient temperatures of up to 43 °C.
	The temperature set is higher than the room temperature.	➤ Select a lower temperature.
	The ambient temperature is below 16 °C.	The roof air conditioner is only designed for ambient temperatures above 16 °C.
	One of the temperature sensors is defective.	➤ Contact an authorised workshop.
	The vaporiser fan is damaged.	
	The condenser fan is damaged.	
Low air output	The air intake section is clogged up.	➤ Remove any leaves and other dirt from the ventilation grilles of the roof air conditioner.
	The blower is defective.	➤ Contact an authorised workshop.
Water enters the vehicle	The condensation water drainage openings are clogged up.	➤ Clean the drainage openings for condensation water.
	The seals are damaged.	➤ Contact an authorised workshop.

Problem	Cause	Remedy
Roof air conditioner does not switch on.	No supply voltage (230 V~) connected.	➤ Check the power supply.
	The voltage is too low (under 200 V~). The voltage converter is defective.	➤ Contact an authorised workshop.
	One of the temperature sensors is defective.	
	The electrical fuse of the power supply is too low.	➤ Check the electrical fuse of the power supply.
Roof air conditioner does not switch off.	One of the temperature sensors is defective.	➤ Contact an authorised workshop.
	The electrical fuse of the power supply is too low.	➤ Check the electrical fuse of the power supply.

12 Warranty

The statutory warranty period applies. If the product is defective, please contact the service partner in your country (addresses on the back on the instruction manual).

Our experts will be happy to help you and will discuss the warranty process with you in more detail.

13 Disposal

Regulations for environmental safety and correct disposal

All organisations must apply a set of procedures to identify, evaluate and control the influence that their activities (manufacturing, products, services, etc.) have on the environment.

The procedures to be followed to identify significant environmental impact must take the following factors into account:

- use of raw materials and natural resources
- atmospheric emissions
- discharge of liquids
- waste management and recycling
- contamination of the soil

In order to minimise environmental impact, the manufacturer provides a series of indications here below that should be taken into account by all those who, for whatever reason, interact with the appliance during its working life.

- All packing components must be disposed of (preferably recycled) in compliance with statutory legislation in the country in which disposal takes place.
- All product components must be disposed of (preferably recycled) in compliance with statutory legislation in the country in which disposal takes place.
- For correct disposal, the appliance must be consigned to an authorised waste disposal company to ensure that all recyclable components are reused and the remaining materials are processed properly.
- During installation ensure the room has adequate ventilation to prevent the build-up of stale air that might be harmful to the health of the operators.
- During operation and maintenance ensure that any waste pollutant products (oil, grease, etc.) are disposed of correctly.
- Keep noise levels down to reduce noise pollution.

For more information on correct dismantling of our products please refer to the recycling handbooks at www.dometic.com.

➤ Place the packaging material in the appropriate recycling waste bins wherever possible.

➤ When in operation or undergoing repairs and maintenance work, make sure that the refrigerant circuit is not damaged and refrigerant cannot escape. It acts as a greenhouse gas and should not be allowed into the environment.

Any person who handles or works on equipment containing refrigerant in Australia must have an appropriate refrigerant handling license.

This includes:

- decanting the refrigerant
- manufacturing, installing, commissioning, servicing or maintaining equipment regardless of whether it is charged with refrigerant or not
- decommissioning or disposing of equipment where refrigerant is present

Discharge of refrigerant into the atmosphere is against the law. Severe penalties apply.

If you wish to finally dispose of the product, ask your local recycling centre or specialist dealer for details about how to do this in accordance with the applicable disposal regulations.

➤ Dispose of the product at an official waste disposal facility in accordance with the applicable recycling or disposal guidelines.

Protect the environment!
Do not dispose of any batteries with general household waste.
Return defective or used batteries to your retailer or dispose of them at collection points.

14 Technical data

	FJ 2200	FJ 3200
Ref. no.:	9600021821	9600021822
Compressor cooling capacity:	2200 W	3000 W
Cooling capacity based on ISO 5151:	1800 W	2600 W
Heating capacity:	1200	2400 W
Rated input voltage:	220 – 240 V~ / 50 Hz	
Power consumption in cooling mode:	4.1 A	6.3 A
Power consumption in heating mode:	5.2 A	5.6 A
Operating temperature range Cooling Mode Indoor temperature: Outdoor temperature: Heating Mode Indoor temperature: Outdoor temperature:	 17 °C to 32 °C 17 °C to 43 °C 0 °C to 23 °C 0 °C to 24 °C	 17 °C to 32 °C 17 °C to 43 °C 0 °C to 20 °C 0 °C to 20 °C
Refrigerant:	R-407c	R-410a
Refrigerant quantity:	520 g	735 g
CO_2 equivalent:	0.92248 t	1.53468 t
Global warming potential (GWP):	1774	2088
Blower:	4 blower levels 1 Automatic mode	
Protection class:	IPX4	
Max. volume of space in the vehicle (with insulated walls):	25 m^3	29 m^3
Dimensions L x W x H:	fig. 11, page 43	fig. 12, page 43

Weight:	approx. 32 kg	approx. 37 kg
Inspection/certification:		

Contains fluorinated greenhouse gases

Hermetically sealed equipment

11 FJ2200

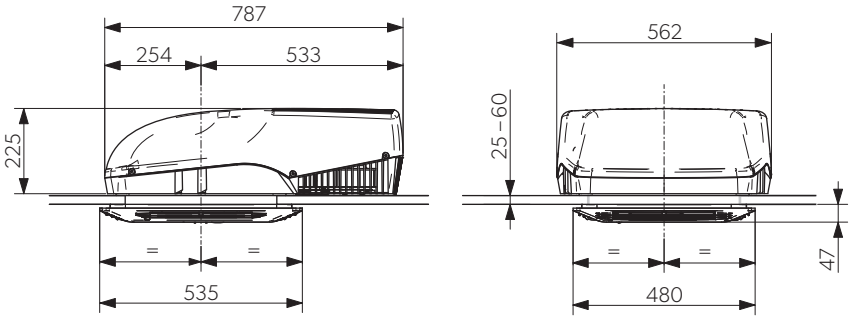

12 FJ 3200

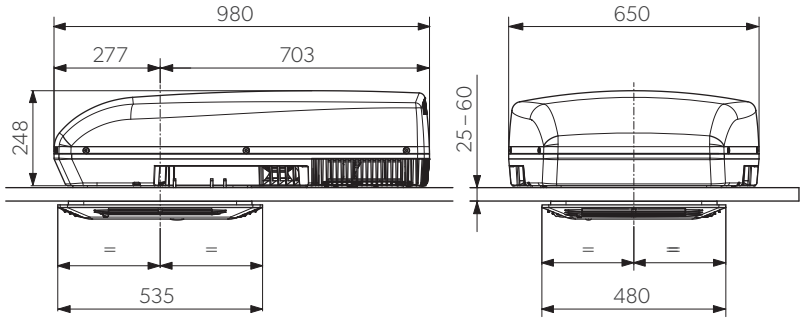

Mobile living made easy.

DOMETIC

dometic.com

YOUR LOCAL DEALER

dometic.com/dealer

YOUR LOCAL SUPPORT

dometic.com/contact

YOUR LOCAL SALES OFFICE

dometic.com/sales-offices

4445102119 01/2020

A complete list of Dometic companies, which comprise the Dometic Group, can be found in the public filings of:
DOMETIC GROUP AB Hemvärnsgatan 15 SE-17154 Solna Sweden